D38999/32 and D38999/33
Composite or Metal Protective Covers
Plug and Receptacle • MIL-DTL-38999 Series III Threaded

MATING CONNECTOR

MIL-DTL-38999, Series III Threaded

APPLICATION NOTES

1. Assembly identified with manufacturer's name and part number, space permitting.
2. For complete dimensions, see the applicable Military Specification.
3. Metric dimensions (mm) are in parentheses.

Basic Part Number
D38999/32 = Plug Cover
D38999/33 = Receptacle Cover

Shell Size Designator

Attachment Style
R or N

D38999/32 W 15 N

Material and Finish
C = Aluminum Anodize
F = Aluminum, Electroless Nickel
H = Stainless Steel, Passivated (Space Grade)
J = Composite, Cadmium Plated, Olive Drab
K = Corrosion-Resistant Steel Passivate
M = Composite, Electroless Nickel Plated
W = Aluminum, 500 Hour Cadmium Olive Drab

C

D38999/32 PLUG COVER

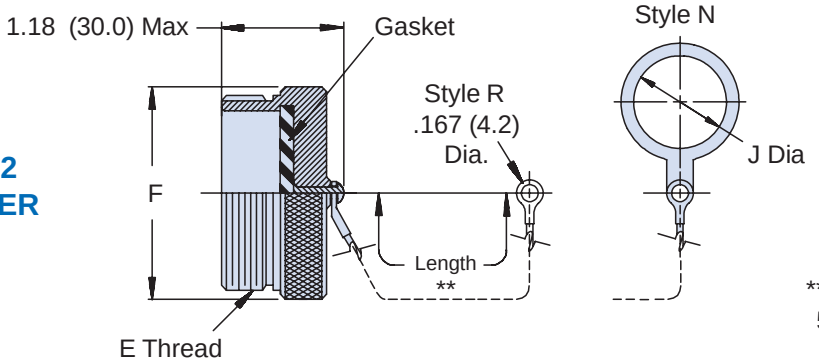

** Rope Length
5.000 (127.0)
+.50 (+13.0)
-.25 (-7.0)

D38999/33 RECEPTACLE COVER

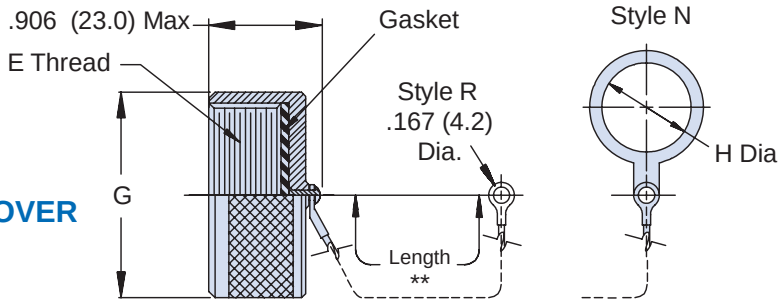

TABLE I: Shell Size, Thread and Dimensions

Shell Size	E Thread	F Max	G Max	H Min	J Min
9	.6250-0.1P-0.3L-TS	.906 (23.0)	.906 (23.0)	.694 (17.6)	.512 (13.0)
11	.7500-0.1P-0.3L-TS	1.024 (26.0)	1.102 (28.0)	.865 (22.0)	.709 (18.0)
13	.8750-0.1P-0.3L-TS	1.220 (31.0)	1.220 (31.0)	.989 (25.1)	.787 (20.0)
15	1.0000-0.1P-0.3L-TS	1.300 (33.0)	1.260 (32.0)	1.178 (29.9)	.906 (23.0)
17	1.1875-0.1P-0.3L-TS	1.457 (37.0)	1.457 (37.0)	1.260 (32.0)	1.024 (26.0)
19	1.2500-0.1P-0.3L-TS	1.575 (40.0)	1.535 (39.0)	1.428 (36.3)	1.142 (29.0)
21	1.3750-0.1P-0.3L-TS	1.732 (44.0)	1.654 (42.0)	1.506 (38.3)	1.260 (32.0)
23	1.5000-0.1P-0.3L-TS	1.811 (46.0)	1.772 (45.0)	1.678 (42.6)	1.339 (34.0)
25	1.6250-0.1P-0.3L-TS	1.969 (50.0)	1.929 (49.0)	1.750 (44.5)	1.535 (39.0)

Dimensions in inches (millimeters) and are subject to change without notice.

© 2013 Glenair, Inc.
U.S. CAGE Code 06324
Printed in U.S.A.