# D38999/32 and D38999/33
## Composite or Metal Protective Covers
### Plug and Receptacle • MIL-DTL-38999 Series III Threaded

**MATING CONNECTOR**

MIL-DTL-38999, Series III Threaded

**APPLICATION NOTES**

1. Assembly identified with manufacturer's name and part number, space permitting.
2. For complete dimensions, see the applicable Military Specification.
3. Metric dimensions (mm) are in parentheses.

**Basic Part Number**
*D38999/32 = Plug Cover*
*D38999/33 = Receptacle Cover*

**Shell Size Designator**

**Attachment Style**
*R or N*

**D38999/32 W 15 N**

**Material and Finish**
*C = Aluminum Anodize*
*F = Aluminum, Electroless Nickel*
*H = Stainless Steel, Passivated (Space Grade)*
*J = Composite, Cadmium Plated, Olive Drab*
*K = Corrosion-Resistant Steel Passivate*
*M = Composite, Electroless Nickel Plated*
*W = Aluminum, 500 Hour Cadmium Olive Drab*

C

**D38999/32 PLUG COVER**

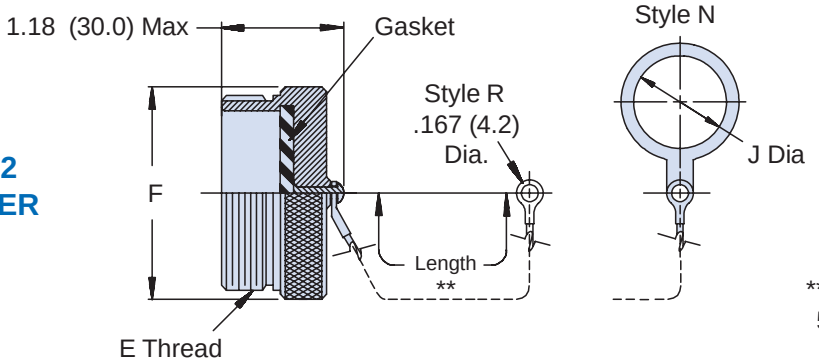


** Rope Length
5.000 (127.0)
+.50 (+13.0)
-.25 (-7.0)

**D38999/33 RECEPTACLE COVER**

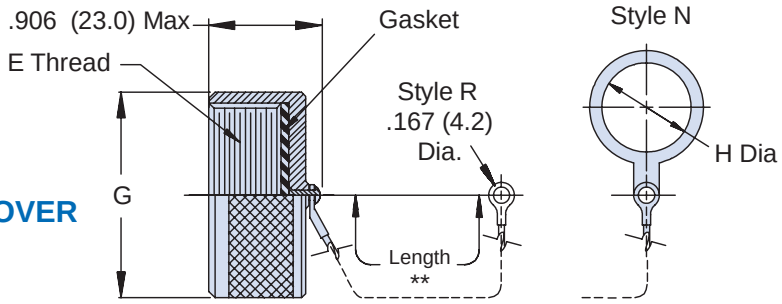


**TABLE I: Shell Size, Thread and Dimensions**

| Shell Size | E Thread | F Max | G Max | H Min | J Min |
|---|---|---|---|---|---|
| 9 | .6250-0.1P-0.3L-TS | .906 (23.0) | .906 (23.0) | .694 (17.6) | .512 (13.0) |
| 11 | .7500-0.1P-0.3L-TS | 1.024 (26.0) | 1.102 (28.0) | .865 (22.0) | .709 (18.0) |
| 13 | .8750-0.1P-0.3L-TS | 1.220 (31.0) | 1.220 (31.0) | .989 (25.1) | .787 (20.0) |
| 15 | 1.0000-0.1P-0.3L-TS | 1.300 (33.0) | 1.260 (32.0) | 1.178 (29.9) | .906 (23.0) |
| 17 | 1.1875-0.1P-0.3L-TS | 1.457 (37.0) | 1.457 (37.0) | 1.260 (32.0) | 1.024 (26.0) |
| 19 | 1.2500-0.1P-0.3L-TS | 1.575 (40.0) | 1.535 (39.0) | 1.428 (36.3) | 1.142 (29.0) |
| 21 | 1.3750-0.1P-0.3L-TS | 1.732 (44.0) | 1.654 (42.0) | 1.506 (38.3) | 1.260 (32.0) |
| 23 | 1.5000-0.1P-0.3L-TS | 1.811 (46.0) | 1.772 (45.0) | 1.678 (42.6) | 1.339 (34.0) |
| 25 | 1.6250-0.1P-0.3L-TS | 1.969 (50.0) | 1.929 (49.0) | 1.750 (44.5) | 1.535 (39.0) |

Dimensions in inches (millimeters) and are subject to change without notice.

© 2013 Glenair, Inc.
U.S. CAGE Code 06324
Printed in U.S.A.