THIS DRAWING IS UNPUBLISHED. RELEASED FOR PUBLICATION -,- .
© COPYRIGHT - By - ALL RIGHTS RESERVED.

LOC	DIST
GP	00

REVISIONS

P	LTR	DESCRIPTION	DATE	DWN	APVD
	G1	REVISED PER ECO-11-004835	11MAR11	RK	HMR

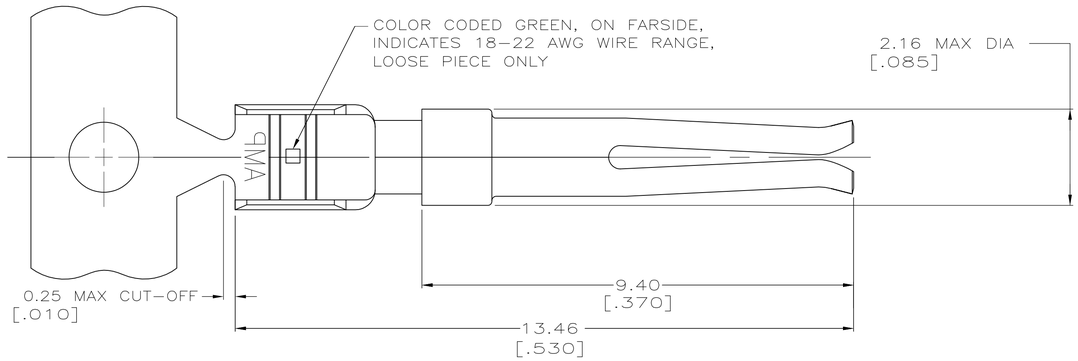

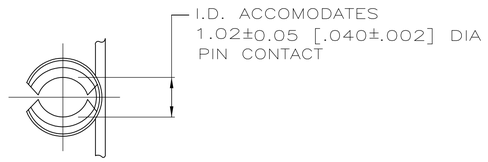

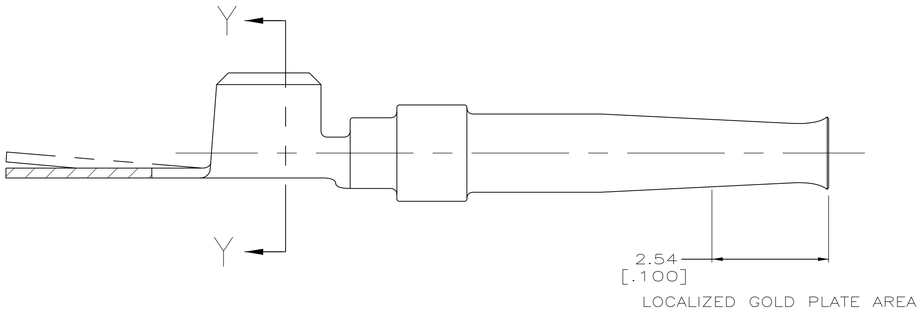

1. FOR MINI-APPLICATOR.
2. PLATED WITH 0.76μm [.000030] GOLD ON INSIDE OF LOCALIZED GOLD PLATE AREA, GOLD FLASH ON REMAINDER, ALL OVER 1.27μm [.000050] NICKEL UNDERPLATE.
   -OR-
   GOLD FLASH OVER PALLADIUM-NICKEL 0.76μm [.000030] TOTAL ON INSIDE OF LOCALIZED GOLD PLATE AREA, GOLD FLASH ON REMAINDER, ALL OVER 1.27μm [.000050] NICKEL UNDERPLATE.
3. GOLD FLASH PER MIL-G-45204 ON INSIDE OF LOCALIZED GOLD PLATE AREA, GOLD FLASH PER MIL-G-45204 ON REMAINDER, ALL OVER 0.76μm [.000030] NICKEL UNDERPLATE PER QQ-N-290.
4. CARRIER STRIP MAY NOT BE GOLD PLATED.
5. MAX. INSULATION DIAMETER ALLOWABLE FOR EXTRACTING CONTACT FROM CONNECTOR WITH 91067-2 TOOL IS 1.73 [.068].
6. PLATED GOLD FLASH PER MIL-G-45204 ON MATING END FOR LENGTH OF 2.54 [.100] TIN PLATED WIRE BARRELS, ALL OVER 0.76μm [.000030] NICKEL PER QQ-N-290.
7. SELECTIVE GOLD PLATED 0.76μm [.000030] THICK PER MIL-G-45204 ON MATING END FOR LENGTH OF 2.54 [.100] TIN PLATED WIRE BARRELS, ALL OVER 1.27 [.000050] NICKEL PER QQ-N-290.
8. LOOSE PIECE PART NUMBERS ARE COLOR CODED.
9. OBSOLETE

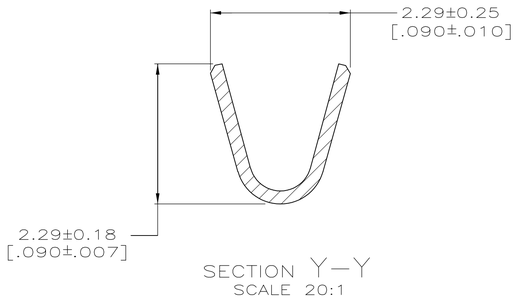

7	9 1-745230-3	9 1-745230-1
6	9 1-745230-0	9 745230-8
3 4	745230-7	745230-5
2 4	745230-4	745230-2
FINISH	LOOSE PIECE PART NO 8	PART NUMBER 1

THIS DRAWING IS A CONTROLLED DOCUMENT.

DIMENSIONS: mm [INCHES]

TOLERANCES UNLESS OTHERWISE SPECIFIED:
0 PLC ± -
1 PLC ± -
2 PLC ± 0.13 [.005]
3 PLC ± -
4 PLC ± -
ANGLES ± -

MATERIAL: PHOS BRONZE
FINISH: SEE TABLE

DWN W. ZELKO 10-3-80
CHK R. BAER 11-3-80
APVD R. LEHMAN 11-5-80
PRODUCT SPEC —
APPLICATION SPEC —
WEIGHT —

TE Connectivity

NAME: CONTACT, SOCKET, SIZE 20 DF, 18-22 AWG

SIZE	CAGE CODE	DRAWING NO	RESTRICTED TO
A1	00779	C-745230	—

CUSTOMER DRAWING | SCALE 15:1 | SHEET 1 OF 1 | REV G1