400-002
TAG® Ring Backshell
with Strain Relief
Direct Coupling - Low Profile

CONNECTOR DESIGNATORS

A-B*-C-D-E-F

G-H-J-K-L-S

*** Conn. Desig. B See Note 5**

DIRECT COUPLING

400 F S 002 M 16 06 L 6

- Product Series
- Connector Designator
- Angle and Profile
  - A = 90°
  - B = 45°
  - S = Straight
- Basic Part No.
- Finish (Table II)
- Shell Size (Table I)
- Cable Entry (Tables V, VI)
- Strain Relief Style (F, G, L)
- Length: S only (1/2 inch increments: e.g. 6 = 3 inches)

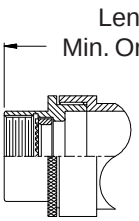

STYLE 2 (STRAIGHT See Note 1)

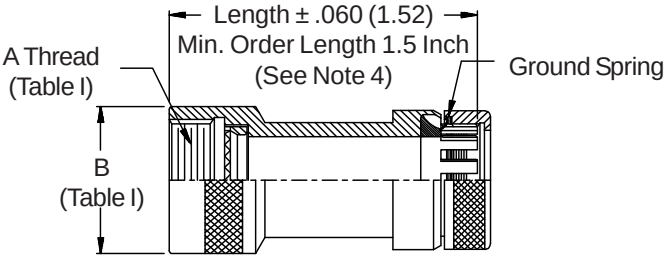

Shown with Style G Nut

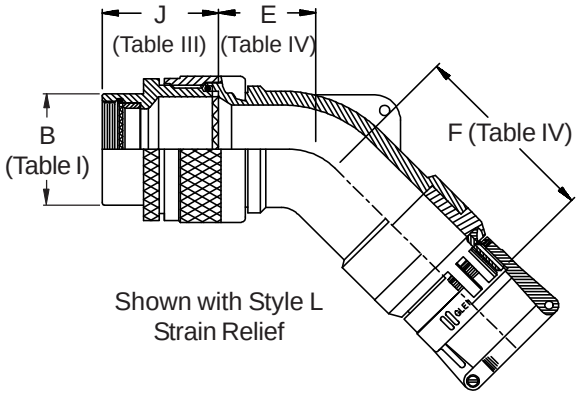

Shown with Style L Strain Relief

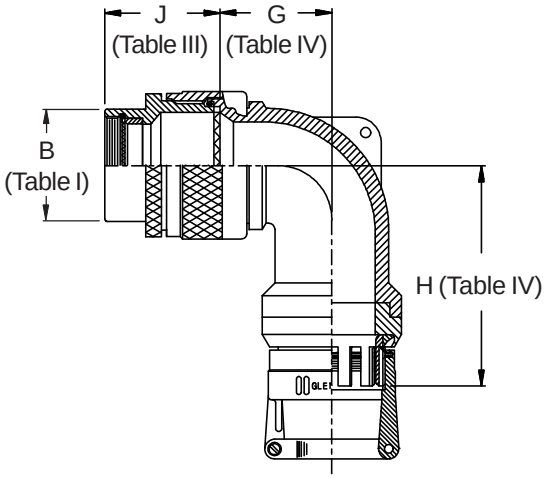

STYLE F
Light Duty
(Table VI)

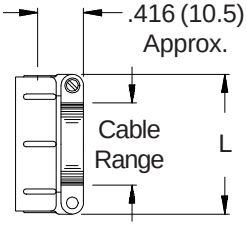

STYLE G
Light Duty
(Table V)

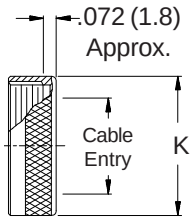

STYLE L
Light Duty
(Table VI)

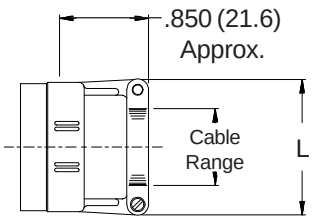

© 2005 Glenair, Inc.

TABLE III: FRONT ADAPTER			
	J Max - Conn. Designator		
Shell Size	A-D-E-F J-H-L-S	B-G-K	C
08/09	1.000 (25.4)	1.250 (31.8)	
10/11	1.000 (25.4)	1.250 (31.8)	
12/13	1.000 (25.4)	1.250 (31.8)	1.735 (44.1)
14/15	1.000 (25.4)	1.250 (31.8)	1.915 (48.6)
16/17	1.000 (25.4)	1.416 (36.0)	1.915 (48.6)
18/19	1.000 (25.4)	1.416 (36.0)	1.915 (48.6)
20/21	1.000 (25.4)	1.416 (36.0)	1.915 (48.6)
22/23	1.000 (25.4)	1.416 (36.0)	1.915 (48.6)
24/25	1.000 (25.4)	1.416 (36.0)	1.915 (48.6)
28/29	1.000 (25.4)	1.416 (36.0)	1.915 (48.6)
32/33	1.000 (25.4)	1.416 (36.0)	1.915 (48.6)
36	1.000 (25.4)	1.416 (36.0)	1.915 (48.6)
40	1.000 (25.4)	1.687 (42.9)	1.915 (48.6)

See inside back cover fold-out or pages 13 and 14 for Tables I and II.

1. When maximum cable entry (page 22) is exceeded, Style 2 will be supplied. (Function S only).
2. Metric dimensions (mm) are indicated in parentheses.
3. Cable range is defined as the accommodations range for the wire bundle or cable. Dimensions shown are not intended for inspection criteria.
4. Consult factory for shorter lengths on straight backshells.
5. When using Connector Designator B refer to pages 18 and 19 for part number development.

TABLE IV: ELBOW DIMENSIONS								
Elbow Size	E Max		F Max		G Max		H Max	
02	.630	(16.0)	1.720	(43.7)	.636	(16.2)	1.670	(42.4)
03	.630	(16.0)	1.720	(43.7)	.709	(18.0)	1.790	(45.5)
04	.692	(17.6)	1.780	(45.2)	.734	(18.6)	1.810	(46.0)
05	.755	(19.2)	1.870	(47.5)	.829	(21.1)	1.880	(47.8)
06	.848	(21.5)	1.970	(50.0)	.990	(25.1)	1.970	(50.0)
07	1.036	(26.3)	2.170	(55.1)	1.000	(25.4)	2.140	(54.4)
08	1.130	(28.7)	2.310	(58.7)	1.325	(33.7)	2.250	(57.2)
09	1.130	(28.7)	2.310	(58.7)	1.325	(33.7)	2.250	(57.2)
10	1.130	(28.7)	2.310	(58.7)	1.325	(33.7)	2.250	(57.2)

TABLE V: CABLE ENTRY				
Dash No.	K Max		Cable Entry Max	
02	.545	(13.8)	.250	(6.4)
03	.670	(17.0)	.375	(9.5)
04	.795	(20.2)	.500	(12.7)
05	.920	(23.4)	.625	(15.9)
06	1.045	(26.5)	.750	(19.1)
07	1.170	(29.7)	.875	(22.2)
08	1.295	(32.9)	1.000	(25.4)
09	1.420	(36.1)	1.125	(28.6)
10	1.670	(42.4)	1.250	(31.8)

TABLE VI: CABLE ENTRY						
Dash No.	L Max		Cable Range Min		Cable Range Max	
02	.968	(24.6)	.125	(3.2)	.250	(6.4)
03	1.046	(26.6)	.250	(6.4)	.375	(9.5)
04	1.156	(29.4)	.250	(6.4)	.500	(12.7)
05	1.218	(30.9)	.375	(9.5)	.625	(15.9)
06	1.343	(34.1)	.500	(12.7)	.750	(19.1)
07	1.468	(37.3)	.625	(15.9)	.875	(22.2)
08	1.593	(40.5)	.625	(15.9)	1.000	(25.4)
09	1.718	(43.6)	.750	(19.1)	1.125	(28.6)
10	1.843	(46.8)	.875	(22.2)	1.250	(31.8)

© 2005 Glenair, Inc.