LUMAWISE LED HOLDER TYPE Z35

13.5*13.5mm and 12*15mm LED Board Sizes

TE Connectivity (TE)'s LUMAWISE LED Holder Type Z35 is suitable for LED board sizes 13.5*13.5mm and 12*15mm from various LED manufacturers. This LED Holder offers higher level of integration via a solderless connection to chip-on-board (COB) LEDs using standard pan-head and countersunk screws. The Type Z35 LED holder enables quick and easy LED assembly through tape-in LED retention and provides easy attachment of secondary optics. The LUMAWISE LED Holder is Zhaga book 11 inspired.

Applications

- Spot Lights
- Track Lights
- Recessed Downlights
- High Bay Lights
- Retrofit Lamps
- Wall Sconces
- Street Lights
- Runway Lights
- Architectural Lighting
- Reading lamps
- Sign and symbol luminaires
- Area and object lighting

Electrical

- Current rating: 3A (max)
- Voltage rating: 60 VDC

Mechanical

- Operating temperature range: -40 to +105˚C
- Uses M3 or #4-40 screws
- Poke-in electrical contact support: 18 AWG and 20 AWG solid, fused and stranded wire
- 35 mm diameter by 3.6 mm height (max)

Specifications

- Product specification: 108-133062
- Application specifications: 114-133062
- UL 8754 approved
- IEC 60838-2-2 approved

Materials

- Halogen free and red phosphorus free plastic housing material
- UL 94 V0 rating

Benefits

- Enable a higher level of integration through a solderless connection
- Achieve quick and easy LED assembly through tape-in LED retention
- Ease termination with integrated poke-in wire termination
- High-reflectivity, halogen free and red phosphorus free plastic housing material

Product Selection Information

Part Number	Description	Attachment
2213678-3	Z35 MINI LED HOLDER 12*15MM	Pan Head Screw
2213678-4	Z35 MINI LED HOLDER 12*15MM	Counter Sunk Screw

Part Number	Description	Attachment
2213678-5	Z35 MINI LED HOLDER 13.5*13.5MM	Pan Head Screw
2213678-6	Z35 MINI LED HOLDER 13.5*13.5MM	Counter Sunk Screw

Dimensions

All dimensions are in mm

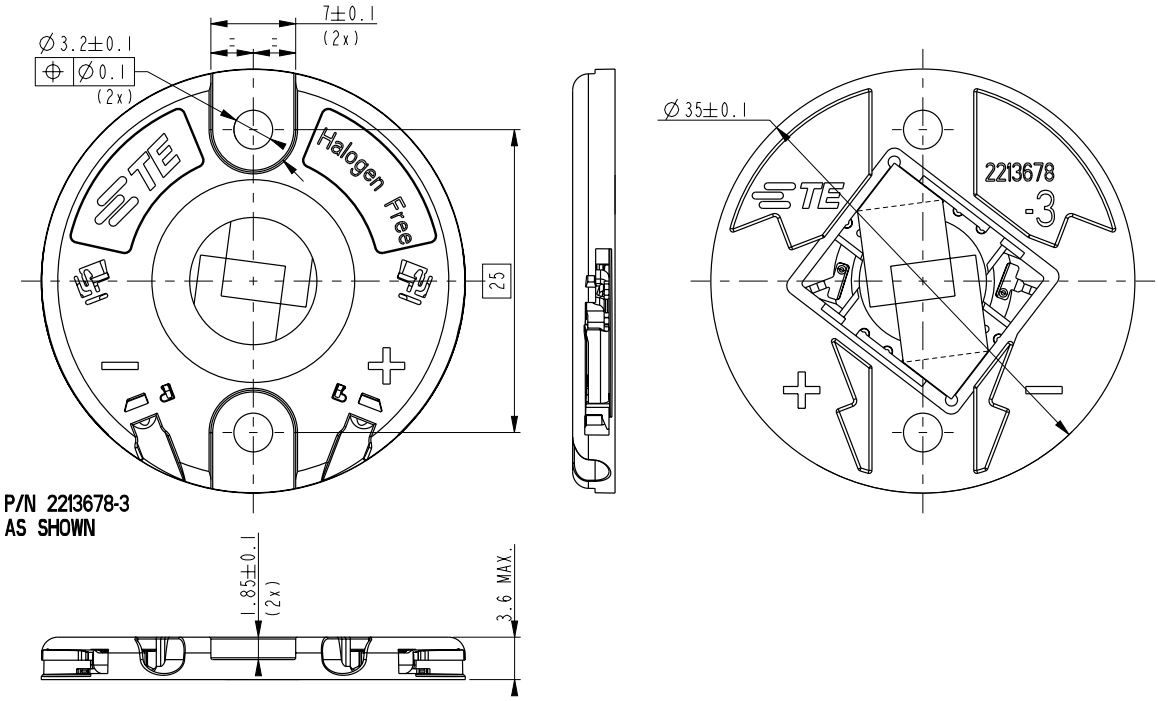

This drawing is subject to change. For latest version, please visit TE.com.

te.com

© 2017 TE Connectivity. All Rights Reserved. TE, TE Connectivity, and the TE connectivity (logo) are trademarks of the TE Connectivity Ltd. family of companies. Other logos, product and Company names mentioned herein may be trademarks of their respective owners.

While TE has made every reasonable effort to ensure the accuracy of the information in this brochure, TE does not guarantee that it is error-free, nor does TE make any other representation, warranty or guarantee that the information is accurate, correct, reliable or current. TE reserves the right to make any adjustments to the information contained herein at any time without notice. TE expressly disclaims all implied warranties regarding the information contained herein, including, but not limited to, any implied warranties of merchantability or fitness for a particular purpose. The dimensions in this catalog are for reference purposes only and are subject to change without notice. Specifications are subject to change without notice. Consult TE for the latest dimensions and design specifications.

1-1773882-6 FS 6/2017

USA: +1 (800) 522-6752
Canada: +1 (905) 475-6222
Mexico: +52 (0) 55-1106-0800
Latin/S. America: +54 (0) 11-4733-2200
Germany: +49 (0) 6251-133-1999
UK: +44 (0) 800-267666
France: +33 (0) 1-3420-8686
The Netherlands: +31 (0) 73-6246-999
China: +86 (0) 400-820-6015