AUTOMOTIVE GRADE

AUIRF4905S
AUIRF4905L

HEXFET® Power MOSFET

Features

- Advanced Planar Technology
- P-Channel MOSFET
- Low On-Resistance
- 150°C Operating Temperature
- Fast Switching
- Repetitive Avalanche Allowed up to Tjmax
- Lead-Free, RoHS Compliant
- Automotive Qualified *

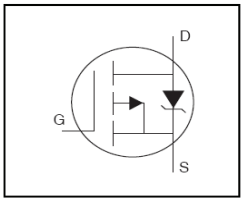

V_{DSS}	-55V
$R_{DS(on)}$ max.	20mΩ
I_{D} (Silicon Limited)	-70A
I_{D} (Package Limited)	-42A

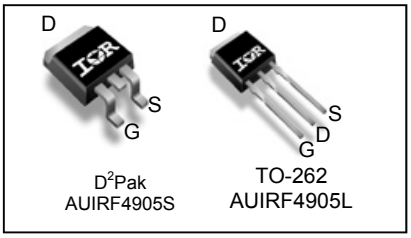

G	D	S
Gate	Drain	Source

Description

Specifically designed for Automotive applications, this cellular design of HEXFET® Power MOSFETs utilizes the latest processing techniques to achieve low on-resistance per silicon area. This benefit combined with the fast switching speed and ruggedized device design that HEXFET power MOSFETs are well known for, provides the designer with an extremely efficient and reliable device for use in Automotive and a wide variety of other applications.

Base part number	Package Type	Standard Pack		Orderable Part Number
		Form	Quantity	
AUIRF4905L	TO-262	Tube	50	AUIRF4905L
AUIRF4905S	D^2-Pak	Tube	50	AUIRF4905S
		Tape and Reel Left	800	AUIRF4905STRL

Absolute Maximum Ratings

Stresses beyond those listed under "Absolute Maximum Ratings" may cause permanent damage to the device. These are stress ratings only; and functional operation of the device at these or any other condition beyond those indicated in the specifications is not implied. Exposure to absolute-maximum-rated conditions for extended periods may affect device reliability. The thermal resistance and power dissipation ratings are measured under board mounted and still air conditions. Ambient temperature (TA) is 25°C, unless otherwise specified.

Symbol	Parameter	Max.	Units
I_D @ T_C = 25°C	Continuous Drain Current, V_{GS} @ 10V (Silicon Limited)	-70	A
I_D @ T_C = 100°C	Continuous Drain Current, V_{GS} @ 10V (Silicon Limited)	-44	
I_D @ T_C = 25°C	Continuous Drain Current, V_{GS} @ 10V (Package Limited)	-42	
I_{DM}	Pulsed Drain Current ①	-280	
P_D @T_C = 25°C	Maximum Power Dissipation	170	W
	Linear Derating Factor	1.3	W/°C
V_{GS}	Gate-to-Source Voltage	± 20	V
E_{AS}	Single Pulse Avalanche Energy (Thermally Limited) ②	140	mJ
E_{AS} (tested)	Single Pulse Avalanche Energy Tested Value ⑥	790	
I_{AR}	Avalanche Current ①	See Fig.15,16, 12a, 12b	A
E_{AR}	Repetitive Avalanche Energy ①		mJ
T_J T_{STG}	Operating Junction and Storage Temperature Range	-55 to + 150	°C
	Soldering Temperature, for 10 seconds (1.6mm from case)	300	

Thermal Resistance

Symbol	Parameter	Typ.	Max.	Units
$R_{\theta JC}$	Junction-to-Case ⑧	——	0.75	°C/W
$R_{\theta JA}$	Junction-to-Ambient (PCB Mount, steady state) ⑦⑧		40	

HEXFET® is a registered trademark of Infineon.

*Qualification standards can be found at www.infineon.com

Static @ T_J = 25°C (unless otherwise specified)

	Parameter	Min.	Typ.	Max.	Units	Conditions
$V_{(BR)DSS}$	Drain-to-Source Breakdown Voltage	-55	——	——	V	V_{GS} = 0V, I_D = -250μA
$\Delta V_{(BR)DSS}/\Delta T_J$	Breakdown Voltage Temp. Coefficient	——	-0.054	——	V/°C	Reference to 25°C, I_D = -1mA
$R_{DS(on)}$	Static Drain-to-Source On-Resistance	——	——	20	mΩ	V_{GS} = -10V, I_D = -42A ③
$V_{GS(th)}$	Gate Threshold Voltage	-2.0	——	-4.0	V	V_{DS} = V_{GS}, I_D = -250μA
gfs	Forward Trans conductance	19	——	——	S	V_{DS} = -25V, I_D = -42A
I_{DSS}	Drain-to-Source Leakage Current	——	——	-25	μA	V_{DS} = -55V, V_{GS} = 0V
		——	——	-250		V_{DS} = -44V,V_{GS} = 0V,T_J =125°C
I_{GSS}	Gate-to-Source Forward Leakage	——	——	-100	nA	V_{GS} = -20V
	Gate-to-Source Reverse Leakage	——	——	100		V_{GS} = 20V

Dynamic Electrical Characteristics @ T_J = 25°C (unless otherwise specified)

Q_g	Total Gate Charge	——	120	180	nC	I_D = -42A
Q_{gs}	Gate-to-Source Charge	——	32	——		V_{DS} = -44V
Q_{gd}	Gate-to-Drain Charge	——	53	——		V_{GS} = -10V③
$t_{d(on)}$	Turn-On Delay Time	——	20	——	ns	V_{DD} = -28V
t_r	Rise Time	——	99	——		I_D = -42A
$t_{d(off)}$	Turn-Off Delay Time	——	51	——		R_G= 2.6Ω,
t_f	Fall Time	——	64	——		V_{GS} = -10V ③
L_D	Internal Drain Inductance	——	4.5	——	nH	Between lead, 6mm (0.25in.) from package and center of die contact
L_S	Internal Source Inductance	——	7.5	——		
C_{iss}	Input Capacitance	——	3500	——	pF	V_{GS} = 0V
C_{oss}	Output Capacitance	——	1250	——		V_{DS} = -25V
C_{rss}	Reverse Transfer Capacitance	——	450	——		f = 1.0MHz
C_{oss}	Output Capacitance	——	4620	——		V_{GS} = 0V,V_{DS} = -1.0V f = 1.0MHz
C_{oss}	Output Capacitance	——	940	——		V_{GS} = 0V,V_{DS} = -44V f = 1.0MHz
$C_{oss\ eff.}$	Effective Output Capacitance	——	1530	——		V_{GS} = 0V, V_{DS} = 0V to -44V ④

Diode Characteristics

	Parameter	Min.	Typ.	Max.	Units	Conditions
I_S	Continuous Source Current (Body Diode)	——	——	-42	A	MOSFET symbol showing the integral reverse p-n junction diode. 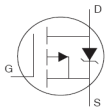
I_{SM}	Pulsed Source Current (Body Diode) ①	——	——	-280		
V_{SD}	Diode Forward Voltage	——	——	-1.3	V	T_J = 25°C,I_S = -42A,V_{GS} = 0V ③
t_{rr}	Reverse Recovery Time	——	61	92	ns	T_J = 25°C ,I_F = -42A , V_{DD} = -28V
Q_{rr}	Reverse Recovery Charge	——	150	220	nC	di/dt = 100A/μs ③
t_{on}	Forward Turn-On Time	Intrinsic turn-on time is negligible (turn-on is dominated by L_S+L_D)				

Notes:

① Repetitive rating; pulse width limited by max. junction temperature. (See fig.11)
② Limited by $T_{Jmax,}$ starting T_J = 25°C, L = 0.16mH, R_G = 25Ω, I_{AS} = -42A, V_{GS} =-10V. Part not recommended for use above this value.
③ Pulse width ≤ 1.0ms; duty cycle ≤ 2%.
④ C_{oss} eff. is a fixed capacitance that gives the same charging time as C_{oss} while V_{DS} is rising from 0 to 80% V_{DSS}.
⑤ Limited by T_{Jmax} , see Fig.12a, 12b, 15, 16 for typical repetitive avalanche performance.
⑥ This value determined from sample failure population, starting T_J = 25°C, L = 0.08mH, R_G = 25Ω, I_{AS} = 66A, V_{GS} =10V.
⑦ This is applied to D^2 Pak, When mounted on 1" square PCB (FR-4 or G-10 Material). For recommended footprint and soldering techniques refer to application note #AN-994
⑧ R_θ is measured at T_J of approximately 90°C

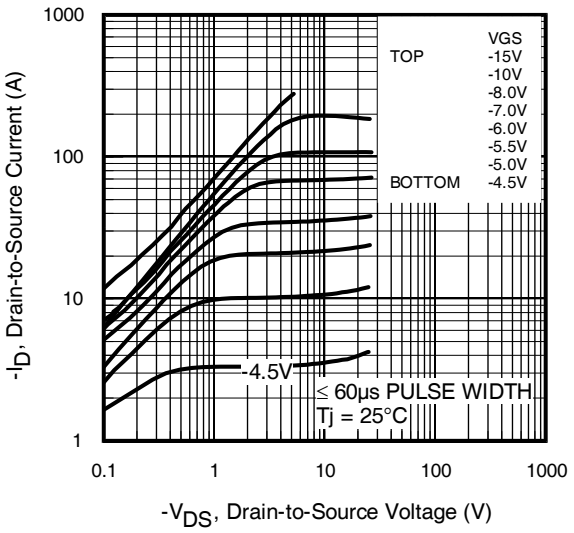

Fig. 1 Typical Output Characteristics

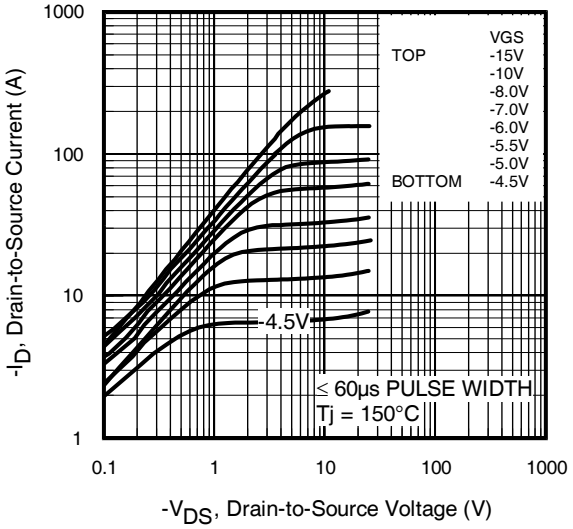

Fig. 2 Typical Output Characteristics

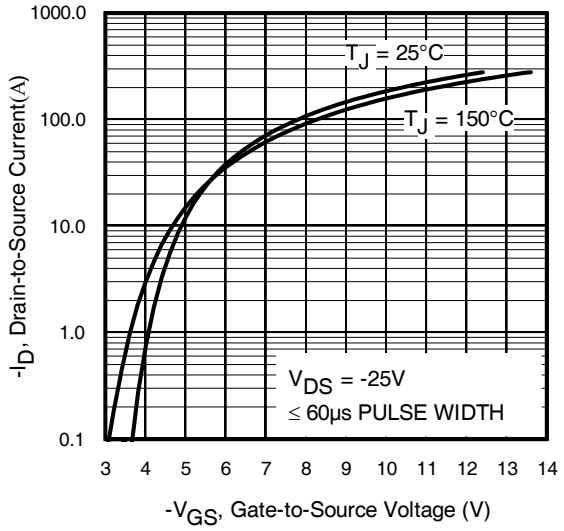

Fig. 3 Typical Transfer Characteristics

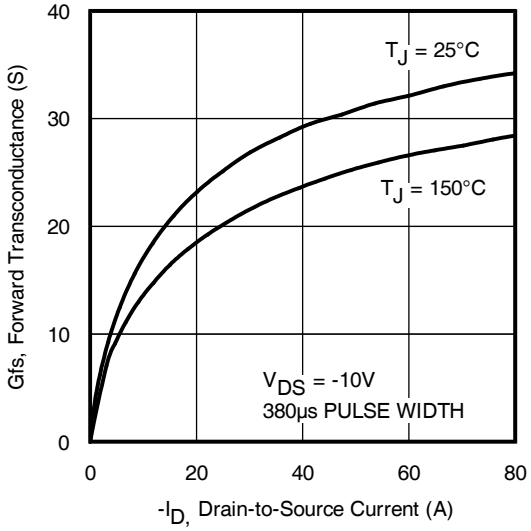

Fig. 4 Typical Forward Trans conductance vs. Drain Current

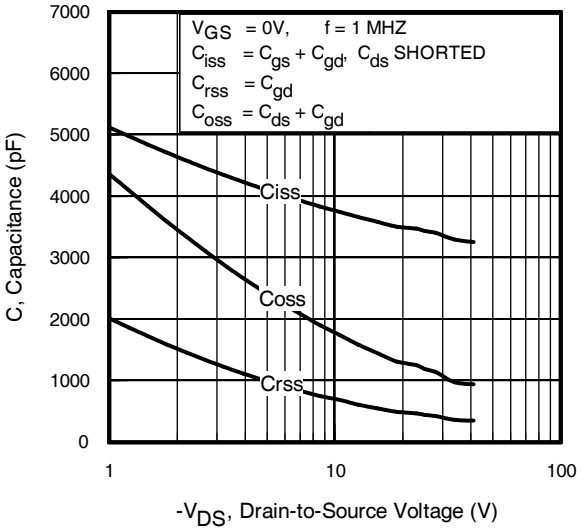

Fig 5. Typical Capacitance vs. Drain-to-Source Voltage

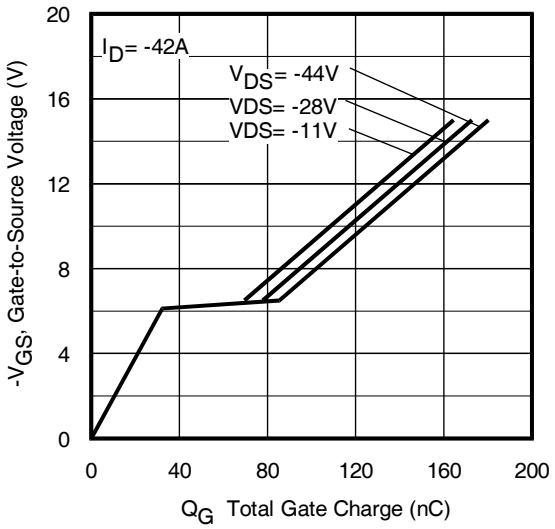

Fig 6. Typical Gate Charge vs. Gate-to-Source Voltage

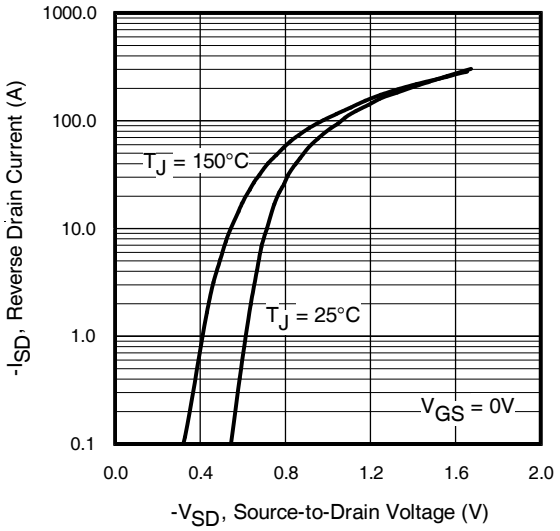

Fig. 7 Typical Source-to-Drain Diode Forward Voltage

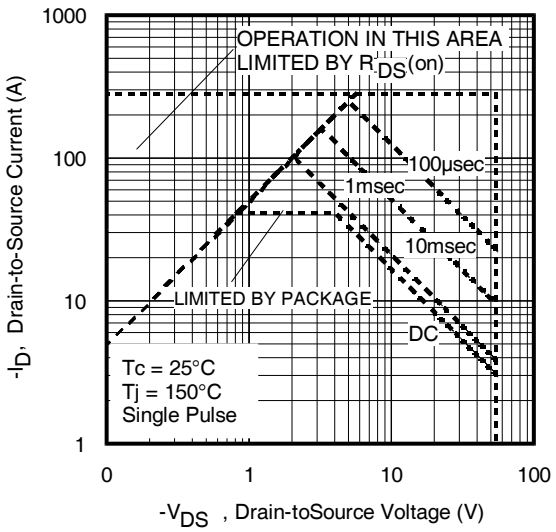

Fig 8. Maximum Safe Operating Area

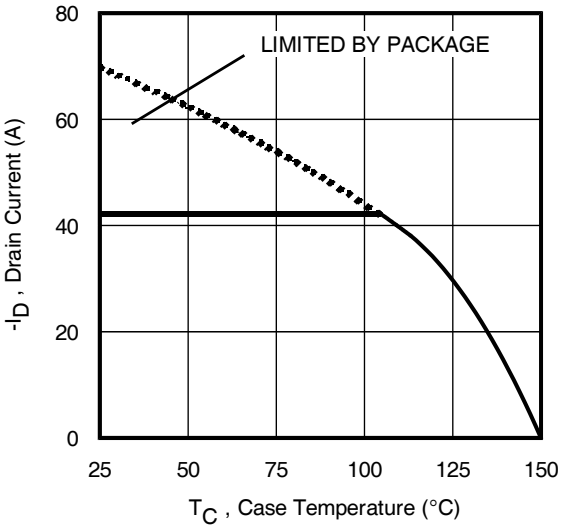

Fig 9. Maximum Drain Current vs. Case Temperature

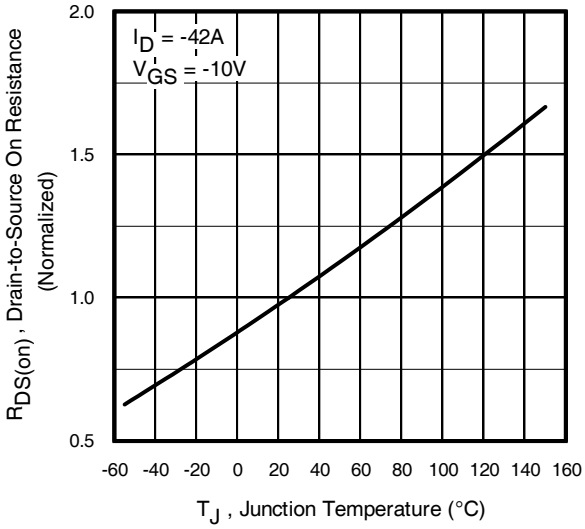

Fig 10. Normalized On-Resistance vs. Temperature

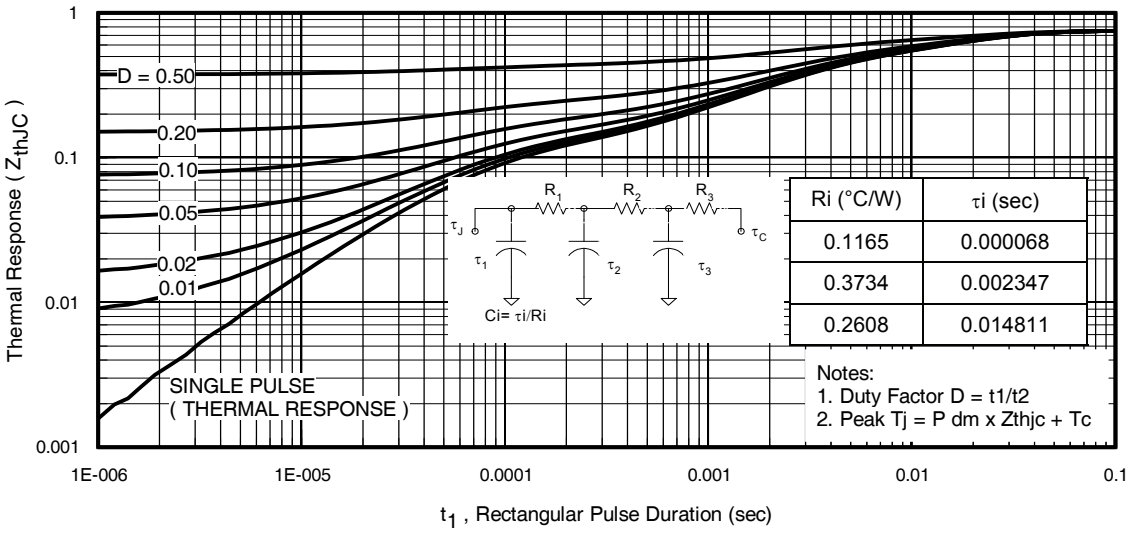

Ri (°C/W)	τi (sec)
0.1165	0.000068
0.3734	0.002347
0.2608	0.014811

Fig 11. Maximum Effective Transient Thermal Impedance, Junction-to-Case

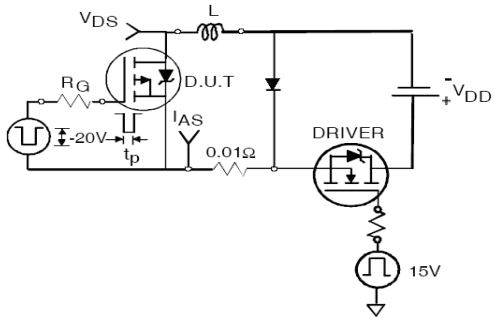

Fig 12a. Unclamped Inductive Test Circuit

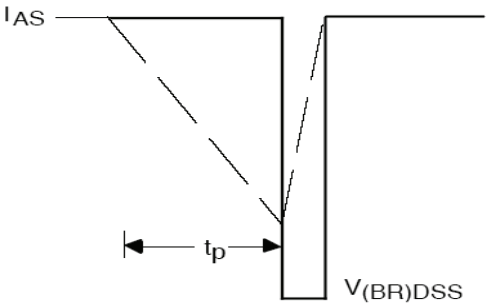

Fig 12b. Unclamped Inductive Waveforms

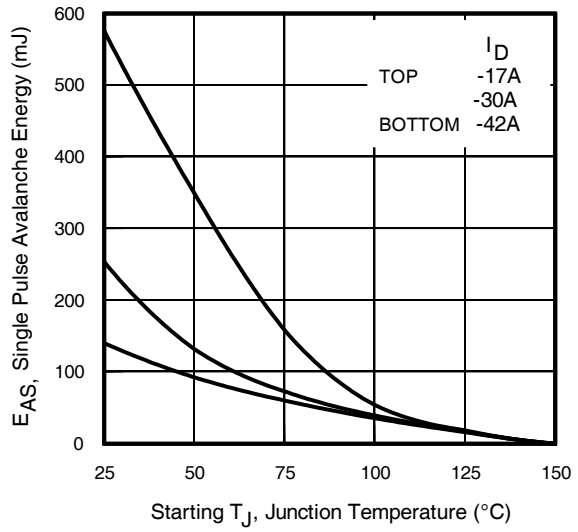

Fig 12c. Maximum Avalanche Energy vs. Drain Current

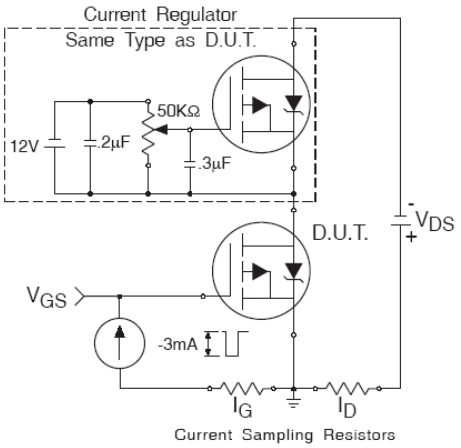

Fig 13a. Gate Charge Test Circuit

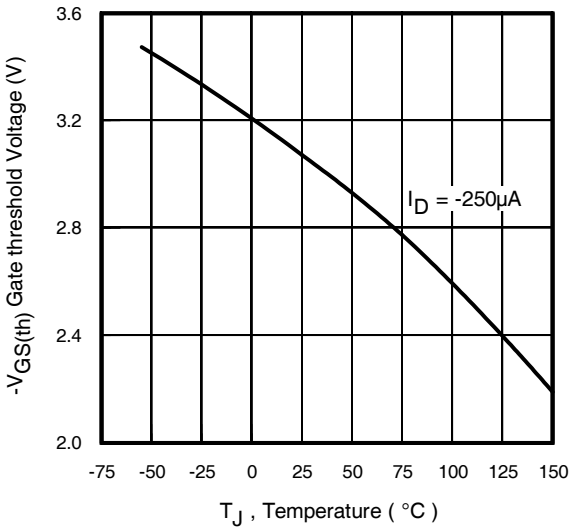

Fig 14. Threshold Voltage vs. Temperature

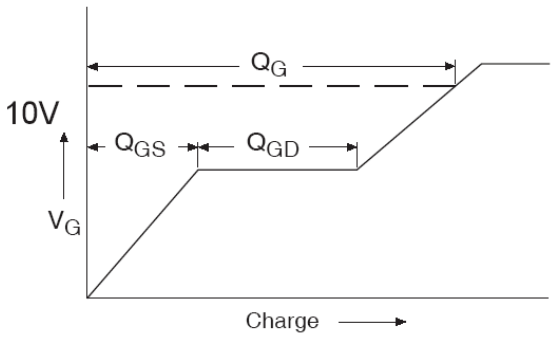

Fig 13b. Gate Charge Waveform

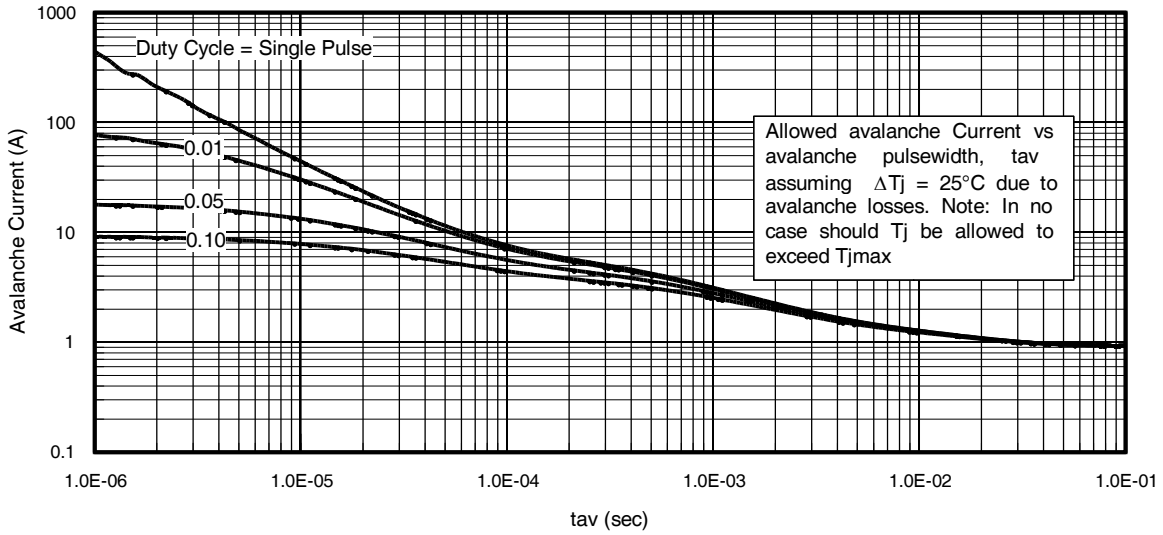

Fig 15. Avalanche Current vs. Pulse width

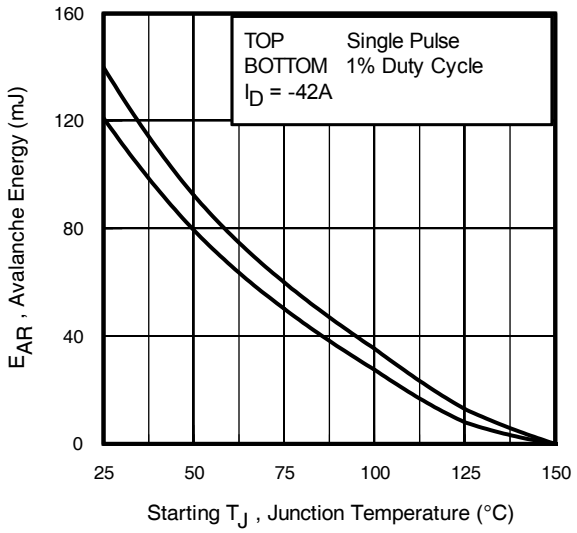

Fig 16. Maximum Avalanche Energy vs. Temperature

Notes on Repetitive Avalanche Curves , Figures 15, 16:
(For further info, see AN-1005 at www.infineon.com)

1. Avalanche failures assumption:
   Purely a thermal phenomenon and failure occurs at a temperature far in excess of T_{jmax}. This is validated for every part type.
2. Safe operation in Avalanche is allowed as long as T_{jmax} is not exceeded.
3. Equation below based on circuit and waveforms shown in Figures 12a, 12b.
4. $P_{D\ (ave)}$ = Average power dissipation per single avalanche pulse.
5. BV = Rated breakdown voltage (1.3 factor accounts for voltage increase during avalanche).
6. I_{av} = Allowable avalanche current.
7. ΔT = Allowable rise in junction temperature, not to exceed T_{jmax} (assumed as 25°C in Figure 14, 15).
   t_{av} = Average time in avalanche.
   D = Duty cycle in avalanche = $t_{av} \cdot f$
   $Z_{thJC}(D, t_{av})$ = Transient thermal resistance, see Figures 13)

$$P_{D\ (ave)} = 1/2\ (1.3 \cdot BV \cdot I_{av}) = \Delta T / Z_{thJC}$$

$$I_{av} = 2\Delta T / [1.3 \cdot BV \cdot Z_{th}]$$

$$E_{AS\ (AR)} = P_{D\ (ave)} \cdot t_{av}$$

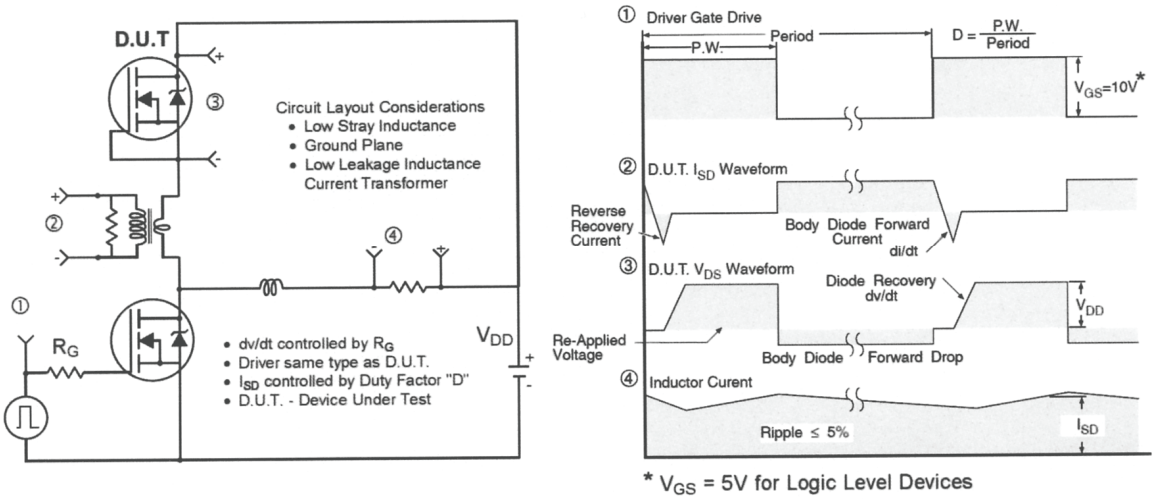

Fig 17. Peak Diode Recovery dv/dt Test Circuit for P-Channel HEXFET® Power MOSFETs

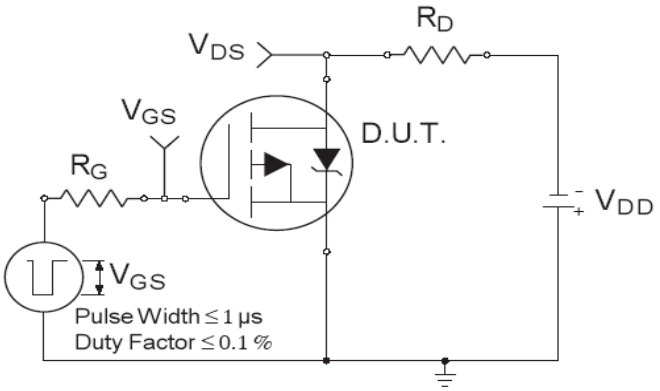

Fig 18a. Switching Time Test Circuit

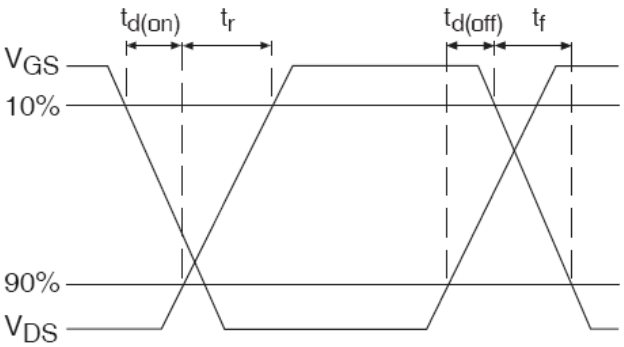

Fig 18b. Switching Time Waveforms

D²Pak (TO-263AB) Package Outline (Dimensions are shown in millimeters (inches))

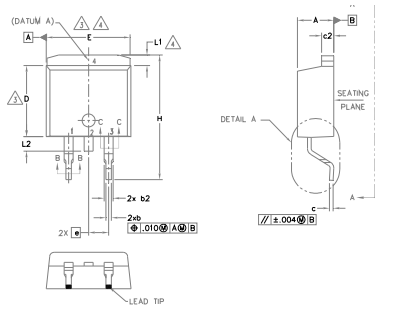

NOTES:

1. DIMENSIONING AND TOLERANCING PER ASME Y14.5M-1994
2. DIMENSIONS ARE SHOWN IN MILLIMETERS [INCHES].
3. DIMENSION D & E DO NOT INCLUDE MOLD FLASH. MOLD FLASH SHALL NOT EXCEED 0.127 [.005"] PER SIDE. THESE DIMENSIONS ARE MEASURED AT THE OUTMOST EXTREMES OF THE PLASTIC BODY AT DATUM H.
4. THERMAL PAD CONTOUR OPTIONAL WITHIN DIMENSION E, L1, D1 & E1.
5. DIMENSION b1, b3 AND c1 APPLY TO BASE METAL ONLY.
6. DATUM A & B TO BE DETERMINED AT DATUM PLANE H.
7. CONTROLLING DIMENSION: INCH.
8. OUTLINE CONFORMS TO JEDEC OUTLINE TO-263AB.

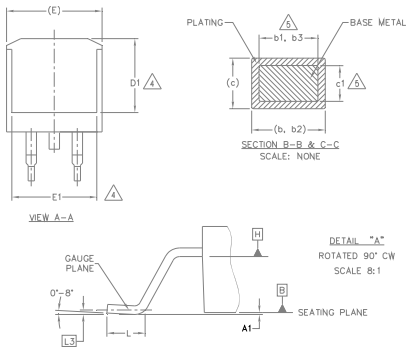

SYMBOL	DIMENSIONS				NOTES
	MILLIMETERS		INCHES		
	MIN.	MAX.	MIN.	MAX.	
A	4.06	4.83	.160	.190	
A1	0.00	0.254	.000	.010	
b	0.51	0.99	.020	.039	
b1	0.51	0.89	.020	.035	5
b2	1.14	1.78	.045	.070	
b3	1.14	1.73	.045	.068	5
c	0.38	0.74	.015	.029	
c1	0.38	0.58	.015	.023	5
c2	1.14	1.65	.045	.065	
D	8.38	9.65	.330	.380	3
D1	6.86	—	.270	—	4
E	9.65	10.67	.380	.420	3,4
E1	6.22	—	.245	—	4
e	2.54 BSC		.100 BSC		
H	14.61	15.88	.575	.625	
L	1.78	2.79	.070	.110	
L1	—	1.68	—	.066	4
L2	—	1.78	—	.070	
L3	0.25 BSC		.010 BSC		

LEAD ASSIGNMENTS

DIODES
1.– ANODE (TWO DIE) / OPEN (ONE DIE)
2, 4.– CATHODE
3.– ANODE

HEXFET
1.– GATE
2, 4.– DRAIN
3.– SOURCE

IGBTs, CoPACK
1.– GATE
2, 4.– COLLECTOR
3.– EMITTER

D²Pak (TO-263AB) Part Marking Information

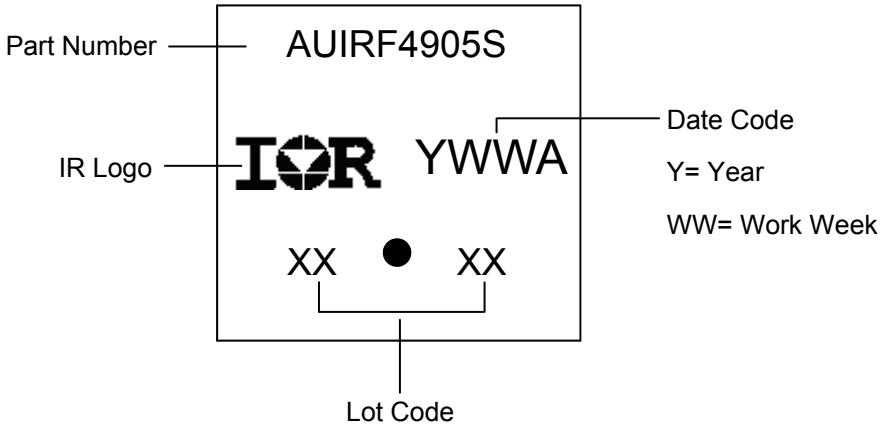

Note: For the most current drawing please refer to IR website at http://www.irf.com/package/

TO-262 Package Outline (Dimensions are shown in millimeters (inches)

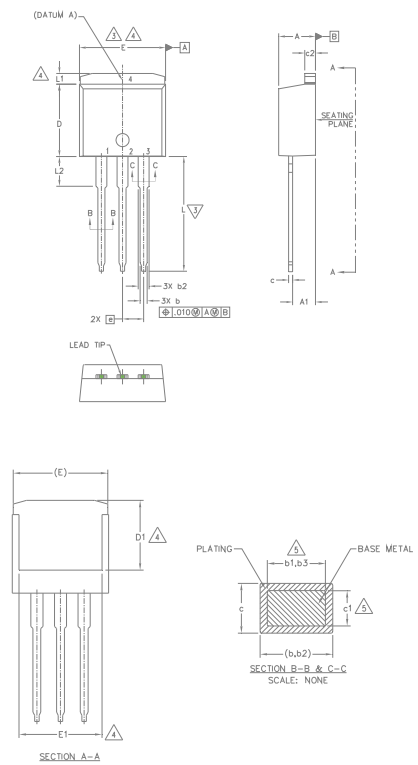

NOTES:

1. DIMENSIONING AND TOLERANCING PER ASME Y14.5M-1994
2. DIMENSIONS ARE SHOWN IN MILLIMETERS [INCHES].
3. DIMENSION D & E DO NOT INCLUDE MOLD FLASH. MOLD FLASH SHALL NOT EXCEED 0.127 [.005"] PER SIDE. THESE DIMENSIONS ARE MEASURED AT THE OUTMOST EXTREMES OF THE PLASTIC BODY.
4. THERMAL PAD CONTOUR OPTIONAL WITHIN DIMENSION E, L1, D1 & E1.
5. DIMENSION b1 AND c1 APPLY TO BASE METAL ONLY.
6. CONTROLLING DIMENSION: INCH.
7.- OUTLINE CONFORM TO JEDEC TO-262 EXCEPT A1(max.), b(min.) AND D1(min.) WHERE DIMENSIONS DERIVED THE ACTUAL PACKAGE OUTLINE.

LEAD ASSIGNMENTS

IGBTs, CoPACK

1.- GATE
2.- COLLECTOR
3.- EMITTER
4.- COLLECTOR

HEXFET

1.- GATE
2.- DRAIN
3.- SOURCE
4.- DRAIN

DIODES

1.- ANODE (TWO DIE) / OPEN (ONE DIE)
2, 4.- CATHODE
3.- ANODE

SYMBOL	DIMENSIONS				NOTES
	MILLIMETERS		INCHES		
	MIN.	MAX.	MIN.	MAX.	
A	4.06	4.83	.160	.190	
A1	2.03	3.02	.080	.119	
b	0.51	0.99	.020	.039	
b1	0.51	0.89	.020	.035	5
b2	1.14	1.78	.045	.070	
b3	1.14	1.73	.045	.068	5
c	0.38	0.74	.015	.029	
c1	0.38	0.58	.015	.023	5
c2	1.14	1.65	.045	.065	
D	8.38	9.65	.330	.380	3
D1	6.86	–	.270	–	4
E	9.65	10.67	.380	.420	3,4
E1	6.22	–	.245		4
e	2.54 BSC		.100 BSC		
L	13.46	14.10	.530	.555	
L1	–	1.65	–	.065	4
L2	3.56	3.71	.140	.146	

TO-262 Part Marking Information

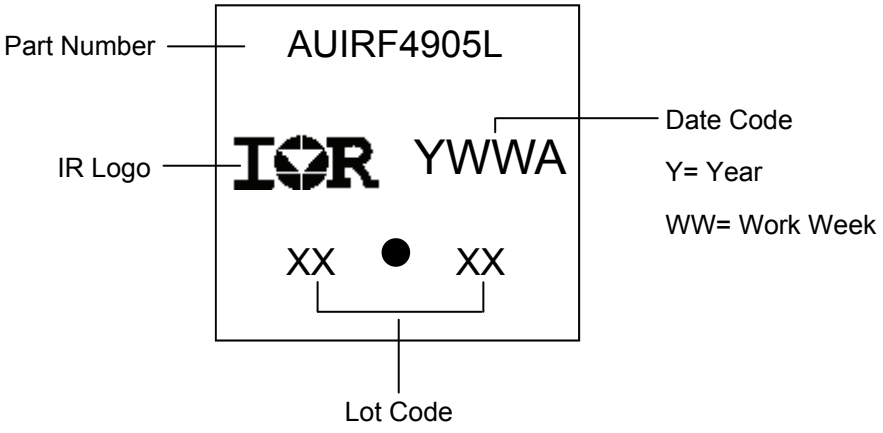

Note: For the most current drawing please refer to IR website at http://www.irf.com/package/

D²Pak (TO-263AB) Tape & Reel Information (Dimensions are shown in millimeters (inches))

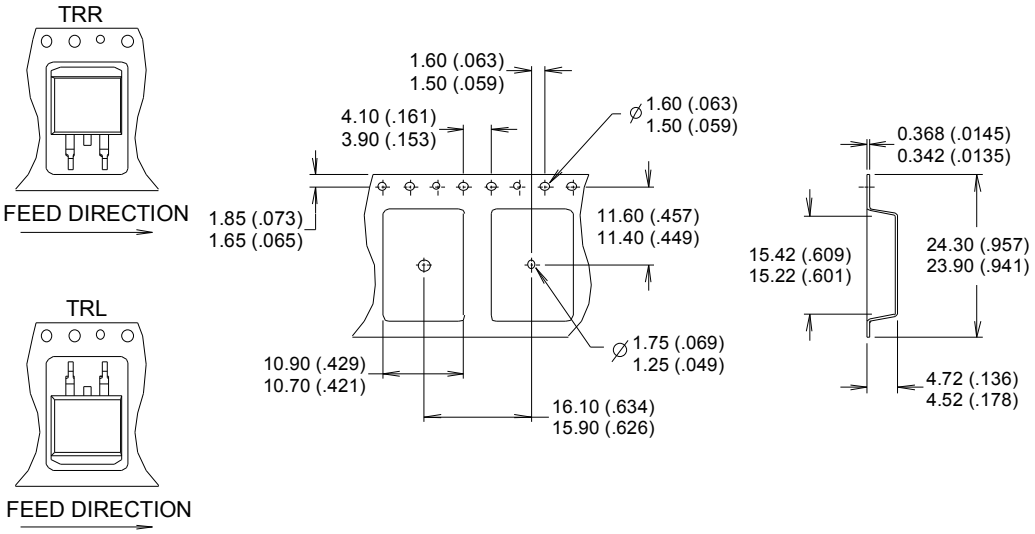

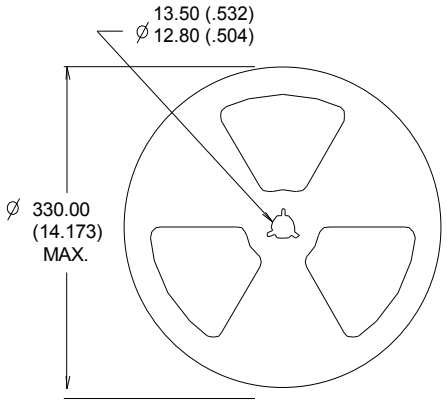

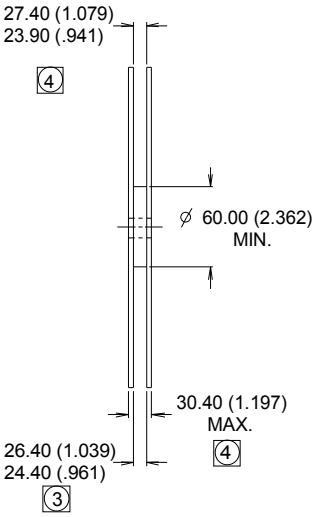

NOTES :
1. COMFORMS TO EIA-418.
2. CONTROLLING DIMENSION: MILLIMETER.
3. DIMENSION MEASURED @ HUB.
4. INCLUDES FLANGE DISTORTION @ OUTER EDGE.

Note: For the most current drawing please refer to IR website at http://www.irf.com/package/

Qualification Information

Qualification Level		Automotive (per AEC-Q101)	
		Comments: This part number(s) passed Automotive qualification. Infineon's Industrial and Consumer qualification level is granted by extension of the higher Automotive level.	
Moisture Sensitivity Level		TO-262 Pak	MSL1
		D^2-Pak	
ESD	Machine Model	Class M4 (+/- 425V)† AEC-Q101-002	
	Human Body Model	Class H2 (+/- 4000V)† AEC-Q101-001	
	Charged Device Model	Class C5 (+/- 1125V)† AEC-Q101-005	
RoHS Compliant		Yes	

† Highest passing voltage.

Revision History

Date	Comments
11/13/2015	• Updated datasheet with corporate template • Corrected ordering table on page 1.

Published by
Infineon Technologies AG
81726 München, Germany
© Infineon Technologies AG 2015
All Rights Reserved.

IMPORTANT NOTICE

The information given in this document shall in no event be regarded as a guarantee of conditions or characteristics ("Beschaffenheitsgarantie"). With respect to any examples, hints or any typical values stated herein and/or any information regarding the application of the product, Infineon Technologies hereby disclaims any and all warranties and liabilities of any kind, including without limitation warranties of non-infringement of intellectual property rights of any third party.

In addition, any information given in this document is subject to customer's compliance with its obligations stated in this document and any applicable legal requirements, norms and standards concerning customer's products and any use of the product of Infineon Technologies in customer's applications.

The data contained in this document is exclusively intended for technically trained staff. It is the responsibility of customer's technical departments to evaluate the suitability of the product for the intended application and the completeness of the product information given in this document with respect to such application.

For further information on the product, technology, delivery terms and conditions and prices please contact your nearest Infineon Technologies office (www.infineon.com).

WARNINGS

Due to technical requirements products may contain dangerous substances. For information on the types in question please contact your nearest Infineon Technologies office.

Except as otherwise explicitly approved by Infineon Technologies in a written document signed by authorized representatives of Infineon Technologies, Infineon Technologies' products may not be used in any applications where a failure of the product or any consequences of the use thereof can reasonably be expected to result in personal injury.