STTH812

Ultrafast recovery - 1200 V diode

Main product characteristics

$I_{F(AV)}$	8 A
V_{RRM}	1200 V
T_j	175° C
V_F (typ)	1.25 V
t_{rr} (typ)	50 ns

Features and benefits

- Ultrafast, soft recovery
- Very low conduction and switching losses
- High frequency and/or high pulsed current operation
- High reverse voltage capability
- High junction temperature
- Insulated packages:
  - TO-220Ins
    Electrical insulation = 2500 V_{RMS}
    Capacitance = 7 pF
  - TO-220FPAC
    Electrical insulation = 2000 V_{RMS}
    Capacitance = 12 pF

Description

The high quality design of this diode has produced a device with low leakage current, regularly reproducible characteristics and intrinsic ruggedness. These characteristics make it ideal for heavy duty applications that demand long term reliability.

Such demanding applications include industrial power supplies, motor control, and similar mission-critical systems that require rectification and freewheeling. These diodes also fit into auxiliary functions such as snubber, bootstrap, and demagnetization applications.

The improved performance in low leakage current, and therefore thermal runaway guard band, is an immediate competitive advantage for this device.

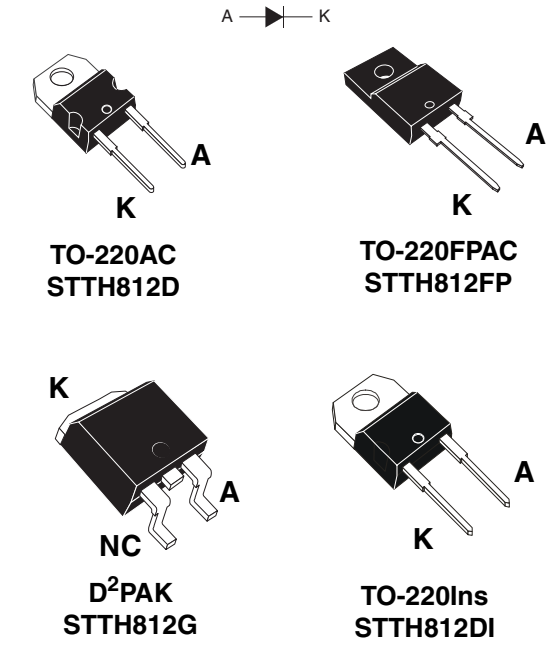

Order codes

Part Number	Marking
STTH812D	STTH812D
STTH812G	STTH812G
STTH812G-TR	STTH812G
STTH812FP	STTH812FP
STTH812DI	STTH812DI

1 Characteristics

Table 1. Absolute ratings (limiting values at 25° C, unless otherwise specified)

Symbol	Parameter			Value	Unit
V_{RRM}	Repetitive peak reverse voltage			1200	V
$I_{F(RMS)}$	RMS forward current	TO-220AC / D^2PAK / TO-220FPAC		30	A
		TO-220AC Ins		20	
$I_{F(AV)}$	Average forward current, $\delta = 0.5$	TO-220AC / D^2PAK	T_c = 140° C	8	A
		TO-220FPAC	T_c = 75° C		
		TO-220AC Ins	T_c = 115° C		
I_{FRM}	Repetitive peak forward current	t_p = 5 µs, F = 5 kHz square		100	A
I_{FSM}	Surge non repetitive forward current	t_p = 10 ms Sinusoidal		80	A
T_{stg}	Storage temperature range			-65 to + 175	°C
T_j	Maximum operating junction temperature			175	°C

Table 2. Thermal parameters

Symbol	Parameter		Value	Unit
$R_{th(j-c)}$	Junction to case	TO-220AC / D^2PAK	1.9	°C/W
		TO-220FPAC	5.4	
		TO-220AC Ins	3.1	

Table 3. Static electrical characteristics

Symbol	Parameter	Test conditions		Min.	Typ	Max.	Unit
I_R(1)	Reverse leakage current	T_j = 25° C	$V_R = V_{RRM}$			8	µA
		T_j = 125° C			5	50	
V_F(2)	Forward voltage drop	T_j = 25° C	I_F = 8 A			2.2	V
		T_j = 125° C			1.30	2.0	
		T_j = 150° C			1.25	1.9	

1. Pulse test: t_p = 5 ms, $\delta < 2$ %
2. Pulse test: t_p = 380 µs, $\delta < 2$ %

To evaluate the conduction losses use the following equation:
$P = 1.5 \times I_{F(AV)} + 0.05\ I_F^2{}_{(RMS)}$

Table 4. Dynamic characteristics

Symbol	Parameter	Test conditions	Min.	Typ	Max.	Unit
t_{rr}	Reverse recovery time	I_F = 1 A, dI_F/dt = -50 A/µs, V_R = 30 V, T_j = 25° C			100	ns
		I_F = 1 A, dI_F/dt = -100 A/µs, V_R = 30 V, T_j = 25° C		50	70	
I_{RM}	Reverse recovery current	I_F = 8 A, dI_F/dt = -200 A/µs, V_R = 600 V, T_j = 125° C		14	21	A
S	Softness factor	I_F = 8 A, dI_F/dt = -200 A/µs, V_R = 600 V, T_j = 125° C		2		
t_{fr}	Forward recovery time	I_F = 8 A dI_F/dt = 50 A/µs V_{FR} = 1.5 x V_{Fmax}, T_j = 25° C			400	ns
V_{FP}	Forward recovery voltage	I_F = 8 A, dI_F/dt = 50 A/µs, T_j = 25° C		7		V

Figure 1. Conduction losses versus average current

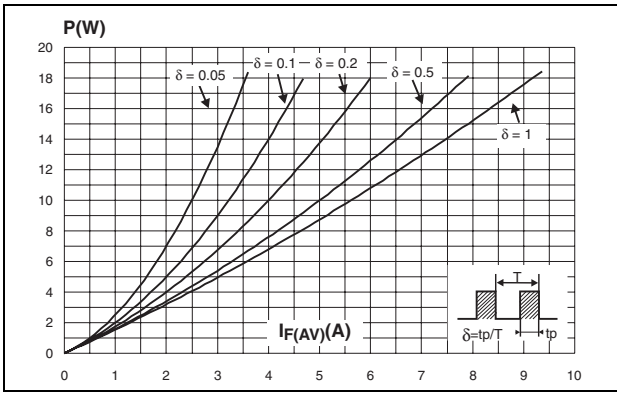

Figure 2. Forward voltage drop versus forward current

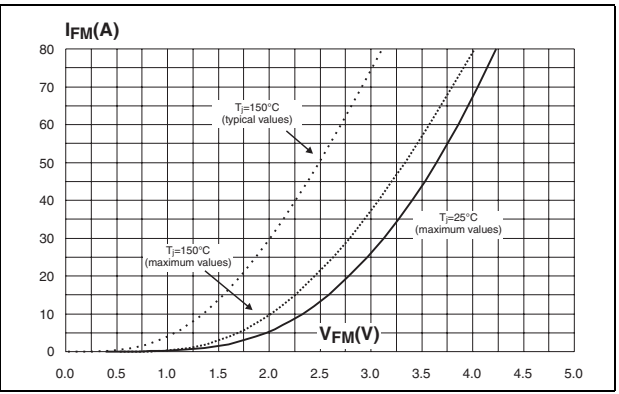

Figure 3. Relative variation of thermal impedance junction to case versus pulse duration

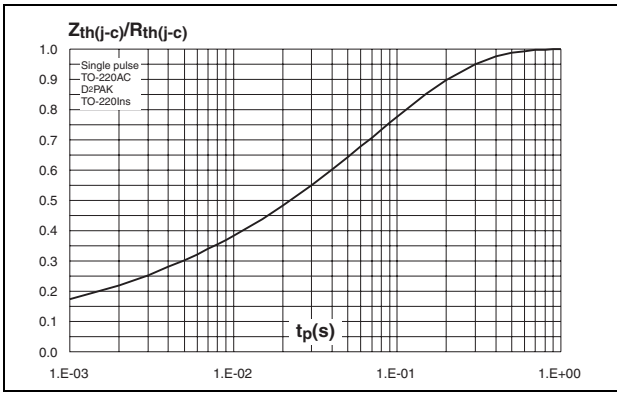

Figure 4. Relative variation of thermal impedance junction to case versus pulse duration

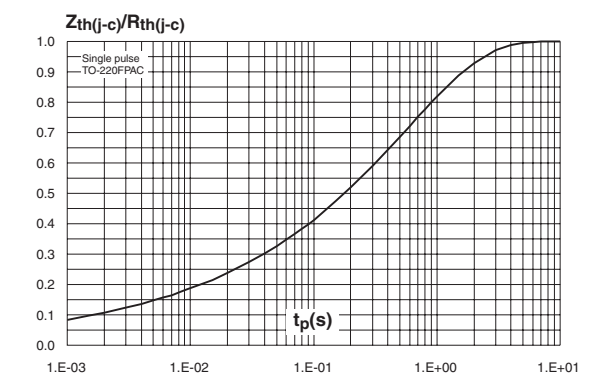

Figure 5. Peak reverse recovery current versus dI_F/dt (typical values)

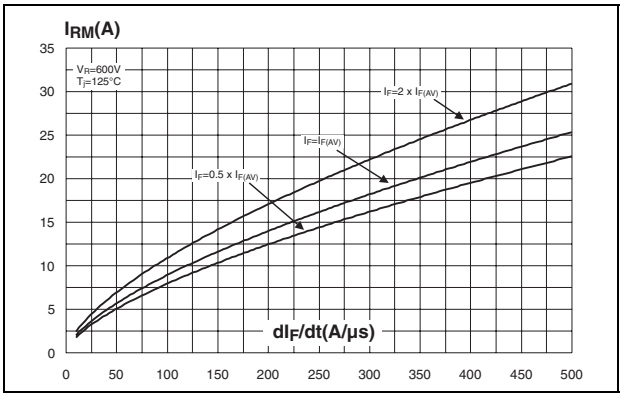

Figure 6. Reverse recovery time versus dI_F/dt (typical values)

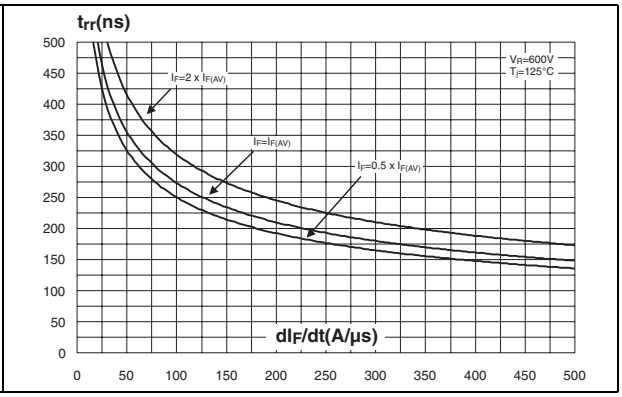

Figure 7. Reverse recovery charges versus dI_F/dt (typical values)

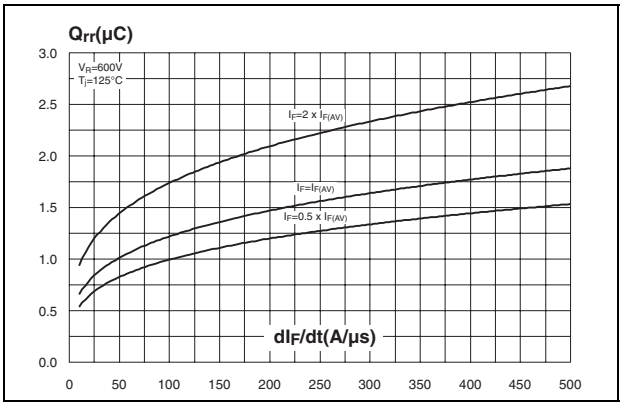

Figure 8. Softness factor versus dI_F/dt (typical values)

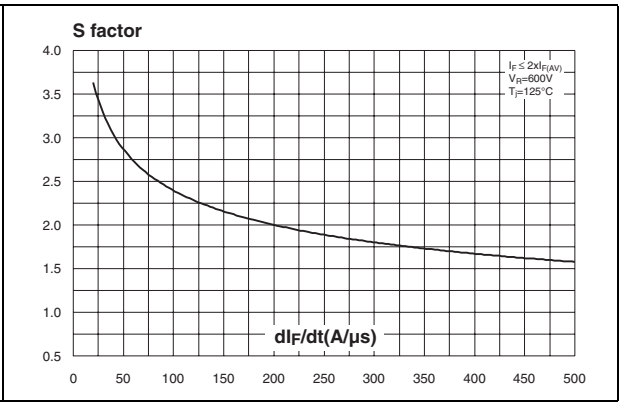

Figure 9. Relative variations of dynamic parameters versus junction temperature

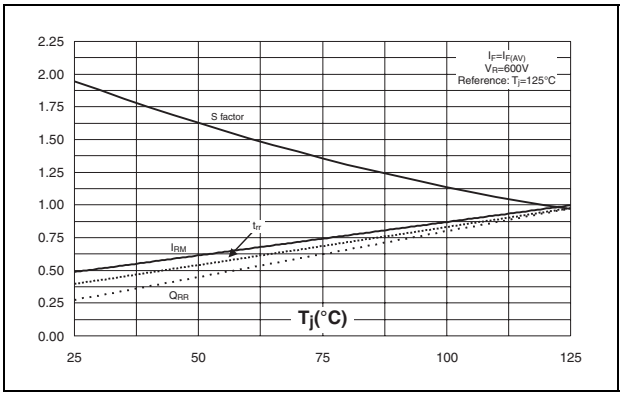

Figure 10. Transient peak forward voltage versus dI_F/dt (typical values)

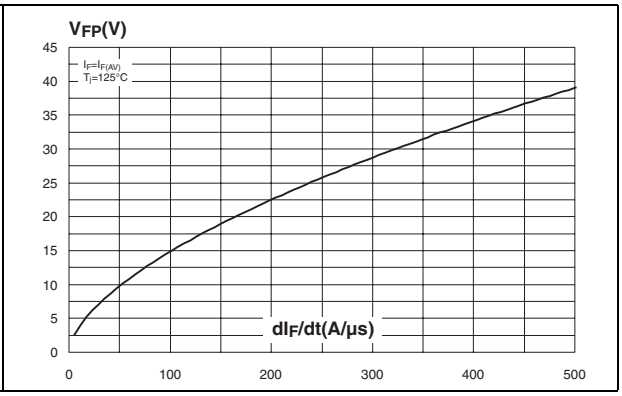

Figure 11. Forward recovery time versus dI_F/dt (typical values)

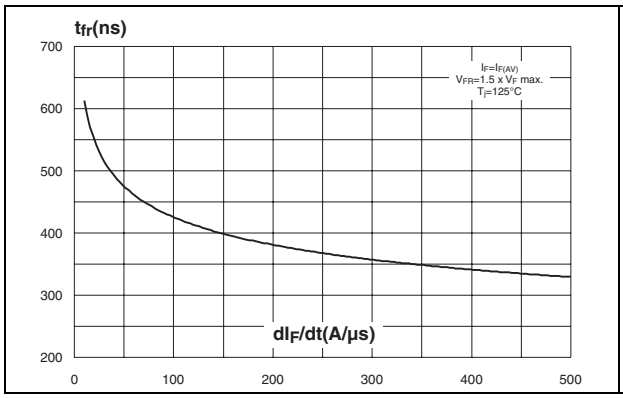

Figure 12. Junction capacitance versus reverse voltage applied (typical values)

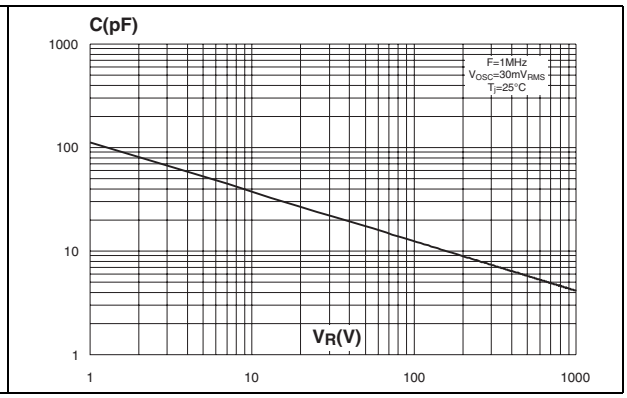

Figure 13. Thermal resistance junction to ambient versus copper surface under tab (Epoxy printed circuit board FR4, e_{cu} = 35 µm)

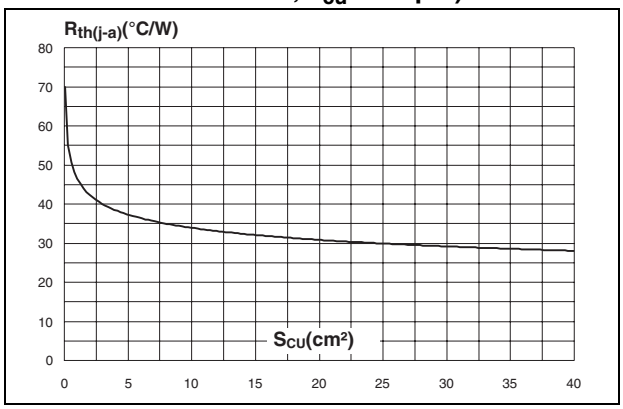

2 Package mechanical data

Epoxy meets UL94, V0

Cooling method: by conduction (C)

Recommended torque value: 0.55 Nm (TO-220AC)

Maximum torque value: 0.7 Nm (TO-220AC)

Table 5. T0-220AC dimensions

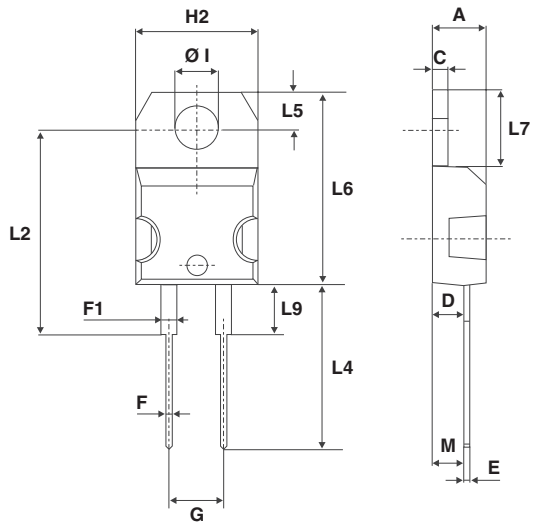

REF.	DIMENSIONS			
	Millimeters		Inches	
	Min.	Max.	Min.	Max.
A	4.40	4.60	0.173	0.181
C	1.23	1.32	0.048	0.051
D	2.40	2.72	0.094	0.107
E	0.49	0.70	0.019	0.027
F	0.61	0.88	0.024	0.034
F1	1.14	1.70	0.044	0.066
G	4.95	5.15	0.194	0.202
H2	10.00	10.40	0.393	0.409
L2	16.40 typ.		0.645 typ.	
L4	13.00	14.00	0.511	0.551
L5	2.65	2.95	0.104	0.116
L6	15.25	15.75	0.600	0.620
L7	6.20	6.60	0.244	0.259
L9	3.50	3.93	0.137	0.154
M	2.6 typ.		0.102 typ.	
Diam. I	3.75	3.85	0.147	0.151

Table 6. T0-220Ins dimensions

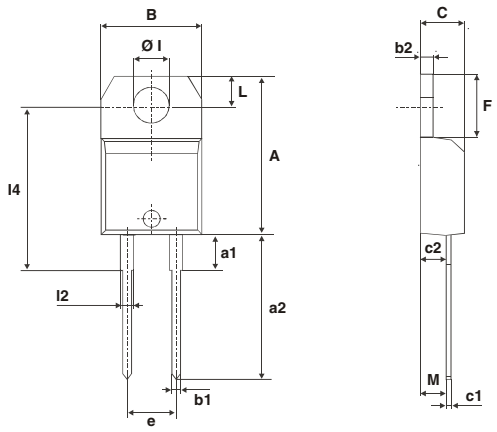

REF	DIMENSIONS					
	Millimeters			Inches		
	Min.		Max.	Min.		Max.
A	15.20		15.90	0.598		0.625
a1		3.75			0.147	
a2	13.00		14.00	0.511		0.551
B	10.00		10.40	0.393		0.409
b1	0.61		0.88	0.024		0.034
b2	1.23		1.32	0.048		0.051
C	4.40		4.60	0.173		0.181
c1	0.49		0.70	0.019		0.027
c2	2.40		2.72	0.094		0.107
e	4.80		5.40	0.189		0.212
F	6.20		6.60	0.244		0.259
ØI	3.75		3.85	0.147		0.151
l4	15.80	16.40	16.80	0.622	0.646	0.661
L	2.65		2.95	0.104		0.116
l2	1.14		1.70	0.044		0.066
M		2.60			0.102	

Table 7. T0-220FPAC dimensions

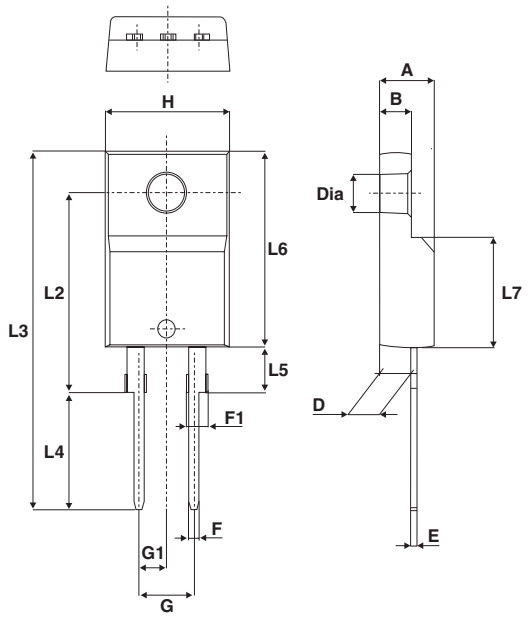

REF	DIMENSIONS			
	Millimeters		Inches	
	Min.	Max.	Min.	Max.
A	4.4	4.6	0.173	0.181
B	2.5	2.7	0.098	0.106
D	2.5	2.75	0.098	0.108
E	0.45	0.70	0.018	0.027
F	0.75	1	0.030	0.039
F1	1.15	1.70	0.045	0.067
G	4.95	5.20	0.195	0.205
G1	2.4	2.7	0.094	0.106
H	10	10.4	0.393	0.409
L2	16 Typ.		0.63 Typ.	
L3	28.6	30.6	1.126	1.205
L4	9.8	10.6	0.386	0.417
L5	2.9	3.6	0.114	0.142
L6	15.9	16.4	0.626	0.646
L7	9.00	9.30	0.354	0.366
Dia.	3.00	3.20	0.118	0.126

Table 8. D²PAK dimensions

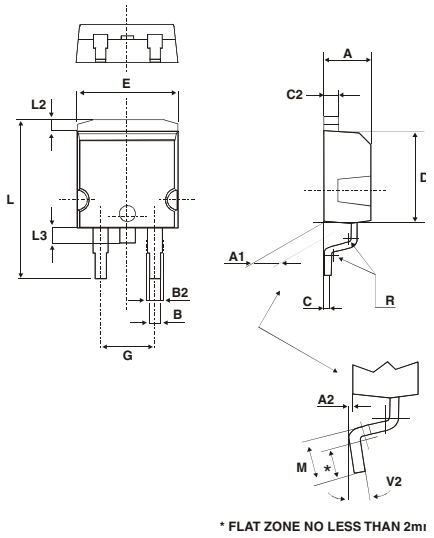

REF.	DIMENSIONS			
	Millimeters		Inches	
	Min.	Max	Min.	Max.
A	4.40	4.60	0.173	0.181
A1	2.49	2.69	0.098	0.106
A2	0.03	0.23	0.001	0.009
B	0.70	0.93	0.027	0.037
B2	1.14	1.70	0.045	0.067
C	0.45	0.60	0.017	0.024
C2	1.23	1.36	0.048	0.054
D	8.95	9.35	0.352	0.368
E	10.00	10.40	0.393	0.409
G	4.88	5.28	0.192	0.208
L	15.00	15.85	0.590	0.624
L2	1.27	1.40	0.050	0.055
L3	1.40	1.75	0.055	0.069
M	2.40	3.20	0.094	0.126
R	0.40 typ.		0.016 typ.	
V2	0°	8°	0°	8°

Figure 14. D²PAK footprint (dimensions in mm)

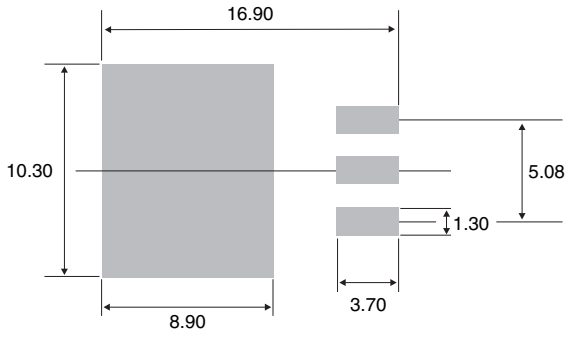

In order to meet environmental requirements, ST offers these devices in ECOPACK® packages. These packages have a Lead-free second level interconnect . The category of second level interconnect is marked on the package and on the inner box label, in compliance with JEDEC Standard JESD97. The maximum ratings related to soldering conditions are also marked on the inner box label. ECOPACK is an ST trademark. ECOPACK specifications are available at: www.st.com.

3 Ordering information

Part Number	Marking	Package	Weight	Base qty	Delivery mode
STTH812D	STTH812D	TO-220AC	1.86 g	50	Tube
STTH812DI	STTH812DI	TO-220Ins	1.86 g	50	Tube
STTH812FP	STTH812FP	TO-220FPAC	2.2 g	50	Tube
STTH812G	STTH812G	D^2PAK	1.48 g	50	Tube
STTH812G-TR	STTH812G	D^2PAK	1.48 g	1000	Tape & reel

4 Revision history

Date	Revision	Description of Changes
02-Mar-2006	1	First issue.

Please Read Carefully:

Information in this document is provided solely in connection with ST products. STMicroelectronics NV and its subsidiaries (“ST”) reserve the right to make changes, corrections, modifications or improvements, to this document, and the products and services described herein at any time, without notice.

All ST products are sold pursuant to ST’s terms and conditions of sale.

Purchasers are solely responsible for the choice, selection and use of the ST products and services described herein, and ST assumes no liability whatsoever relating to the choice, selection or use of the ST products and services described herein.

No license, express or implied, by estoppel or otherwise, to any intellectual property rights is granted under this document. If any part of this document refers to any third party products or services it shall not be deemed a license grant by ST for the use of such third party products or services, or any intellectual property contained therein or considered as a warranty covering the use in any manner whatsoever of such third party products or services or any intellectual property contained therein.

UNLESS OTHERWISE SET FORTH IN ST’S TERMS AND CONDITIONS OF SALE ST DISCLAIMS ANY EXPRESS OR IMPLIED WARRANTY WITH RESPECT TO THE USE AND/OR SALE OF ST PRODUCTS INCLUDING WITHOUT LIMITATION IMPLIED WARRANTIES OF MERCHANTABILITY, FITNESS FOR A PARTICULAR PURPOSE (AND THEIR EQUIVALENTS UNDER THE LAWS OF ANY JURISDICTION), OR INFRINGEMENT OF ANY PATENT, COPYRIGHT OR OTHER INTELLECTUAL PROPERTY RIGHT.

UNLESS EXPRESSLY APPROVED IN WRITING BY AN AUTHORIZE REPRESENTATIVE OF ST, ST PRODUCTS ARE NOT DESIGNED, AUTHORIZED OR WARRANTED FOR USE IN MILITARY, AIR CRAFT, SPACE, LIFE SAVING, OR LIFE SUSTAINING APPLICATIONS, NOR IN PRODUCTS OR SYSTEMS, WHERE FAILURE OR MALFUNCTION MAY RESULT IN PERSONAL INJURY, DEATH, OR SEVERE PROPERTY OR ENVIRONMENTAL DAMAGE.

Resale of ST products with provisions different from the statements and/or technical features set forth in this document shall immediately void any warranty granted by ST for the ST product or service described herein and shall not create or extend in any manner whatsoever, any liability of ST.

ST and the ST logo are trademarks or registered trademarks of ST in various countries.

Information in this document supersedes and replaces all information previously supplied.

The ST logo is a registered trademark of STMicroelectronics. All other names are the property of their respective owners.

© 2006 STMicroelectronics - All rights reserved

STMicroelectronics group of companies

Australia - Belgium - Brazil - Canada - China - Czech Republic - Finland - France - Germany - Hong Kong - India - Israel - Italy - Japan - Malaysia - Malta - Morocco - Singapore - Spain - Sweden - Switzerland - United Kingdom - United States of America

www.st.com