THIS DRAWING IS UNPUBLISHED. RELEASED FOR PUBLICATION -.- .
© COPYRIGHT - By - ALL RIGHTS RESERVED.

| LOC | DIST |
|---|---|
| GP | 00 |

REVISIONS

| P | LTR | DESCRIPTION | DATE | DWN | APVD |
|---|---|---|---|---|---|
| | AT | REVISED PER ECO-12-021696 | 01MAR2013 | CJV | CWR |

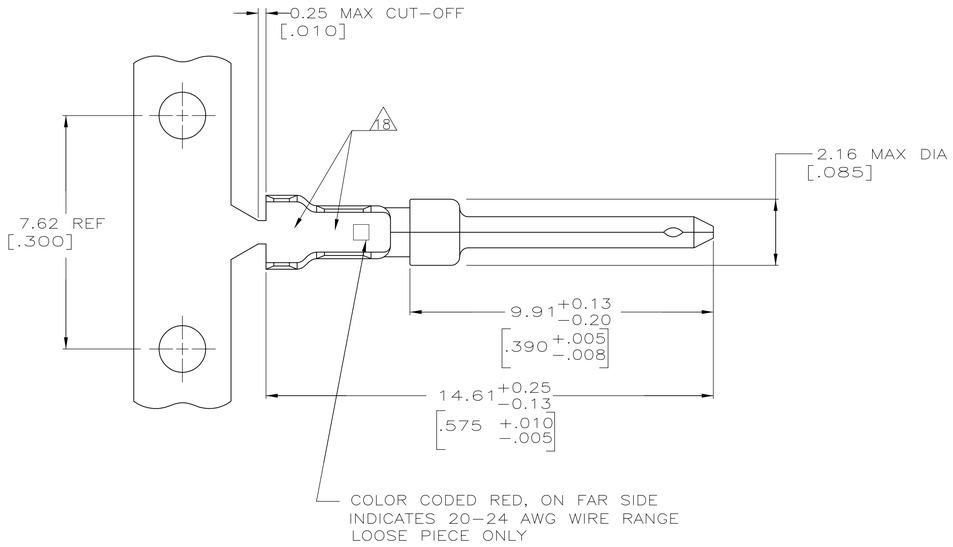


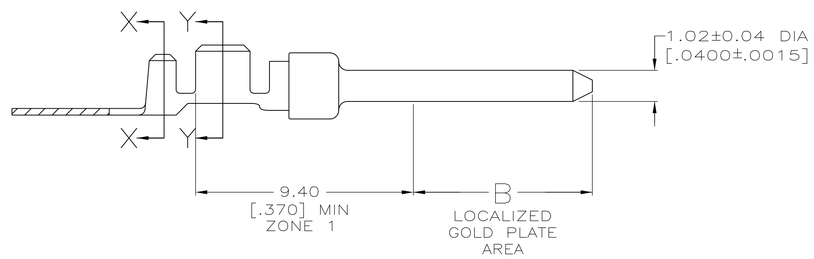


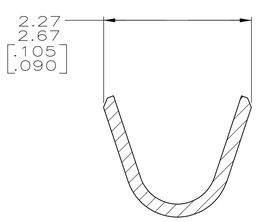


SECTION X—X
INSULATION BARREL
SCALE 20:1

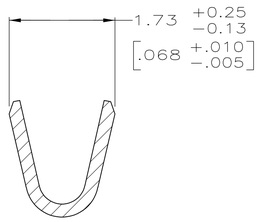


SECTION Y—Y
WIRE BARREL
SCALE 20:1

1. FOR MINI-APPLICATOR AND STRIPPER CRIMPER.
2. FOR HAND TOOL USE ONLY.
3. FOR STANDARD APPLICATOR PART #566171 ONLY.
4. WIRE RANGE OF 20-24 AWG. INSULATION RANGE OF 1.27/1.52 [.050-.060].
5. GOLD PLATING MAY NOT APPEAR ON CARRIER STRIP. NICKEL UNDERPLATE COVERS ENTIRE CONTACT.
6. GOLD PLATING PER MIL-G-45204.
   NICKEL PLATING PER QQ-N-290.
   TIN PLATING PER MIL-T-10727.
   COPPER PLATING PER MIL-C-14550.
7. PLATED, 1.27|m [.000050] MIN GOLD ON LOCALIZED GOLD PLATE AREA AND ZONE 1 OVER 1.27|m [.000050] MIN NICKEL.
8. GOLD PLATED IN LOCALIZED GOLD PLATE AREA AS FOLLOWS:
   0.76µm [.000030] MIN GOLD IN MATED AREA, GOLD FLASH ON REMAINDER OF LOCALIZED GOLD PLATE AREA AND ZONE 1 OF CONTACT, ALL OVER 1.27µm [.000050] MIN NICKEL UNDERPLATE.
   OR
   GOLD FLASH OVER PALLADIUM-NICKEL PLATE, 0.76µm [.000030] MIN TOTAL IN MATED AREA, GOLD FLASH ON REMAINDER OF LOCALIZED GOLD PLATE AREA AND ZONE 1 OF CONTACT, ALL OVER 1.27µm [.000050] MIN NICKEL UNDERPLATE.
9. PLATED WITH GOLD FLASH ON LOCALIZED GOLD PLATE AREA AND ZONE 1 OVER 0.76|m [.000030] MIN NICKEL.
10. PLATED WITH 2.54|m - 5.08|m [.000100 - .000200] TIN.
11. GOLD PLATED IN LOCALIZED GOLD PLATED AREA,
    0.76|m [.000030] GOLD IN MATED AREA,
    TIN PLATED WIRE BARRELS, OVER
    1.27|m [.000050] NICKEL.
12. PLATED WITH GOLD FLASH IN LOCALIZED GOLD PLATE AREA,
    TIN PLATED WIRE BARRELS, OVER
    0.76|m [.000030] NICKEL.
13. GOLD PLATED IN LOCALIZED GOLD PLATE AREA,
    0.38|m [.000015] GOLD IN MATED AREA,
    GOLD FLASH ON REMAINDER, OVER 1.27|m [.000050] NICKEL.
14. AMP ITALY PART NUMBER ONLY.
15. GOLD PLATED IN LOCALIZED GOLD PLATE AREA,
    1.27|m [.000050] GOLD IN MATED AREA,
    GOLD FLASH ON REMAINDER, OVER
    1.27|m [.000050] NICKEL.
16. GOLD PLATED IN LOCALIZED GOLD PLATE AREA,
    0.03|m [.000001] GOLD IN MATED AREA,
    0.76|m [.000030] MIN TIN PLATED WIRE BARRELS, ALL OVER
    0.76|m [.000030] MIN NICKEL.
17. GOLD FLASH IN LOCALIZED GOLD PLATE AREA,
    2.54|m[.000100] MIN TIN OR TIN-LEAD PLATED WIRE BARRELS, ALL OVER
    0.76|m[.000030] MIN NICKEL.
18. COMPANY LOGO ON BOTTOM OF EITHER WIRE OR INSULATION BARRELS.

| | PACKAGING TYPE | B | FINISH | USE | TYPE | PART NUMBER |
|---|---|---|---|---|---|---|
| SUPERSEDED BY 2-66506-5 | STANDARD | 5.84 [.230] | 17 | 1 | STRIP | 6-66506-4 |
| OBSOLETE | STANDARD | 3.94 [.155] | 11 | 3 | STRIP | 6-66506-3 |
| OBSOLETE | STANDARD | 3.94 [.155] | 16 | 1 | STRIP | 6-66506-2 |
| | SMALL PACK | 3.94 [.155] | 8 | 2 | LOOSE PIECE | 6-66506-1 |
| OBSOLETE | STANDARD | 3.94 [.155] | 15 | 1 | STRIP | 6-66506-0 |
| OBSOLETE | STANDARD | 3.94 [.155] | 12 | 2 | LOOSE PIECE | 5-66506-9 |
| OBSOLETE | STANDARD | 3.94 [.155] | 11 | 2 | LOOSE PIECE | 5-66506-7 |
| OBSOLETE | STANDARD | 3.94 [.155] | 12 | 1 | STRIP | 2-66506-5 |
| OBSOLETE | STANDARD | 3.94 [.155] | 11 | 1 | STRIP | 2-66506-4 |
| OBSOLETE | STANDARD | - | 10 | 1 | STRIP | 1-66506-4 |
| OBSOLETE | STANDARD | - | 7 | 3 | STRIP | 1-66506-1 |
| | STANDARD | - | 9 | 2 | LOOSE PIECE | 1-66506-0 |
| | STANDARD | 3.94 [.155] | 8 | 2 | LOOSE PIECE | 66506-9 |
| | STANDARD | - | 7 | 2 | LOOSE PIECE | 66506-8 |
| | STANDARD | - | 9 | 1 | STRIP | 66506-4 |
| | STANDARD | 3.94 [.155] | 8 | 1 | STRIP | 66506-3 |
| | STANDARD | - | 7 | 1 | STRIP | 66506-2 |

THIS DRAWING IS A CONTROLLED DOCUMENT.
DIMENSIONING AND TOLERANCING PER ASME Y14.5M-2009

DIMENSIONS: mm [INCHES]

TOLERANCES UNLESS OTHERWISE SPECIFIED:
0 PLC ± -
1 PLC ± -
2 PLC ± 0.13 [.005]
3 PLC ± -
4 PLC ± -
ANGLES ± -

MATERIAL: BRASS
FINISH: 6

DWN S. WELDON 9-9-86
CHK C. RICHARD 9-9-86
APVD V. KUMAR 9-10-86
PRODUCT SPEC —
APPLICATION SPEC 114-10000
WEIGHT —

TE Connectivity

NAME: PIN CONTACT, SIZE 20 DF, 20-24 AWG, AMPLIMITE —

| SIZE | CAGE CODE | DRAWING NO | RESTRICTED TO |
|---|---|---|---|
| A1 | 00779 | C-66506 | — |

CUSTOMER DRAWING | SCALE 10:1 | SHEET 1 OF 1 | REV AT

4805 (3/11)