THIS DRAWING IS UNPUBLISHED. RELEASED FOR PUBLICATION -,- .
© COPYRIGHT - By - ALL RIGHTS RESERVED.

LOC	DIST
FT	0

REVISIONS

P	LTR	DESCRIPTION	DATE	DWN	APVD
	Y	REVISED PER ECO-15-004121	17MAR2015	NK	MZ

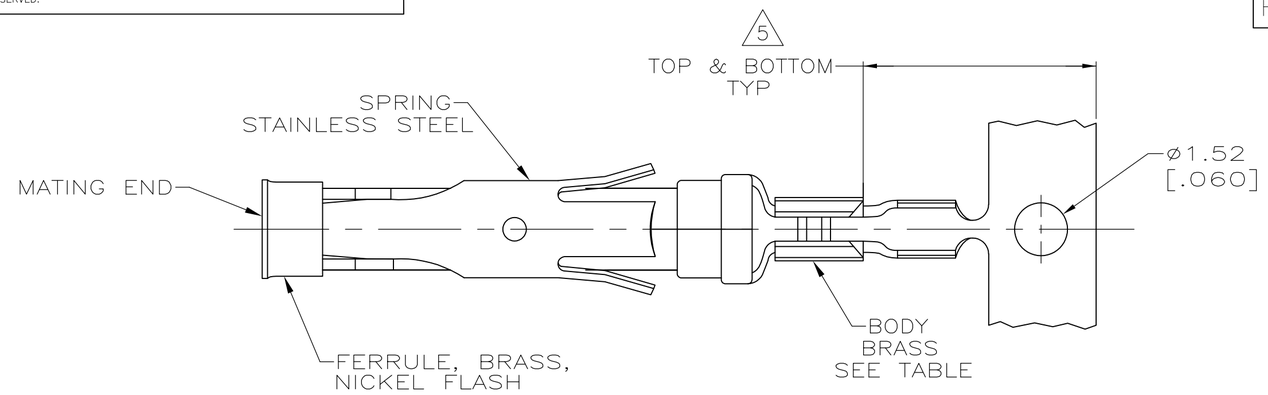

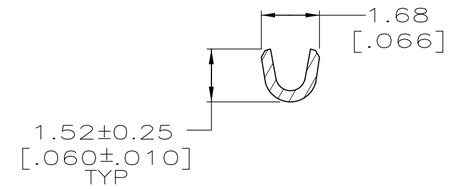

SECTION A–A

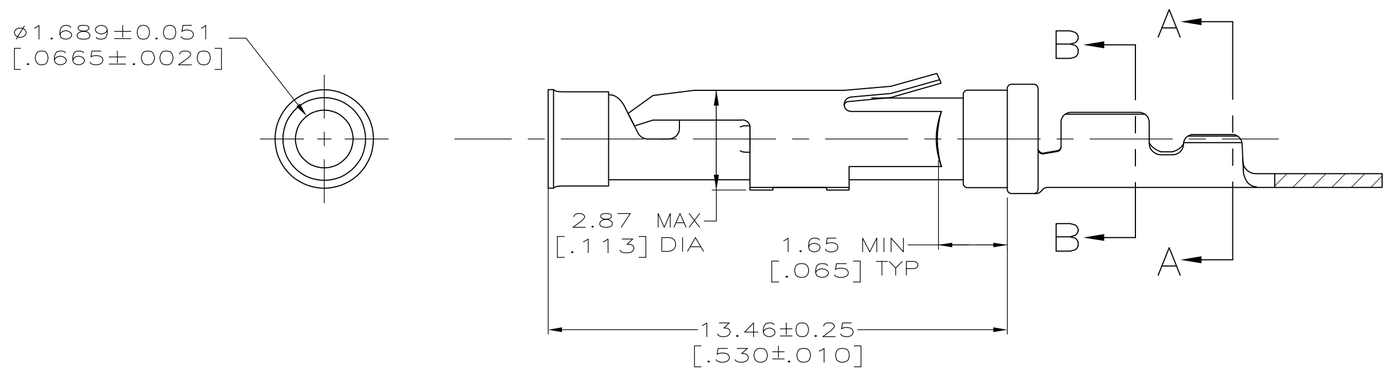

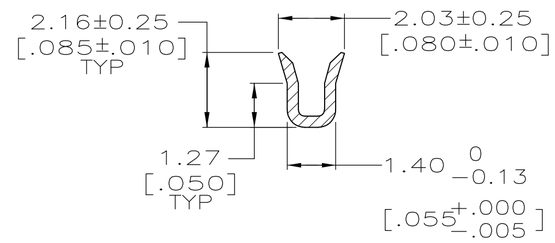

SECTION B–B

1. 0.76µm [.000030] MIN GOLD PER MIL-G-45204 ON MATING END FOR A LENGTH OF 5.08 [.200] MIN WITH 1.27µm [.000050] MATTE TIN PLATE IN WIRE CRIMP AREA, BOTH OVER 0.76µm [.000030] MIN NICKEL PER QQ-N-290.
2. 0.76µm [.000030] MIN GOLD PER MIL-G-45204 ON MATING END FOR A LENGTH OF 5.08 [.200] MIN WITH A UNIFORM GRADIENT TO 0.25µm [.000010] MIN GOLD PER MIL-G-45204 ON THE REMAINDER OVER 0.76µm [.000030] MIN NICKEL PER QQ-N-290.
3. 0.38µm [.000015] MIN GOLD PER MIL-G-45204 ON MATING END FOR A LENGTH OF 5.08 [.200] MIN WITH 1.27µm[.000050] MIN MATTE TIN PLATE IN WIRE CRIMP AREA, BOTH OVER 0.76µm [.000030] MIN NICKEL PER QQ-N-290.
4. 1.27µm [.000050] MIN GOLD PER MIL-G-45204 ON MATING END FOR A LENGTH OF 5.08 [.200] MIN WITH GOLD FLASH ON REMAINDER OVER 1.90µm [.000075] MIN NICKEL PER QQ-N-290.
5. GOLD PLATING NEED NOT APPEAR IN THIS AREA EXCEPT 1-66394-2 HAS GOLD PLATING ON INSULATION BARREL.
6. REVERSE REELED FOR MINI-APPLICATOR.
7. WIRE RANGE 26-30 AWG.
   INSULATION RANGE 0.36[.014]-0.76[.030].
8. 0.38µm [.000015] MIN GOLD PER MIL-G-45204 ON MATING END FOR A LENGTH OF 5.08 [.200] MIN, 1.27µm [.000050] MIN TIN-LEAD PER MIL-T-10727 FOR A LENGTH OF 5.69 [.224] MIN ON OPPOSITE END, BOTH OVER 1.27µm [.000050] MIN NICKEL PER QQ-N-290 ON ENTIRE CONTACT.
9. 0.38um [.000015] MIN GOLD PER MIL-G-45204 ON MATING END FOR A LENGTH OF 5.08 [.200] MIN, 1.27um [.000050] MIN TIN PER MIL-T-10727 FOR A LENGTH OF 5.69 [.224] MIN ON OPPOSITE END, BOTH OVER 1.27um [.000050] MIN NICKEL PER QQ-N-290 ON ENTIRE CONTACT.
10. OBSOLETE PARTS: OBSOLETE CIS STREAMLINING PER D.RENAUD/D.SINISI
11. OBSOLETE

SUPERSEDED BY 66394-7	6	9	–	~~1-66394-5~~
10 SUPERSEDED BY 66394-7	6	8	11 ~~66405-8~~	~~1-66394-4~~
OBSOLETE	6	4	–	~~1-66394-2~~
	6	1	66405-4	66394-8
	6	3	–	66394-7
	6	2	66405-1	66394-5
	STANDARD	1	66405-4	66394-4
	STANDARD	2	66405-1	66394-1
	REELING	BODY FINISH	LOOSE PIECE REF	PART NO.

THIS DRAWING IS A CONTROLLED DOCUMENT.

DIMENSIONS: mm [INCHES]

TOLERANCES UNLESS OTHERWISE SPECIFIED:
0 PLC ± –
1 PLC ± –
2 PLC ± 0.13 [.005]
3 PLC ± –
4 PLC ± –
ANGLES ± –

MATERIAL: SEE CALLOUTS
FINISH: SEE CALLOUTS

DWN R.SHIREY 08/06/91
CHK R.STONE 9-19-91
APVD –
PRODUCT SPEC –
APPLICATION SPEC –
WEIGHT –

TE Connectivity

NAME: SOCKET ASSEMBLY, .062, TYPE III+

SIZE	CAGE CODE	DRAWING NO	RESTRICTED TO
A2	00779	C-66394	–

CUSTOMER DRAWING | SCALE 8:1 | SHEET 1 OF 1 | REV Y

66394

1471-9 (3/11)