19-1531; Rev 3; 12/02

EVALUATION KIT AVAILABLE

400ksps, +5V, 8-/4-Channel, 12-Bit ADCs with +2.5V Reference and Parallel Interface

MAX1290/MAX1292

General Description

The MAX1290/MAX1292 low-power, 12-bit analog-to-digital converters (ADCs) feature a successive-approximation ADC, automatic power-down, fast wake-up (2µs), an on-chip clock, +2.5V internal reference, and a high-speed, byte-wide parallel interface. The devices operate with a single +5V analog supply and feature a V_{LOGIC} pin that allows them to interface directly with a +2.7V to +5.5V digital supply.

Power consumption is only 10mW (V_{DD} = V_{LOGIC}) at a 400ksps max sampling rate. Two software-selectable power-down modes enable the MAX1290/MAX1292 to be shut down between conversions; accessing the parallel interface returns them to normal operation. Powering down between conversions can cut supply current to under 10µA at reduced sampling rates.

Both devices offer software-configurable analog inputs for unipolar/bipolar and single-ended/pseudo-differential operation. In single-ended mode, the MAX1290 has eight input channels and the MAX1292 has four input channels (four and two input channels, respectively, when in pseudo-differential mode).

Excellent dynamic performance and low power, combined with ease of use and small package size, make these converters ideal for battery-powered and data-acquisition applications or for other circuits with demanding power consumption and space requirements.

The MAX1290/MAX1292 tri-states $\overline{INT}$ when $\overline{CS}$ goes high. Refer to MAX1262/MAX1264 if tri-stating $\overline{INT}$ is not desired.

The MAX1290 is available in a 28-pin QSOP package, while the MAX1292 comes in a 24-pin QSOP. For pin-compatible +3V, 12-bit versions, refer to the MAX1291/MAX1293 data sheet.

Applications

Industrial Control Systems	Data Logging
Energy Management	Patient Monitoring
Data-Acquisition Systems	Touchscreens

Ordering Information

PART	TEMP RANGE	PIN-PACKAGE	INL (LSB)
MAX1290ACEI	0°C to +70°C	28 QSOP	±0.5
MAX1290BCEI	0°C to +70°C	28 QSOP	±1
MAX1290AEEI	-40°C to +85°C	28 QSOP	±0.5
MAX1290BEEI	-40°C to +85°C	28 QSOP	±1

Ordering Information continued at end of data sheet.

Features

- **12-Bit Resolution, ±0.5 LSB Linearity**
- **+5V Single-Supply Operation**
- **User-Adjustable Logic Level (+2.7V to +5.5V)**
- **Internal +2.5V Reference**
- **Software-Configurable Analog Input Multiplexer**
  - **8-Channel Single-Ended/ 4-Channel Pseudo-Differential (MAX1290)**
  - **4-Channel Single-Ended/ 2-Channel Pseudo-Differential (MAX1292)**
- **Software-Configurable Unipolar/Bipolar Analog Inputs**
- **Low Current: 2.5mA (400ksps)**
  1.0mA (100ksps)
  400µA (10ksps)
  2µA (Shutdown)
- **Internal 6MHz Full-Power Bandwidth Track/Hold**
- **Byte-Wide Parallel (8 + 4) Interface**
- **Small Footprint: 28-Pin QSOP (MAX1290)**
  24-Pin QSOP (MAX1292)

Pin Configurations

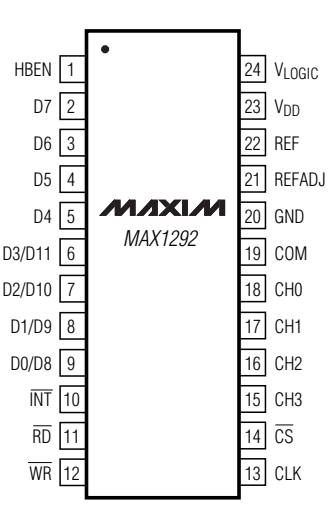

Pin Configurations continued at end of data sheet.

Typical Operating Circuits appear at end of data sheet.

For pricing, delivery, and ordering information, please contact Maxim/Dallas Direct! at 1-888-629-4642, or visit Maxim's website at www.maxim-ic.com.

400ksps, +5V, 8-/4-Channel, 12-Bit ADCs with +2.5V Reference and Parallel Interface

ABSOLUTE MAXIMUM RATINGS

V_{DD} to GND .....-0.3V to +6V
V_{LOGIC} to GND .....-0.3V to +6V
CH0–CH7, COM to GND .....-0.3V to (V_{DD} + 0.3V)
REF, REFADJ to GND .....-0.3V to (V_{DD} + 0.3V)
Digital Inputs to GND .....-0.3V to +6V
Digital Outputs (D0–D11, $\overline{INT}$)
to GND ..... -0.3V to (V_{LOGIC} + 0.3V)

Continuous Power Dissipation (T_A = +70°C)
24-Pin QSOP (derate 9.5mW/°C above +70°C).....762mW
28-Pin QSOP (derate 8.00mW/°C above +70°C).....667mW
Operating Temperature Ranges
MAX1290_C_ _/MAX1292_C_ _ ..... 0°C to +70°C
MAX1290_E_ _/MAX1292_E_ _ .....-40°C to +85°C
Storage Temperature Range .....-65°C to +150°C
Lead Temperature (soldering, 10s) .....+300°C

Stresses beyond those listed under "Absolute Maximum Ratings" may cause permanent damage to the device. These are stress ratings only, and functional operation of the device at these or any other conditions beyond those indicated in the operational sections of the specifications is not implied. Exposure to absolute maximum rating conditions for extended periods may affect device reliability.

ELECTRICAL CHARACTERISTICS

(V_{DD} = V_{LOGIC} = +5V ±10%, COM = GND, REFADJ = V_{DD}, V_{REF} = +2.5V, 4.7µF capacitor at REF pin, f_{CLK} = 7.6MHz (50% duty cycle), T_A = T_{MIN} to T_{MAX}, unless otherwise noted. Typical values are at T_A = +25°C.)

PARAMETER	SYMBOL	CONDITIONS	MIN	TYP	MAX	UNITS
DC ACCURACY (Note 1)						
Resolution	RES		12			Bits
Relative Accuracy (Note 2)	INL	MAX129_A			±0.5	LSB
		MAX129_B			±1	
Differential Nonlinearity	DNL	No missing codes over temperature			±1	LSB
Offset Error					±4	LSB
Gain Error (Note 3)					±4	LSB
Gain Temperature Coefficient				±2		ppm/°C
Channel-to-Channel Offset Matching				±0.2		LSB
DYNAMIC SPECIFICATIONS ($f_{IN(sine\ wave)}$ = 50kHz, V_{IN} = 2.5V_{P-P}, 400ksps, external f_{CLK} = 7.6MHz, bipolar input mode)						
Signal-to-Noise Plus Distortion	SINAD		67	70		dB
Total Harmonic Distortion (including 5th-order harmonic)	THD				-80	dB
Spurious-Free Dynamic Range	SFDR		80			dB
Intermodulation Distortion	IMD	f_{IN1} = 49kHz, f_{IN2} = 52kHz		76		dB
Channel-to-Channel Crosstalk		f_{IN} = 175kHz, V_{IN} = 2.5V_{P-P} (Note 4)		-78		dB
Full-Linear Bandwidth		SINAD > 68dB		350		kHz
Full-Power Bandwidth		-3dB rolloff		6		MHz
CONVERSION RATE						
Conversion Time (Note 5)	t_{CONV}	External clock mode	2.1			µs
		External acquisition/internal clock mode	2.5	3.0	3.5	
		Internal acquisition/internal clock mode	3.2	3.6	4	
T/H Acquisition Time	t_{ACQ}				400	ns
Aperture Delay		External acquisition or external clock mode		25		ns
Aperture Jitter		External acquisition or external clock mode		<50		ps
		Internal acquisition/internal clock mode		<200		
External Clock Frequency	f_{CLK}		0.1		7.6	MHz
Duty Cycle			30		70	%

ELECTRICAL CHARACTERISTICS (continued)

(V_{DD} = V_{LOGIC} = +5V ±10%, COM = GND, REFADJ = V_{DD}, V_{REF} = +2.5V, 4.7µF capacitor at REF pin, f_{CLK} = 7.6MHz (50% duty cycle), T_A = T_{MIN} to T_{MAX}, unless otherwise noted. Typical values are at T_A = +25°C.)

PARAMETER	SYMBOL	CONDITIONS	MIN	TYP	MAX	UNITS
ANALOG INPUTS						
Analog Input Voltage Range Single Ended and Differential (Note 6)	V_{IN}	Unipolar, V_{COM} = 0	0		V_{REF}	V
		Bipolar, V_{COM} = V_{REF} / 2	-V_{REF}/2		+V_{REF}/2	
Multiplexer Leakage Current		On/off-leakage current, V_{IN} = 0 or V_{DD}		±0.01	±1	µA
Input Capacitance	C_{IN}			12		pF
INTERNAL REFERENCE						
REF Output Voltage			2.49	2.5	2.51	V
REF Short-Circuit Current				15		mA
REF Temperature Coefficient	TC_{REF}			±20		ppm/°C
REFADJ Input Range		For small adjustments		±100		mV
REFADJ High Threshold		To power down the internal reference	V_{DD} - 1			V
Load Regulation (Note 7)		0 to 0.5mA output load		0.2		mV/mA
Capacitive Bypass at REFADJ				0.01	1	µF
Capacitive Bypass at REF			4.7		10	µF
EXTERNAL REFERENCE AT REF						
REF Input Voltage Range	V_{REF}		1.0		V_{DD} + 50mV	V
Shutdown REF Input Current	I_{REF}	V_{REF} = 2.5V, f_{SAMPLE} = 400ksps		200	300	µA
		Shutdown mode			2	
DIGITAL INPUTS AND OUTPUTS						
Input Voltage High	V_{IH}	V_{LOGIC} = 4.5V	4.0			V
		V_{LOGIC} = 2.7V	2.0			
Input Voltage Low	V_{IL}				0.8	V
Input Hysteresis	V_{HYS}			200		mV
Input Leakage Current	I_{IN}	V_{IN} = 0 or V_{DD}		±0.1	±1	µA
Input Capacitance	C_{IN}			15		pF
Output Voltage Low	V_{OL}	I_{SINK} = 1.6mA			0.4	V
Output Voltage High	V_{OH}	I_{SOURCE} = 1mA	V_{LOGIC} - 0.5			V
Three-State Leakage Current	$I_{LEAKAGE}$	$\overline{CS}$ = V_{DD}		±0.1	±1	µA
Three-State Output Capacitance	C_{OUT}	$\overline{CS}$ = V_{DD}		15		pF

400ksps, +5V, 8-/4-Channel, 12-Bit ADCs with +2.5V Reference and Parallel Interface

ELECTRICAL CHARACTERISTICS (continued)

(V_{DD} = V_{LOGIC} = +5V ±10%, COM = GND, REFADJ = V_{DD}, V_{REF} = +2.5V, 4.7µF capacitor at REF pin, f_{CLK} = 7.6MHz (50% duty cycle), T_A = T_{MIN} to T_{MAX}, unless otherwise noted. Typical values are at T_A = +25°C.)

PARAMETER	SYMBOL	CONDITIONS		MIN	TYP	MAX	UNITS
POWER REQUIREMENTS							
Analog Supply Voltage	V_{DD}			4.5		5.5	V
Digital Supply Voltage	V_{LOGIC}			2.7		V_{DD} + 0.3	V
Positive Supply Current	I_{DD}	Operating mode, f_{SAMPLE} = 400ksps	Internal reference		2.9	3.4	mA
			External reference		2.5	2.9	
		Standby mode	Internal reference		1.0	1.2	
			External reference		0.5	0.8	
		Shutdown mode			2	10	µA
V_{LOGIC} Current	I_{LOGIC}	C_L = 20pF	f_{SAMPLE} = 400ksps			200	µA
			Nonconverting		2	10	
Power-Supply Rejection	PSR	V_{DD} = +5V ±10%, full-scale input			±0.3	±0.9	mV

TIMING CHARACTERISTICS

(V_{DD} = V_{LOGIC} = +5V ±10%, COM = GND, REFADJ = V_{DD}, V_{REF} = +2.5V, 4.7µF capacitor at REF pin, f_{CLK} = 7.6MHz (50% duty cycle), T_A = T_{MIN} to T_{MAX}, unless otherwise noted. Typical values are at T_A = +25°C.)

PARAMETER	SYMBOL	CONDITIONS	MIN	TYP	MAX	UNITS
CLK Period	t_{CP}		132			ns
CLK Pulse Width High	t_{CH}		40			ns
CLK Pulse Width Low	t_{CL}		40			ns
Data Valid to $\overline{WR}$ Rise Time	t_{DS}		40			ns
$\overline{WR}$ Rise to Data Valid Hold Time	t_{DH}		0			ns
$\overline{WR}$ to CLK Fall Setup Time	t_{CWS}		40			ns
CLK Fall to $\overline{WR}$ Hold Time	t_{CWH}		40			ns
$\overline{CS}$ to CLK or $\overline{WR}$ Setup Time	t_{CSWS}		60			ns
CLK or $\overline{WR}$ to $\overline{CS}$ Hold Time	t_{CSWH}		0			ns
$\overline{CS}$ Pulse Width	t_{CS}		100			ns
$\overline{WR}$ Pulse Width (Note 8)	t_{WR}		60			ns

TIMING CHARACTERISTICS (continued)

(V_{DD} = V_{LOGIC} = +5V ±10%, COM = GND, REFADJ = V_{DD}, V_{REF} = +2.5V, 4.7µF capacitor at REF pin, f_{CLK} = 7.6MHz (50% duty cycle), T_A = T_{MIN} to T_{MAX}, unless otherwise noted. Typical values are at T_A = +25°C.)

PARAMETER	SYMBOL	CONDITIONS	MIN	TYP	MAX	UNITS
$\overline{CS}$ Rise to Output Disable	t_{TC}	C_{LOAD} = 20pF, Figure 1	10		60	ns
$\overline{RD}$ Rise to Output Disable	t_{TR}	C_{LOAD} = 20pF, Figure 1	10		40	ns
$\overline{RD}$ Fall to Output Data Valid	t_{DO}	C_{LOAD} = 20pF, Figure 1	10		50	ns
HBEN Rise to Output Data Valid	t_{DO1}	C_{LOAD} = 20pF, Figure 1	10		50	ns
HBEN Fall to Output Data Valid	t_{DO1}	C_{LOAD} = 20pF, Figure 1	10		80	ns
$\overline{RD}$ Fall to $\overline{INT}$ High Delay	t_{INT1}	C_{LOAD} = 20pF, Figure 1			50	ns
$\overline{CS}$ Fall to Output Data Valid	t_{DO2}	C_{LOAD} = 20pF, Figure 1			100	ns

Note 1: Tested at V_{DD} = +5V, COM = GND, = 0, unipolar single-ended input mode.
Note 2: Relative accuracy is the deviation of the analog value at any code from its theoretical value after offset and gain errors have been removed.
Note 3: Offset nulled.
Note 4: On channel is grounded; sine wave applied to off channels.
Note 5: Conversion time is defined as the number of clock cycles times the clock period; clock has 50% duty cycle.
Note 6: Input voltage range referenced to negative input. The absolute range for the analog inputs is from GND to V_{DD}.
Note 7: External load should not change during conversion for specified accuracy.
Note 8: When bit 5 is set low for internal acquisition, $\overline{WR}$ must not return low until after the first falling clock edge of the conversion.

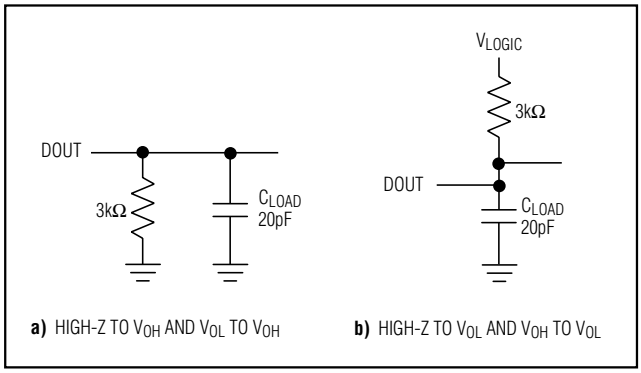

Figure 1. Load Circuits for Enable/Disable Times

400ksps, +5V, 8-/4-Channel, 12-Bit ADCs with +2.5V Reference and Parallel Interface

Typical Operating Characteristics

(V_{DD} = V_{LOGIC} = +5V, V_{REF} = +2.500V, f_{CLK} = 7.6MHz, C_L = 20pF, T_A = +25°C, unless otherwise noted.)

INTEGRAL NONLINEARITY vs. DIGITAL OUTPUT CODE

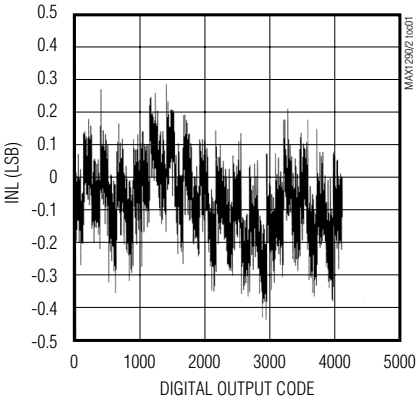

DIFFERENTIAL NONLINEARITY vs. DIGITAL OUTPUT CODE

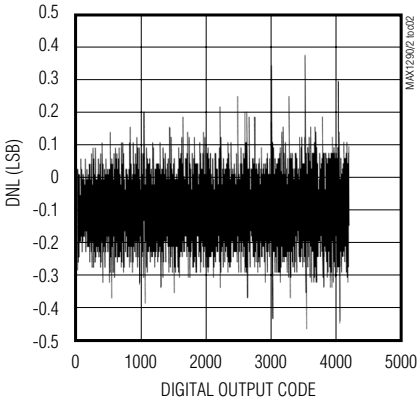

SUPPLY CURRENT vs. SAMPLE FREQUENCY

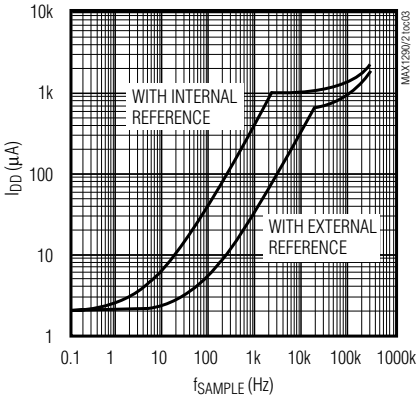

SUPPLY CURRENT vs. SUPPLY VOLTAGE

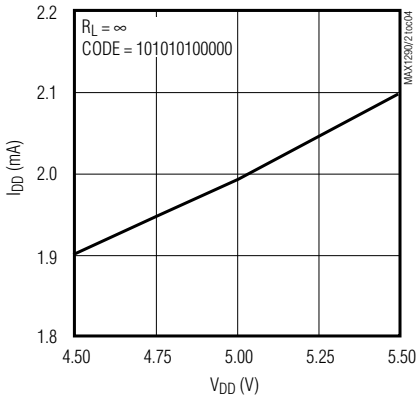

SUPPLY CURRENT vs. TEMPERATURE

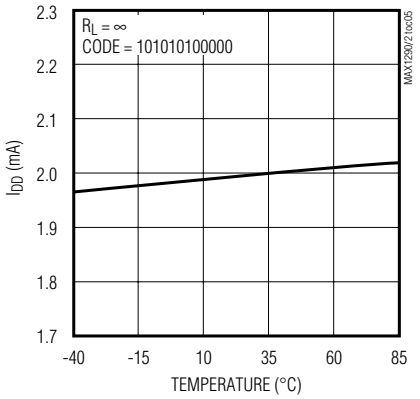

STANDBY CURRENT vs. SUPPLY VOLTAGE

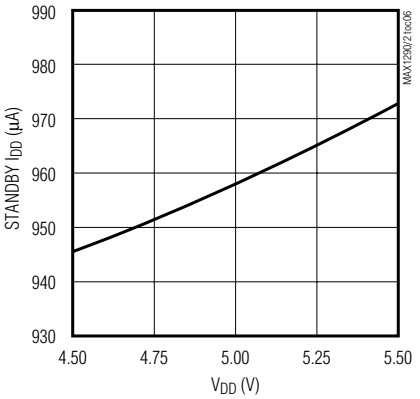

STANDBY CURRENT vs. TEMPERATURE

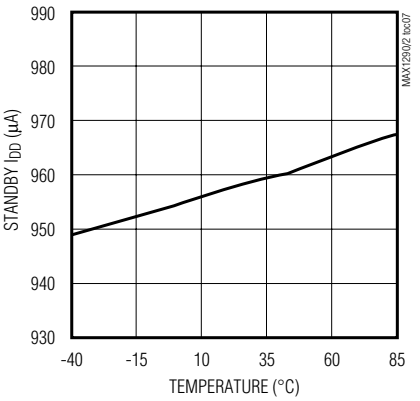

POWER-DOWN CURRENT vs. SUPPLY VOLTAGE

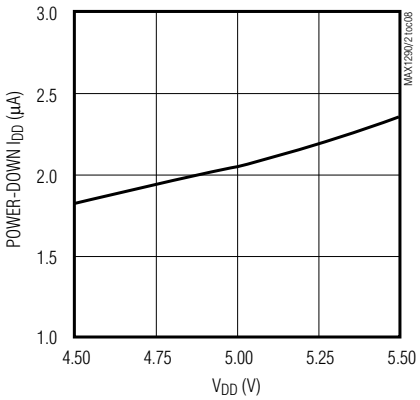

POWER-DOWN CURRENT vs. TEMPERATURE

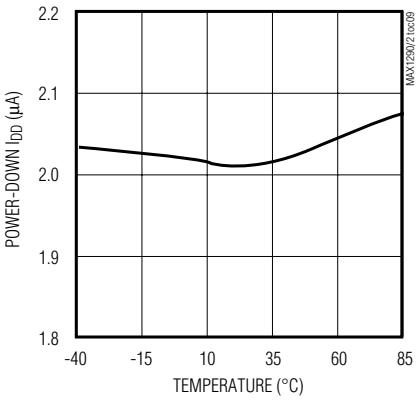

Typical Operating Characteristics (continued)

(V_{DD} = V_{LOGIC} = +5V, V_{REF} = +2.500V, f_{CLK} = 7.6MHz, C_L = 20pF, T_A = +25°C, unless otherwise noted.)

INTERNAL REFERENCE VOLTAGE vs. SUPPLY VOLTAGE

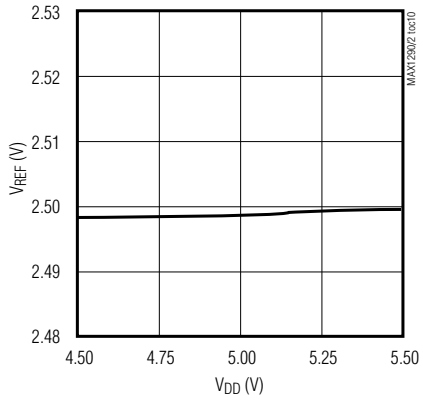

INTERNAL REFERENCE VOLTAGE vs. TEMPERATURE

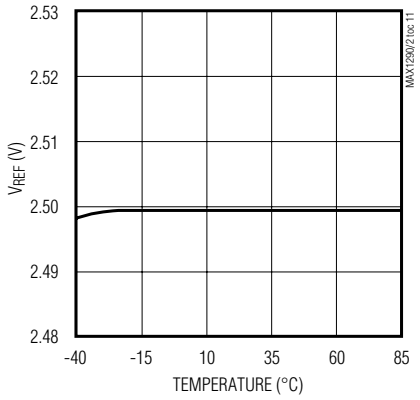

OFFSET ERROR vs. SUPPLY VOLTAGE

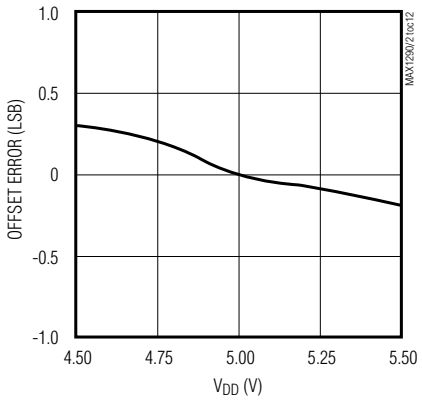

OFFSET ERROR vs. TEMPERATURE

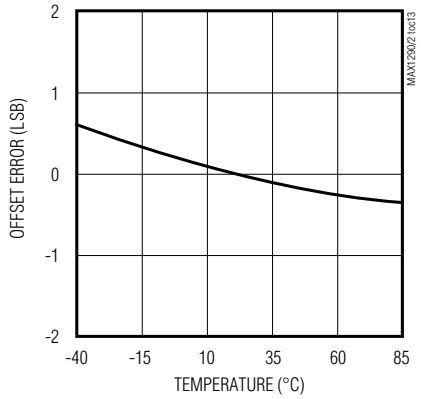

GAIN ERROR vs. SUPPLY VOLTAGE

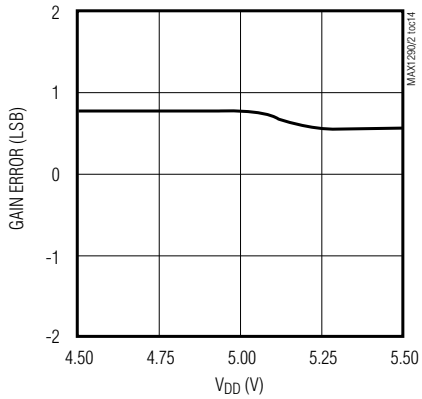

GAIN ERROR vs. TEMPERATURE

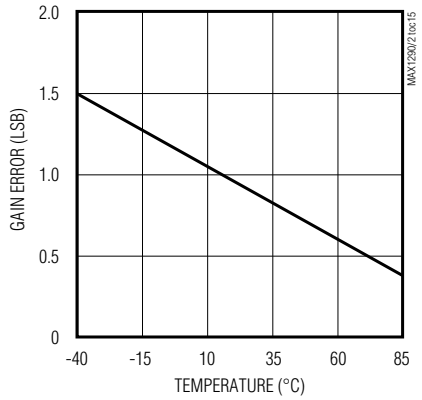

LOGIC SUPPLY CURRENT vs. SUPPLY VOLTAGE

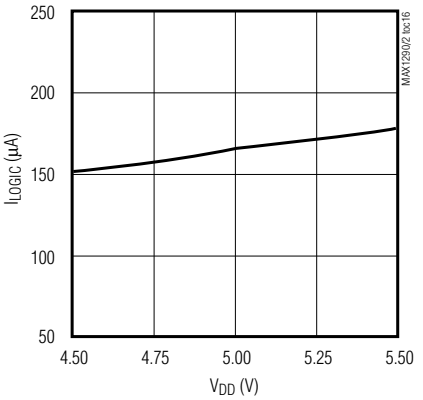

LOGIC SUPPLY CURRENT vs. TEMPERATURE

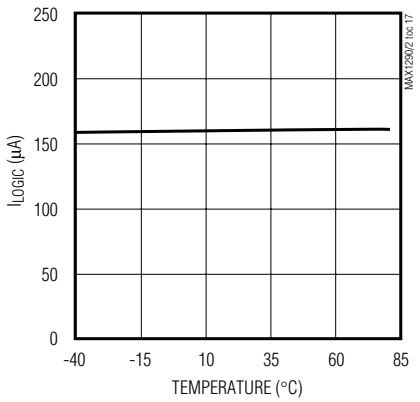

FFT PLOT

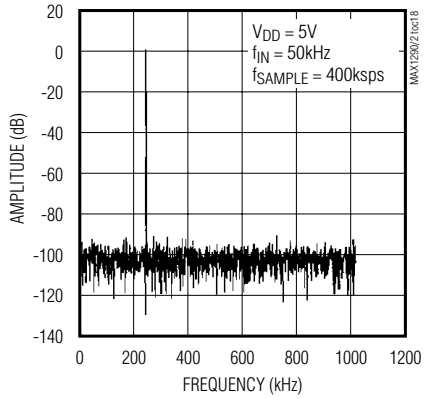

400ksps, +5V, 8-/4-Channel, 12-Bit ADCs with +2.5V Reference and Parallel Interface

Pin Description

PIN		NAME	FUNCTION
MAX1290	MAX1292		
1	1	HBEN	High Byte Enable. Used to multiplex the 12-bit conversion result. 1: Four MSBs are multiplexed on the data bus. 0: Eight LSBs are available on the data bus.
2	2	D7	Three-State Digital I/O Line (D7)
3	3	D6	Three-State Digital I/O Line (D6)
4	4	D5	Three-State Digital I/O Line (D5)
5	5	D4	Three-State Digital I/O Line (D4)
6	6	D3/D11	Three-State Digital I/O Line (D3, HBEN = 0; D11, HBEN = 1)
7	7	D2/D10	Three-State Digital I/O Line (D2, HBEN = 0; D10, HBEN = 1)
8	8	D1/D9	Three-State Digital I/O Line (D1, HBEN = 0; D9, HBEN = 1)
9	9	D0/D8	Three-State Digital I/O Line (D0, HBEN = 0; D8, HBEN = 1)
10	10	$\overline{INT}$	$\overline{INT}$ goes low when the conversion is complete and the output data is ready.
11	11	$\overline{RD}$	Active-Low Read Select. If $\overline{CS}$ is low, a falling edge on $\overline{RD}$ enables the read operation on the data bus.
12	12	$\overline{WR}$	Active-Low Write Select. When $\overline{CS}$ is low in internal acquisition mode, a rising edge on $\overline{WR}$ latches in configuration data and starts an acquisition plus a conversion cycle. When $\overline{CS}$ is low in external acquisition mode, the first rising edge on $\overline{WR}$ ends acquisition and starts a conversion.
13	13	CLK	Clock Input. In external clock mode, drive CLK with a TTL/CMOS-compatible clock. In internal clock mode, connect this pin to either V_{DD} or GND.
14	14	$\overline{CS}$	Active-Low Chip Select. When $\overline{CS}$ is high, digital outputs ($\overline{INT}$, D7–D0) are high impedance.
15	—	CH7	Analog Input Channel 7
16	—	CH6	Analog Input Channel 6
17	—	CH5	Analog Input Channel 5
18	—	CH4	Analog Input Channel 4
19	15	CH3	Analog Input Channel 3
20	16	CH2	Analog Input Channel 2
21	17	CH1	Analog Input Channel 1
22	18	CH0	Analog Input Channel 0
23	19	COM	Ground Reference for Analog Inputs. Sets zero-code voltage in single-ended mode and must be stable to ±0.5 LSB during conversion.
24	20	GND	Analog and Digital Ground
25	21	REFADJ	Bandgap Reference Output/Bandgap Reference Buffer Input. Bypass to GND with a 0.01µF capacitor. When using an external reference, connect REFADJ to V_{DD} to disable the internal bandgap reference.
26	22	REF	Bandgap Reference Buffer Output/External Reference Input. Add a 4.7µF capacitor to GND when using the internal reference.
27	23	V_{DD}	Analog +5V Power Supply. Bypass with a 0.1µF capacitor to GND.
28	24	V_{LOGIC}	Digital Power Supply. V_{LOGIC} powers the digital outputs of the data converter and can range from +2.7V to V_{DD} + 300mV.

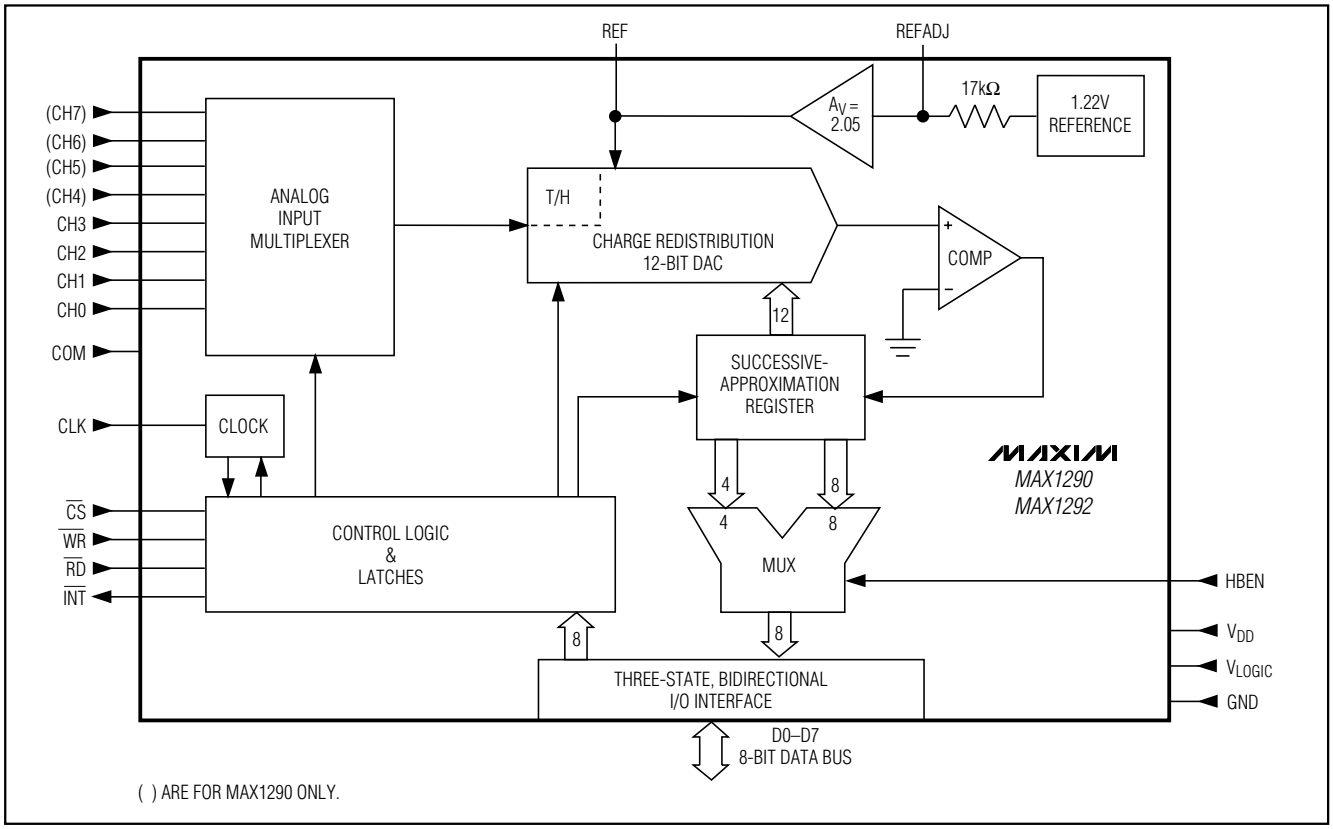

Figure 2. Simplified Functional Diagram of 8-/4-Channel MAX1290/MAX1292

Detailed Description

Converter Operation

The MAX1290/MAX1292 ADCs use a successive-approximation (SAR) conversion technique and an input track-and-hold (T/H) stage to convert an analog input signal to a 12-bit digital output. Their parallel (8 + 4) output format provides an easy interface to standard microprocessors (µPs). Figure 2 shows the simplified internal architecture of the MAX1290/MAX1292.

Single-Ended and Pseudo-Differential Operation

The sampling architecture of the ADC's analog comparator is illustrated in the equivalent input circuits in Figures 3a and 3b. In single-ended mode, IN+ is internally switched to channels CH0–CH7 for the MAX1290 (Figure 3a) and to CH0–CH3 for the MAX1292 (Figure 3b), while IN- is switched to COM (Table 3). In differential mode, IN+ and IN- are selected from analog input pairs (Table 4).

In differential mode, IN- and IN+ are internally switched to either of the analog inputs. This configuration is pseudo-differential in that only the signal at IN+ is sampled. The return side (IN-) must remain stable within ±0.5 LSB (±0.1 LSB for best performance) with respect to GND during a conversion. To accomplish this, connect a 0.1µF capacitor from IN- (the selected input) to GND.

During the acquisition interval, the channel selected as the positive input (IN+) charges capacitor C_{HOLD}. At the end of the acquisition interval, the T/H switch opens, retaining charge on C_{HOLD} as a sample of the signal at IN+.

The conversion interval begins with the input multiplexer switching C_{HOLD} from the positive input (IN+) to the negative input (IN-). This unbalances node ZERO at the comparator's positive input. The capacitive digital-to-analog converter (DAC) adjusts during the remainder of the conversion cycle to restore node ZERO to 0V within the limits of 12-bit resolution. This action is equivalent to transferring a 12pF $[(V_{IN+}) - (V_{IN-})]$ charge from C_{HOLD} to the binary-weighted capacitive DAC, which in turn forms a digital representation of the analog input signal.

400ksps, +5V, 8-/4-Channel, 12-Bit ADCs with +2.5V Reference and Parallel Interface

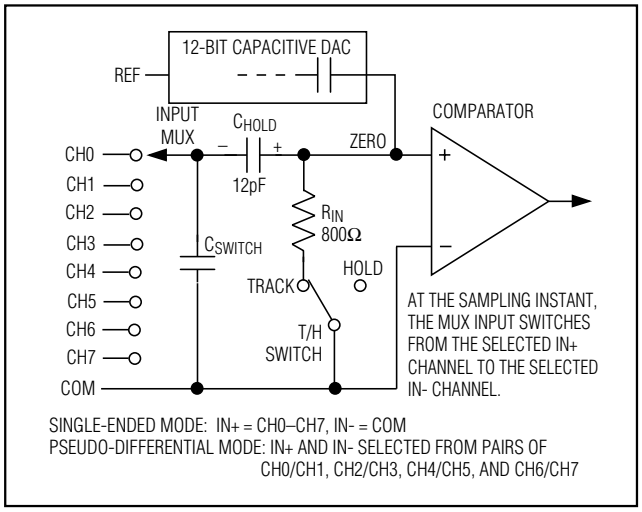

Figure 3a. MAX1290 Simplified Input Structure

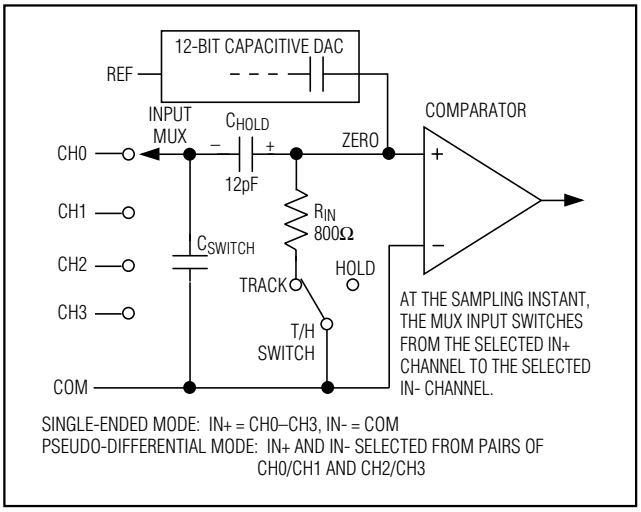

Figure 3b. MAX1292 Simplified Input Structure

Analog Input Protection

Internal protection diodes, which clamp the analog input to V_{DD} and GND, allow each input channel to swing within (GND - 300mV) to (V_{DD} + 300mV) without damage. However, for accurate conversions near full scale, both inputs must not exceed (V_{DD} + 50mV) or be less than (GND - 50mV).

If an off-channel analog input voltage exceeds the supplies by more than 50mV, limit the forward-bias input current to 4mA.

Track/Hold

The MAX1290/MAX1292 T/H stage enters its tracking mode on the rising edge of $\overline{WR}$. In external acquisition mode, the part enters its hold mode on the next rising edge of $\overline{WR}$. In internal acquisition mode, the part enters its hold mode on the fourth falling edge of clock after writing the control byte. Note that, in internal clock mode, this is approximately 1µs after writing the control byte.

In single-ended operation, IN- is connected to COM and the converter samples the positive "+" input. In pseudo-differential operation, IN- connects to the negative input "-" and the difference of |(IN+) - (IN-)| is sampled. At the beginning of the next conversion, the positive input connects back to IN+ and C_{HOLD} charges to the input signal.

The time required for the T/H stage to acquire an input signal depends on how quickly its input capacitance is charged. If the input signal's source impedance is high, the acquisition time lengthens and more time must be allowed between conversions. The acquisition time, t_{ACQ}, is the maximum time the device takes to acquire the signal and is also the minimum time required for the signal to be acquired. Calculate this with the following equation:

$$t_{ACQ} = 9\,(R_S + R_{IN})\,C_{IN}$$

where R_S is the source impedance of the input signal, R_{IN} (800Ω) is the input resistance, and C_{IN} (12pF) is the input capacitance of the ADC. Source impedances below 3kΩ have no significant impact on the MAX1290/MAX1292's AC performance.

Higher source impedances can be used if a 0.01µF capacitor is connected to the individual analog inputs. Along with the input impedance, this capacitor forms an RC filter, limiting the ADC's signal bandwidth.

Input Bandwidth

The MAX1290/MAX1292 T/H stage offers a 350kHz full-linear and a 6MHz full-power bandwidth that make it possible to digitize high-speed transients and measure periodic signals with bandwidths exceeding the ADC's sampling rate by using undersampling techniques. To avoid aliasing high-frequency signals into the frequency band of interest, anti-alias filtering is recommended.

Starting a Conversion

Initiate a conversion by writing a control byte that selects the multiplexer channel and configures the MAX1290/MAX1292 for either unipolar or bipolar operation. A write pulse ($\overline{WR}$ + $\overline{CS}$) can either start an acquisition interval or initiate a combined acquisition plus

conversion. The sampling interval occurs at the end of the acquisition interval. The ACQMOD (acquisition mode) bit in the input control byte (Table 1) offers two options for acquiring the signal: an internal and an external acquisition. The conversion period lasts for 13 clock cycles in either the internal or external clock or acquisition mode. Writing a new control byte during a conversion cycle aborts the conversion and starts a new acquisition interval.

Internal Acquisition

Select internal acquisition by writing the control byte with the ACQMOD bit cleared (ACQMOD = 0). This causes the write pulse to initiate an acquisition interval whose duration is internally timed. Conversion starts when this acquisition interval (three external clock cycles or approximately 1µs in internal clock mode) ends (Figure 4). Note that, when the internal acquisition is combined with the internal clock, the aperture jitter can be as high as 200ps. Internal clock users wishing to achieve the 50ps jitter specification should always use external acquisition mode.

External Acquisition

Use external acquisition mode for precise control of the sampling aperture and/or dependent control of acquisition and conversion times. The user controls acquisition and start-of-conversion with two separate write pulses. The first pulse, written with ACQMOD = 1, starts an acquisition interval of indeterminate length. The second write pulse, written with ACQMOD = 0 (all other bits in the control byte are unchanged), terminates acquisition and starts conversion on $\overline{WR}$ rising edge (Figure 5).

The address bits for the input multiplexer must have the same values on the first and second write pulses. Power-down mode bits (PD0, PD1) can assume new values on the second write pulse (see the *Power-Down Modes* section). Changing other bits in the control byte corrupts the conversion.

Reading a Conversion

A standard interrupt signal, $\overline{INT}$, is provided to allow the MAX1290/MAX1292 to flag the microprocessor when the conversion has ended and a valid result is available. $\overline{INT}$ goes low when the conversion is complete and the output data is ready (Figures 4 and 5). $\overline{INT}$ returns high on the first read cycle or if a new control byte is written.

Selecting Clock Mode

The MAX1290/MAX1292 operate with an internal or external clock. Control bits D6 and D7 select either internal or external clock mode. The part retains the last-requested clock mode if a power-down mode is selected in the current input word. For both internal and external clock mode, internal or external acquisition

Table 1. Control Byte Functional Description

BIT	NAME	FUNCTION		
D7, D6	PD1, PD0	**PD1** and **PD0** select the various clock and power-down modes.		
		0	**0**	Full Power-Down Mode. Clock mode is unaffected.
		0	**1**	Standby Power-Down Mode. Clock mode is unaffected.
		1	**0**	Normal Operation Mode. Internal clock mode is selected.
		1	**1**	Normal Operation Mode. External clock mode is selected.
D5	ACQMOD	ACQMOD = 0: Internal Acquisition Mode ACQMOD = 1: External Acquisition Mode		
D4	SGL/$\overline{DIF}$	SGL/$\overline{DIF}$ = 0: Pseudo-Differential Analog Input Mode SGL/$\overline{DIF}$ = 1: Single-Ended Analog Input Mode In single-ended mode, input signals are referred to COM. In pseudo-differential mode, the voltage difference between two channels is measured (Tables 2, 3).		
D3	UNI/$\overline{BIP}$	UNI/$\overline{BIP}$ = 0: Bipolar Mode UNI/$\overline{BIP}$ = 1: Unipolar Mode In unipolar mode, an analog input signal from 0 to V_{REF} can be converted; in bipolar mode, the signal can range from $-V_{REF}/2$ to $+V_{REF}/2$.		
D2, D1, D0	A2, A1, A0	Address bits A2, A1, A0 select which of the 8/4 (MAX1290/MAX1292) channels is to be converted (Tables 3, 4).		

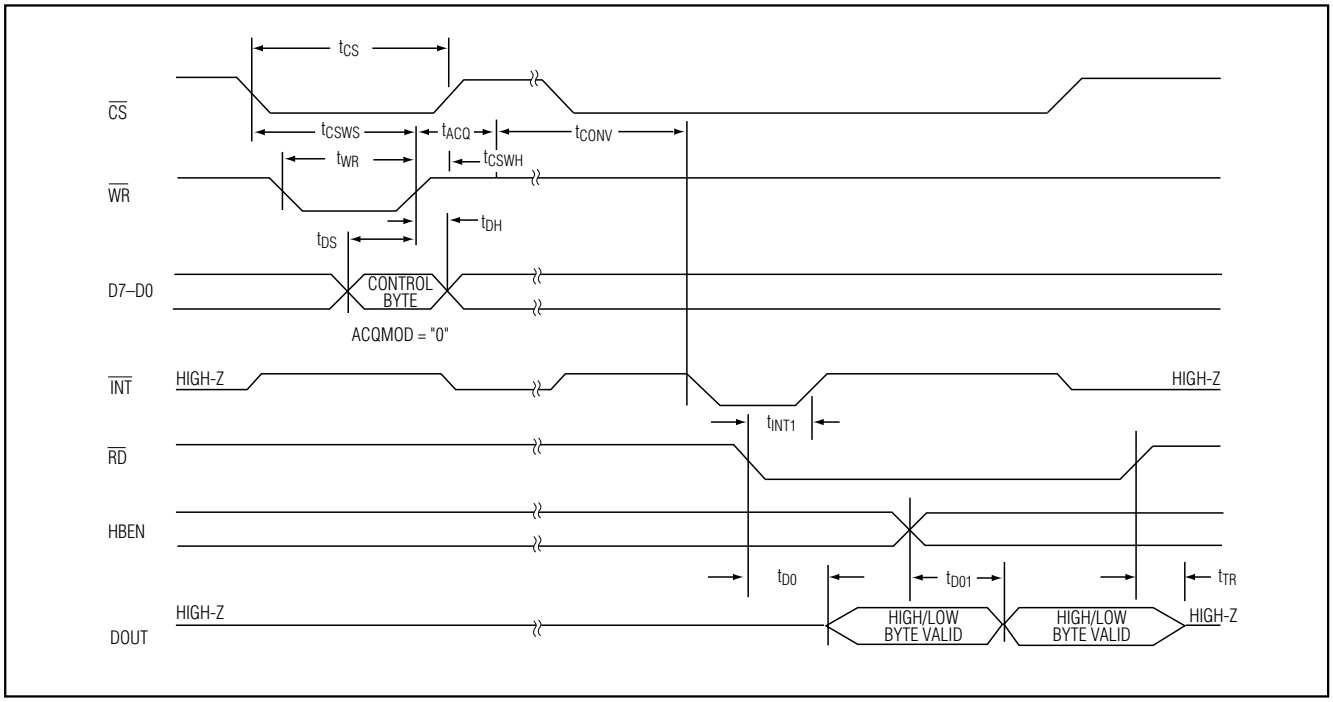

Figure 4. Conversion Timing Using Internal Acquisition Mode

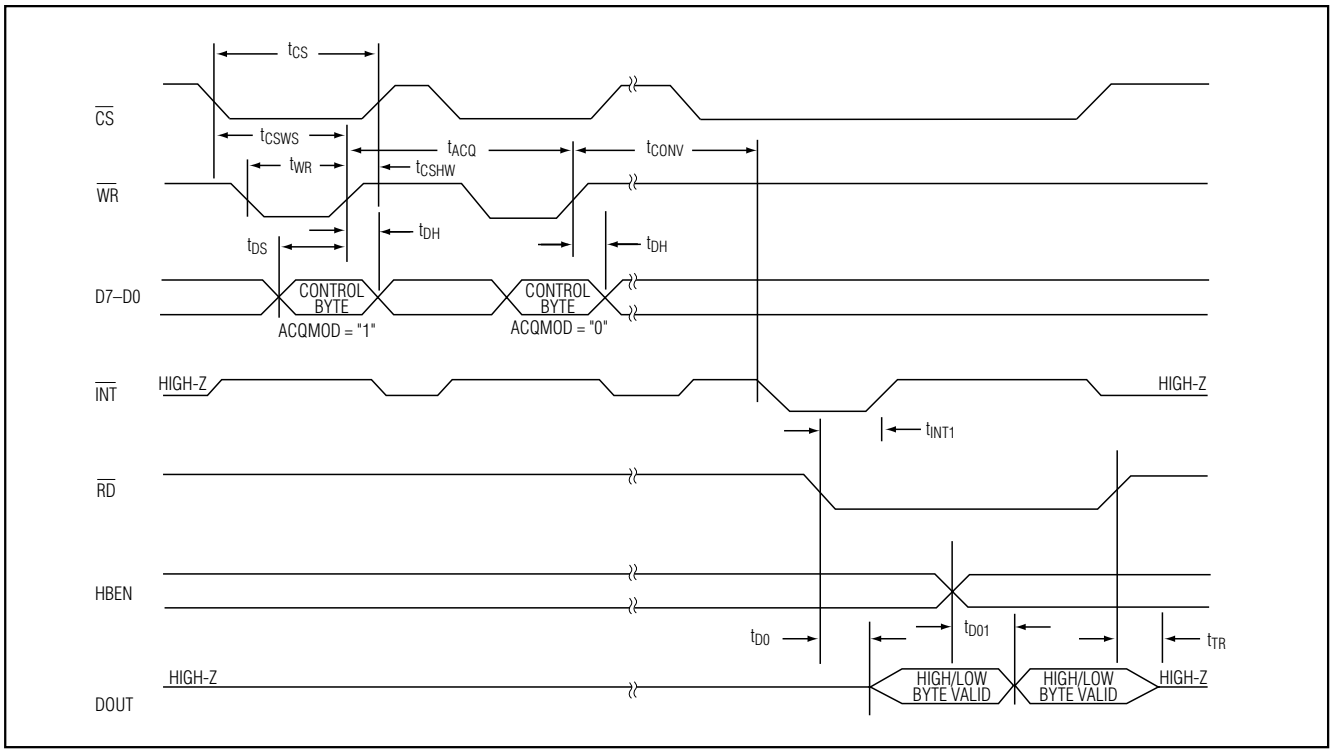

Figure 5. Conversion Timing Using External Acquisition Mode

can be used. At power-up, the MAX1290/MAX1292 enter the default external clock mode.

Internal Clock Mode

Select internal clock mode to release the µP from the burden of running the SAR conversion clock. To select this mode, bit D7 of the control byte must be set to 1 and bit D6 must be set to 0; the internal clock frequency is then selected, resulting in a 3.6µs conversion time. When using the internal clock mode, connect the CLK pin either high or low to prevent the pin from floating.

External Clock Mode

To select the external clock mode, bits D6 and D7 of the control byte must be set to 1. Figure 6a shows the clock and $\overline{WR}$ timing relationship for internal and external (Figure 6b) acquisition modes with an external clock. Proper operation requires a 100kHz to 7.6MHz clock frequency with 30% to 70% duty cycle. Operating the MAX1290/MAX1292 with clock frequencies lower than 100kHz is not recommended, because it causes a voltage droop across the hold capacitor in the T/H stage that results in degraded performance.

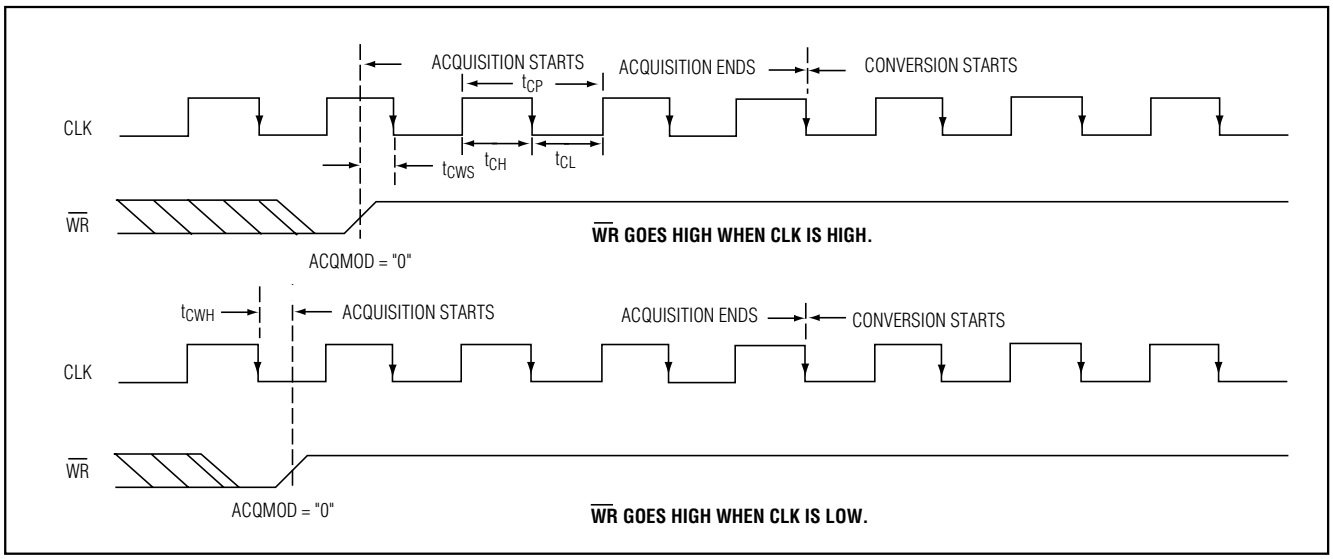

Figure 6a. External Clock and $\overline{WR}$ Timing (Internal Acquisition Mode)

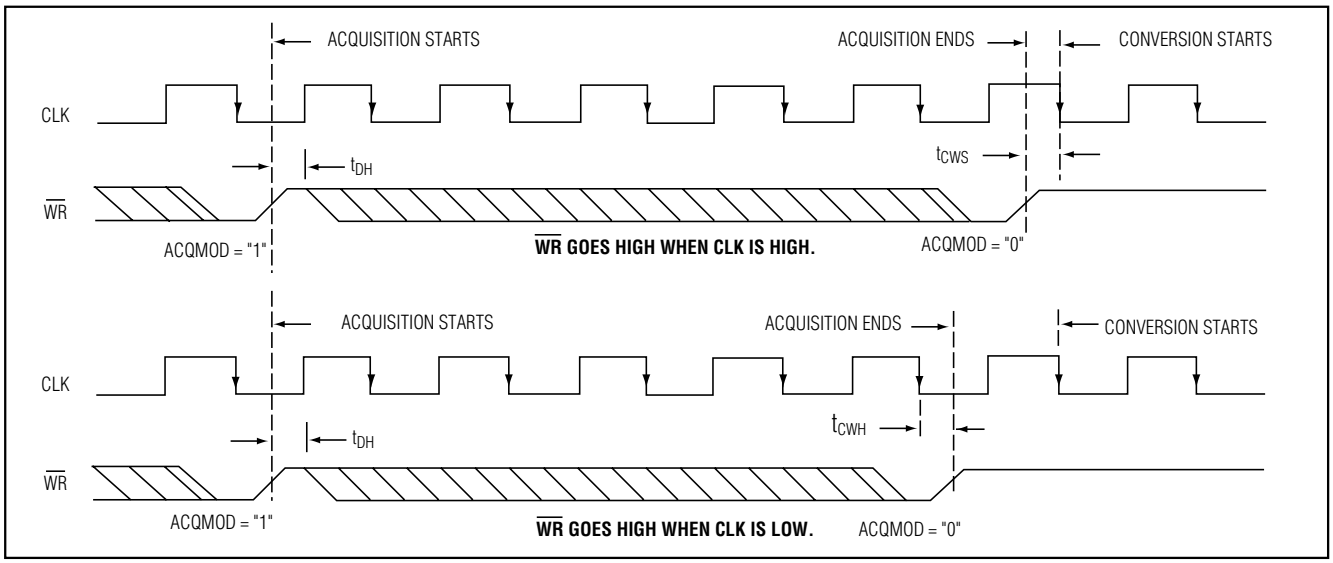

Figure 6b. External Clock and $\overline{WR}$ Timing (External Acquisition Mode)

400ksps, +5V, 8-/4-Channel, 12-Bit ADCs with +2.5V Reference and Parallel Interface

Digital Interface

Input (control byte) and output data are multiplexed on a three-state parallel interface. This parallel interface (I/O) can easily be interfaced with standard µPs. The signals $\overline{CS}$, $\overline{WR}$, and $\overline{RD}$ control the write and read operations. $\overline{CS}$ represents the chip-select signal, which enables a µP to address the MAX1290/MAX1292 as an I/O port. When high, $\overline{CS}$ disables the CLK, $\overline{WR}$, and $\overline{RD}$ inputs and forces the interface into a high-impedance (high-Z) state.

Input Format

The control byte is latched into the device on pins D7–D0 during a write command. Table 2 shows the control byte format.

Output Format

The output format for the MAX1290/MAX1292 is binary in unipolar mode and two's complement in bipolar mode. When reading the output data, $\overline{CS}$ and $\overline{RD}$ must be low. When HBEN = 0, the lower 8 bits are read. With HBEN = 1, the upper 4 bits are available and the output data bits D7–D4 are set either low in unipolar mode or to the value of the MSB in bipolar mode (Table 5).

Table 2. Control Byte Format

D7 (MSB)	D6	D5	D4	D3	D2	D1	D0 (LSB)
PD1	PD0	ACQMOD	SGL/$\overline{DIF}$	UNI/$\overline{BIP}$	A2	A1	A0

Table 3. Channel Selection for Single-Ended Operation (SGL/$\overline{DIF}$ = 1)

A2	A1	A0	CH0	CH1	CH2	CH3	CH4*	CH5*	CH6*	CH7*	COM
0	0	0	+								-
0	0	1		+							-
0	1	0			+						-
0	1	1				+					-
1	0	0					+				-
1	0	1						+			-
1	1	0							+		-
1	1	1								+	-

**Channels CH4–CH7 apply to MAX1290 only.*

Table 4. Channel Selection for Pseudo-Differential Operation (SGL/$\overline{DIF}$ = 0)

A2	A1	A0	CH0	CH1	CH2	CH3	CH4*	CH5*	CH6*	CH7*
0	0	0	+	-						
0	0	1	-	+						
0	1	0			+	-				
0	1	1			-	+				
1	0	0					+	-		
1	0	1					-	+		
1	1	0							+	-
1	1	1							-	+

**Channels CH4–CH7 apply to MAX1290 only.*

Table 5. Data-Bus Output (8 + 4 Parallel Interface)

PIN	HBEN = 0	HBEN = 1	
D0	Bit 0 (LSB)	Bit 8	
D1	Bit 1	Bit 9	
D2	Bit 2	Bit 10	
D3	Bit 3	Bit 11 (MSB)	
		BIPOLAR ($UNI/\overline{BIP}$ = 0)	**UNIPOLAR ($UNI/\overline{BIP}$ = 1)**
D4	Bit 4	Bit 11	0
D5	Bit 5	Bit 11	0
D6	Bit 6	Bit 11	0
D7	Bit 7	Bit 11	0

Applications Information

Power-On Reset

When power is first applied, internal power-on reset circuitry activates the MAX1290/MAX1292 in external clock mode and sets $\overline{INT}$ high. After the power supplies stabilize, the internal reset time is 10µs, and no conversions should be attempted during this phase. When using the internal reference, 500µs are required for V_{REF} to stabilize.

Internal and External Reference

The MAX1290/MAX1292 can be used with an internal or external reference voltage. An external reference can be connected directly to REF or REFADJ.

An internal buffer is designed to provide +2.5V at REF for both devices. The internally trimmed +1.22V reference is buffered with a +2.05V/V gain.

Internal Reference

The full-scale range with the internal reference is +2.5V with unipolar inputs and ±1.25V with bipolar inputs. The internal reference buffer allows for small adjustments (±100mV) in the reference voltage (Figure 7).

Note: The reference buffer must be compensated with an external capacitor (4.7µF min) connected between REF and GND to reduce reference noise and switching spikes from the ADC. To further minimize reference noise, connect a 0.01µF capacitor between REFADJ and GND.

External Reference

With the MAX1290/MAX1292, an external reference can be placed at either the input (REFADJ) or the output (REF) of the internal reference-buffer amplifier.

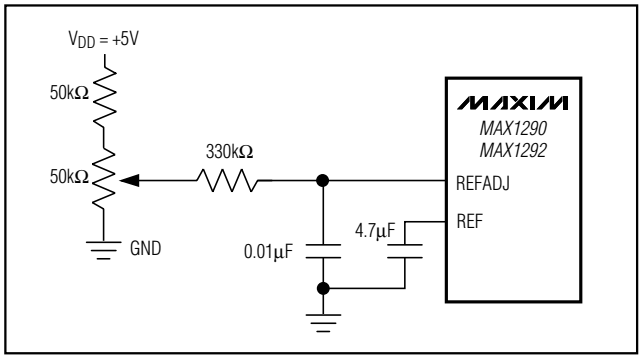

Figure 7. Reference Voltage Adjustment with External Potentiometer

Using the REFADJ input makes buffering the external reference unnecessary. The REFADJ input impedance is typically 17kΩ.

When applying an external reference to REF, disable the internal reference buffer by connecting REFADJ to V_{DD}. The DC input resistance at REF is 25kΩ. Therefore, an external reference at REF must deliver up to 200µA DC load current during a conversion and have an output impedance less than 10Ω. If the reference has higher output impedance or is noisy, bypass it close to the REF pin with a 4.7µF capacitor.

Power-Down Modes

To save power, place the converter in a low-current shutdown state between conversions. Select standby mode or shutdown mode using bits D6 and D7 of the control byte (Tables 1 and 2). In both software power-down modes, the parallel interface remains active, but the ADC does not convert.

Standby Mode

While in standby mode, the supply current is 1mA (typ). The part powers up on the next rising edge on $\overline{WR}$ and is ready to perform conversions. This quick turn-on time allows the user to realize significantly reduced power consumption for conversion rates below 400ksps.

Shutdown Mode

Shutdown mode turns off all chip functions that draw quiescent current, reducing the typical supply current to 2µA immediately after the current conversion is completed. A rising edge on $\overline{WR}$ causes the MAX1290/MAX1292 to exit shutdown mode and return to normal operation. To achieve full 12-bit accuracy with a 4.7µF reference bypass capacitor, 500µs is required after power-up. Waiting 500µs in standby mode, instead of in full-power mode, can reduce power consumption by a factor of 3 or more. When using an external reference,

400ksps, +5V, 8-/4-Channel, 12-Bit ADCs with +2.5V Reference and Parallel Interface

only 50µs is required after power-up. Enter standby mode by performing a dummy conversion with the control byte specifying standby mode.

Note: Bypass capacitors larger than 4.7µF between REF and GND result in longer power-up delays.

Transfer Function

Table 6 shows the full-scale voltage ranges for unipolar and bipolar modes.

Figure 8 depicts the nominal, unipolar input/output (I/O) transfer function, and Figure 9 shows the bipolar I/O transfer function. Code transitions occur halfway between successive-integer LSB values. Output coding is binary, with 1 LSB = (V_{REF} / 4096).

Maximum Sampling Rate/ Achieving 475ksps

When running at the maximum clock frequency of 7.6MHz, the specified 400ksps throughput is achieved by completing a conversion every 19 clock cycles: 1 write cycle, 3 acquisition cycles, 13 conversion cycles, and 2 read cycles. This assumes that the results of the last conversion are read before the next control byte is written. It's possible to achieve higher throughputs (Figure 10), up to 475ksps, by first writing a control word to begin the acquisition cycle of the next conversion, then reading the results of the previous conversion from the bus. This technique allows a conversion to be completed every 16 clock cycles. Note that switching the data bus during acquisition or conversion can cause additional supply noise that can make it difficult to achieve true 12-bit performance.

Layout, Grounding, and Bypassing

For best performance, use PC boards. Wire-wrap configurations are not recommended since the layout should ensure proper separation of analog and digital traces. Do not run analog and digital lines parallel to each other, and do not lay out digital signal paths underneath the ADC package. Use separate analog and digital PC board ground sections with only one star point (Figure 11) connecting the two ground systems (analog and digital). For lowest noise operation, ensure the ground return to the star ground's power supply is low impedance and as short as possible. Route digital signals far away from sensitive analog and reference inputs.

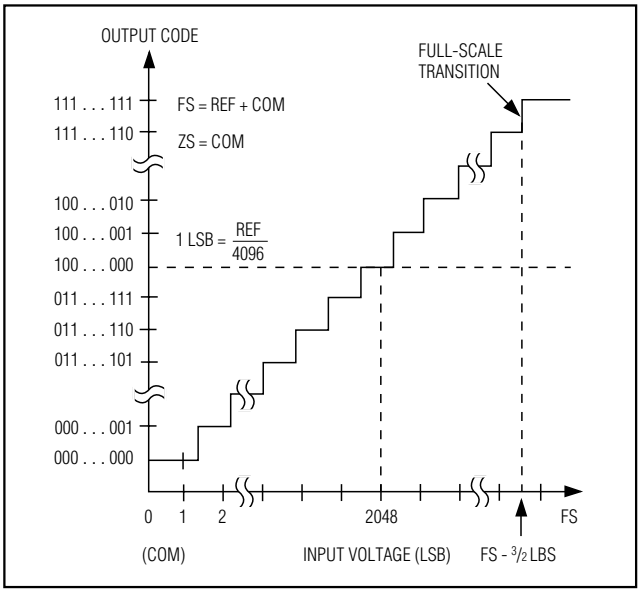

Figure 8. Unipolar Transfer Function

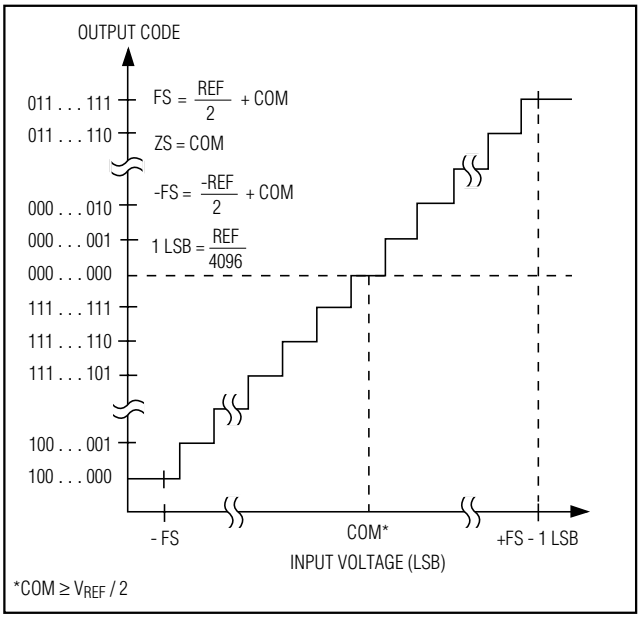

Figure 9. Bipolar Transfer Function

Table 6. Full Scale and Zero Scale for Unipolar and Bipolar Operation

UNIPOLAR MODE		BIPOLAR MODE	
Full Scale	V_{REF} + COM	Positive Full Scale	V_{REF}/2 + COM
Zero Scale	COM	Zero Scale	COM
—	—	Negative Full Scale	-V_{REF}/2 + COM

High-frequency noise in the power supply (V_{DD}) could influence the proper operation of the ADC's fast comparator. Bypass V_{DD} to the star ground with a network of two parallel capacitors, 0.1µF and 4.7µF, located as close as possible to the MAX1290/MAX1292 power-supply pin. Minimize capacitor lead length for best supply-noise rejection, and add an attenuation resistor (5Ω) if the power supply is extremely noisy.

Definitions

Integral Nonlinearity

Integral nonlinearity (INL) is the deviation of the values on an actual transfer function from a straight line. This straight line can be either a best-straight-line fit or a line drawn between the endpoints of the transfer function, once offset and gain errors have been nullified. The MAX1290/MAX1292's INL is measured using the endpoint method.

Differential Nonlinearity

Differential nonlinearity (DNL) is the difference between an actual step width and the ideal value of 1 LSB. A DNL error specification of less than 1 LSB guarantees no missing codes and a monotonic transfer function.

Aperture Jitter

Aperture jitter (t_{AJ}) is the sample-to-sample variation in the time between the samples.

Aperture Delay

Aperture delay (t_{AD}) is the time between the rising edge of the sampling clock and the instant when an actual sample is taken.

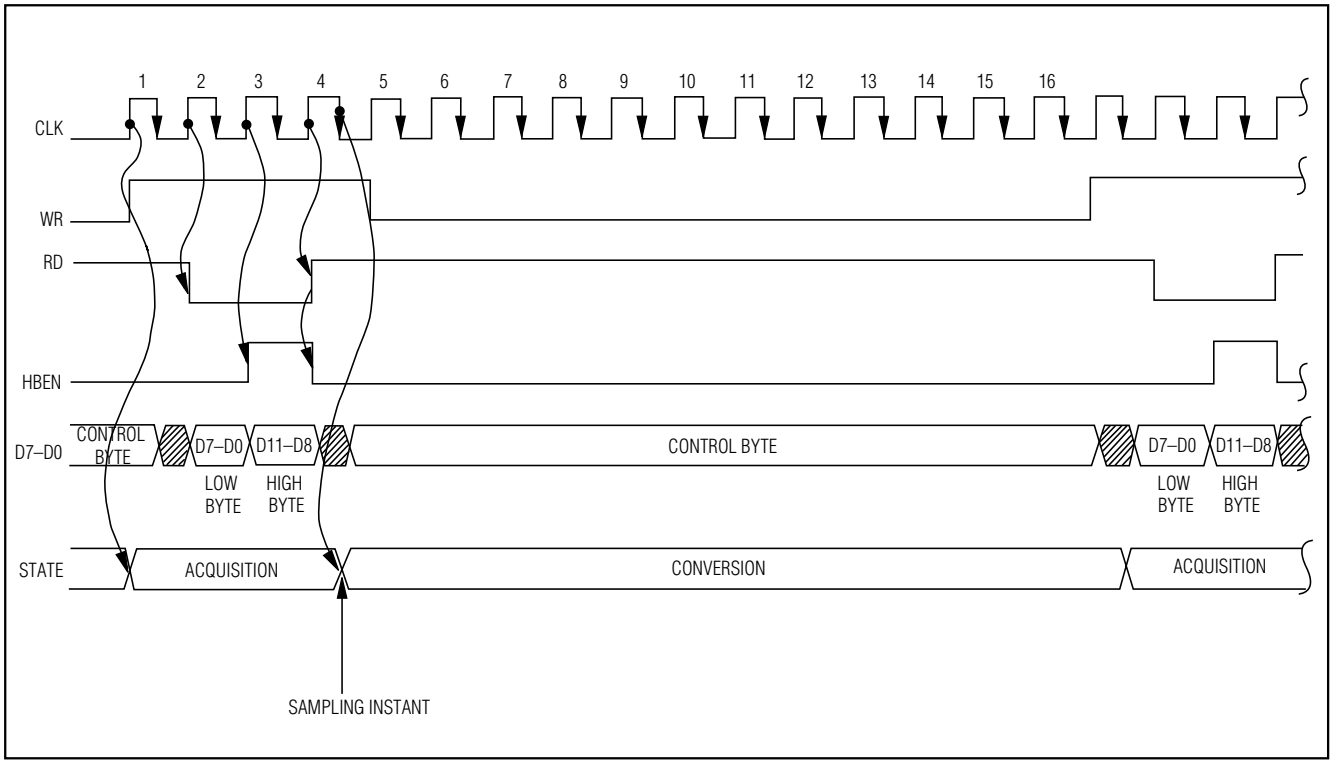

Figure 10. Timing Diagram for Fastest Conversion

400ksps, +5V, 8-/4-Channel, 12-Bit ADCs with +2.5V Reference and Parallel Interface

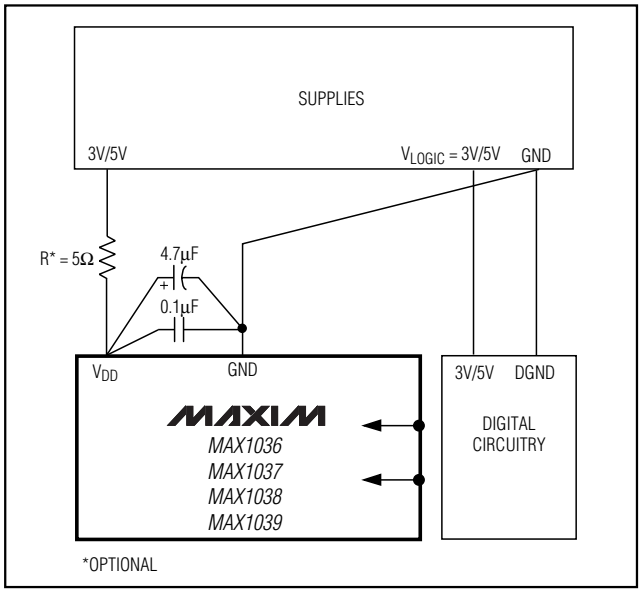

Figure 11. Power-Supply and Grounding Connections

Signal-to-Noise Ratio

For a waveform perfectly reconstructed from digital samples, signal-to-noise ratio (SNR) is the ratio of the full-scale analog input (RMS value) to the RMS quantization error (residual error). The ideal, theoretical minimum analog-to-digital noise is caused by quantization error only and results directly from the ADC's resolution (N bits):

$$SNR = (6.02 \times N + 1.76)dB$$

In reality, there are other noise sources besides quantization noise, including thermal noise, reference noise, clock jitter, etc. Therefore, SNR is computed by taking the ratio of the RMS signal to the RMS noise, which includes all spectral components minus the fundamental, the first five harmonics, and the DC offset.

Signal-to-Noise Plus Distortion

Signal-to-noise plus distortion (SINAD) is the ratio of the fundamental input frequency's RMS amplitude to the RMS equivalent of all other ADC output signals.

$$SINAD\ (dB) = 20 \times \log (Signal_{RMS} / Noise_{RMS})$$

Effective Number of Bits

Effective number of bits (ENOB) indicates the global accuracy of an ADC at a specific input frequency and sampling rate. An ideal ADC's error consists of quantization noise only. With an input range equal to the ADC's full-scale range, calculate the ENOB as follows:

$$ENOB = (SINAD - 1.76) / 6.02$$

Total Harmonic Distortion

Total harmonic distortion (THD) is the ratio of the RMS sum of the input signal's first five harmonics to the fundamental itself. This is expressed as:

$$THD = 20 \times \log \left(\sqrt{\left(V_2^2 + V_3^2 + V_4^2 + V_5^2 \right)} / V_1 \right)$$

where V_1 is the fundamental amplitude, and V_2 through V_5 are the amplitudes of the 2nd- through 5th-order harmonics.

Spurious-Free Dynamic Range

Spurious-free dynamic range (SFDR) is the ratio of the RMS amplitude of the fundamental (maximum signal component) to the RMS value of the next-largest distortion component.

Chip Information

TRANSISTOR COUNT: 5781

SUBSTRATE CONNECTED TO GND

Typical Operating Circuits

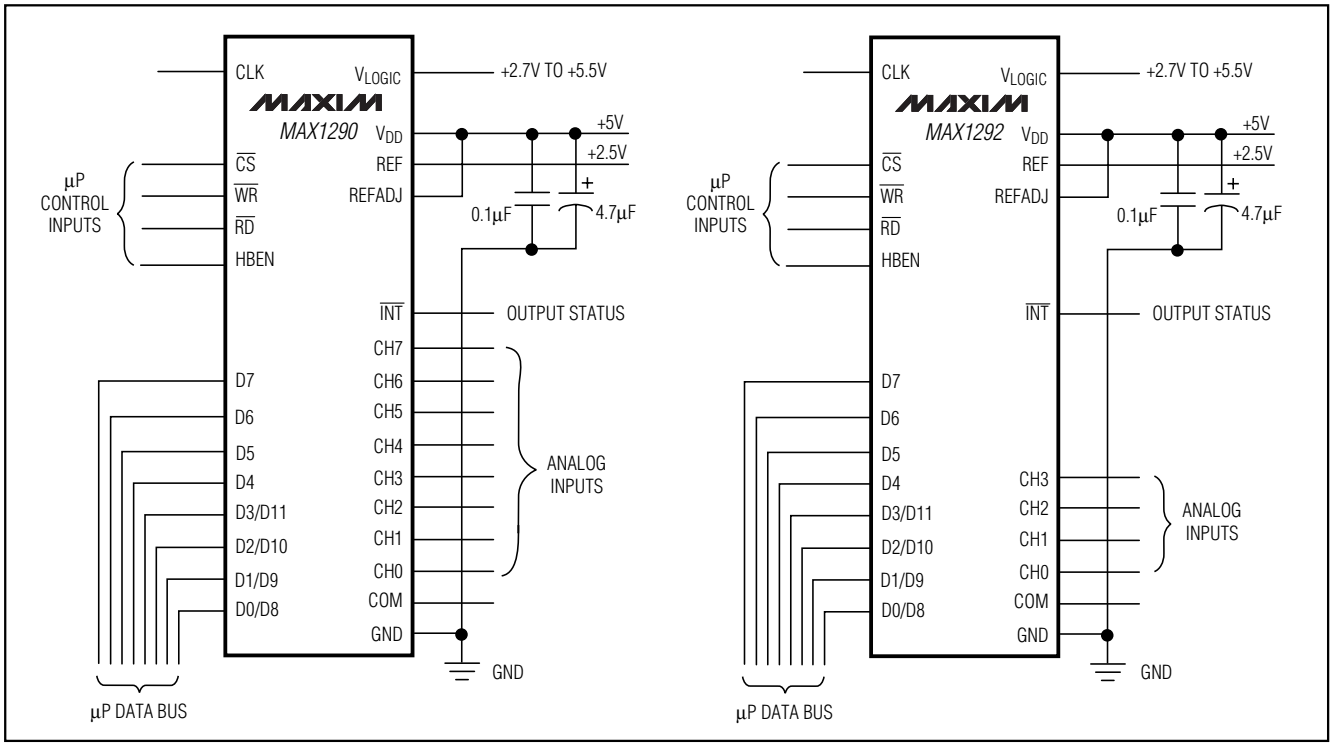

Pin Configurations (continued)

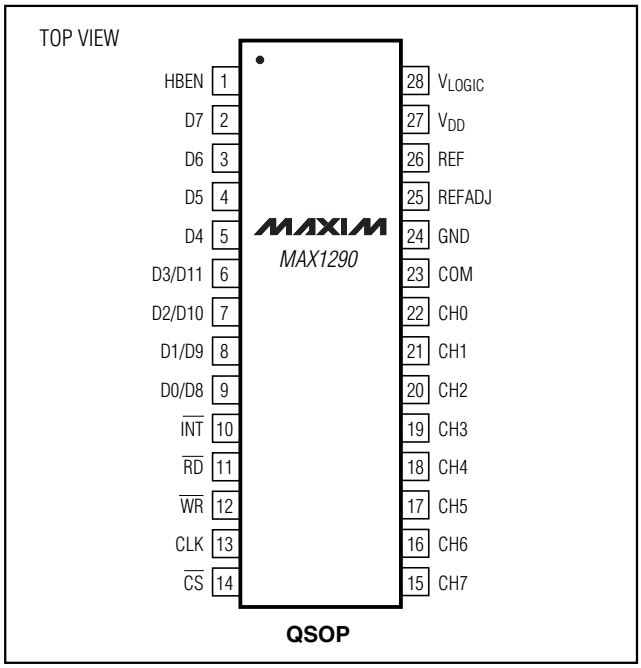

Ordering Information (continued)

PART	TEMP RANGE	PIN-PACKAGE	INL (LSB)
MAX1292ACEG	0°C to +70°C	24 QSOP	±0.5
MAX1292BCEG	0°C to +70°C	24 QSOP	±1
MAX1292AEEG	-40°C to +85°C	24 QSOP	±0.5
MAX1292BEEG	-40°C to +85°C	24 QSOP	±1

400ksps, +5V, 8-/4-Channel, 12-Bit ADCs with +2.5V Reference and Parallel Interface

Package Information

(The package drawing(s) in this data sheet may not reflect the most current specifications. For the latest package outline information go to **www.maxim-ic.com/packages**.)

QSOP.EPS

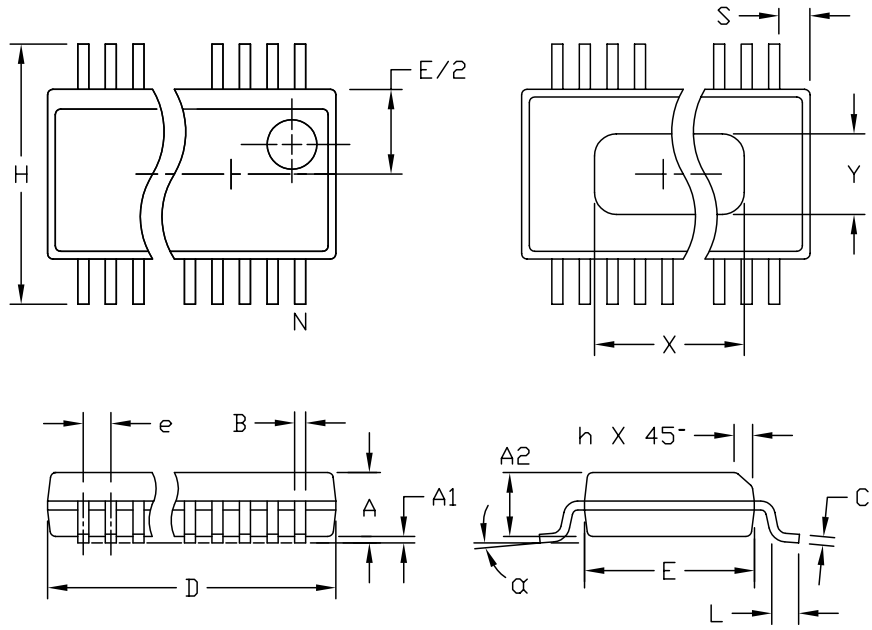

DIM	INCHES MIN	INCHES MAX	MILLIMETERS MIN	MILLIMETERS MAX
A	.061	.068	1.55	1.73
A1	.004	.0098	0.102	0.249
A2	.055	.061	1.40	1.55
B	.008	.012	0.20	0.31
C	.0075	.0098	0.191	0.249
D	SEE VARIATIONS			
E	.150	.157	3.81	3.99
e	.025 BSC		0.635 BSC	
H	.230	.244	5.84	6.20
h	.010	.016	0.25	0.41
L	.016	.035	0.41	0.89
N	SEE VARIATIONS			
X	SEE VARIATIONS			
Y	.071	.087	1.803	2.209
α	0°	8°	0°	8°

VARIATIONS:

	INCHES MIN.	INCHES MAX.	MILLIMETERS MIN.	MILLIMETERS MAX.	N	
D	.189	.196	4.80	4.98	16	AA
S	.0020	.0070	0.05	0.18		
X	.107	.123	2.72	3.12		
D	.337	.344	8.56	8.74	20	AB
S	.0500	.0550	1.270	1.397		
D	.337	.344	8.56	8.74	24	AC
S	.0250	.0300	0.635	0.762		
D	.386	.393	9.80	9.98	28	AD
S	.0250	.0300	0.635	0.762		
X	.271	.287	6.88	7.29		

NOTES:
1. D & E DO NOT INCLUDE MOLD FLASH OR PROTRUSIONS.
2. MOLD FLASH OR PROTRUSIONS NOT TO EXCEED .006" PER SIDE.
3. HEAT SLUG DIMENSIONS X AND Y APPLY ONLY TO 16 AND 28 LEAD POWER-QSOP PACKAGES.
4. CONTROLLING DIMENSIONS: INCHES.
5. MEETS JEDEC MO137.

MAXIM
PROPRIETARY INFORMATION
TITLE:
PACKAGE OUTLINE, QSOP, .150", .025" LEAD PITCH

APPROVAL	DOCUMENT CONTROL NO.	REV	
	21-0055	C	1/1

Maxim cannot assume responsibility for use of any circuitry other than circuitry entirely embodied in a Maxim product. No circuit patent licenses are implied. Maxim reserves the right to change the circuitry and specifications without notice at any time.

© 2002 Maxim Integrated Products Printed USA MAXIM is a registered trademark of Maxim Integrated Products.