Altech Corp.® by BERNSTEIN

# SiRK and Si1 Series

**SIRK**

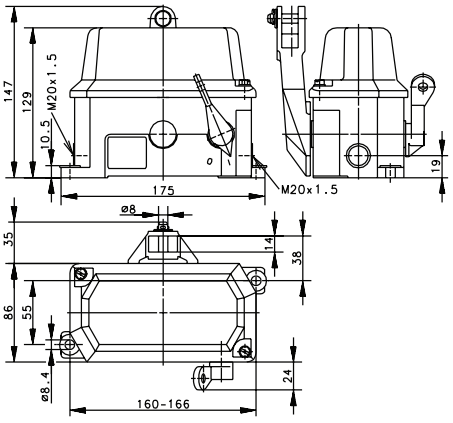


**SI1**

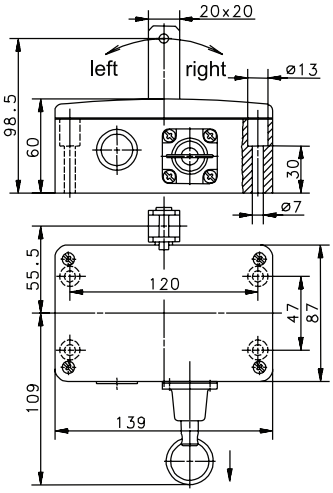


| | | SIRK | SI1 |
|---|---|---|---|
| **Variant 1** | **Article No.**<br>**Designation**<br>Max. span | **601.5625.001**<br>SIRK-U2Z R<br>2 x 75 m | **601.4735.001**<br>SI1-U2Z AK R-RAST<br>2 x 50 m |
| **Variant 2** | **Article No.**<br>**Designation**<br>Max. span | | **601.4735.025**<br>SI1-U1Z/U1Z AK R-RAST<br>2 x 50 m |
| **Variant 3** | **Article No.**<br>**Designation**<br>Max. span | | |

## Technical Information

| | SIRK | SI1 |
|---|---|---|
| Maximum Switching Voltage | 240V | 240V |
| Maximum Switching Amperage | 10A | 10A |
| B10d | 0.2 Million | 2 Million |
| Mechanical Service Life | 1 x $10^5$ | 1 x $10^5$ |
| Switching Frequency | ≤ 30/min | ≤ 10/min |
| Operating Temperature | –30 °C to +80 °C | –30 °C to +80 °C |
| Protection Rating | IP65 | IP65 |
| Utilization Category | AC 15, A 300 240 V /3 A, 120 V /6 A<br>DC 13, Q300 250 V/0.27 A, 125 V/0.55 A | AC-15, U /$I_e$ 240 V / 3 A |
| Rate Insulation Voltage | 250VAC | 250VAC |
| Approvals | C US | C US |

*Drawing dimensions in mm*



Altech Corp.® • 35 Royal Road • Flemington, NJ 08822-6000 • P (908)806-9400 • F (908)806-9490 • www.altechcorp.com