Evolution Dual Series

- 25A & 50A Output rating per channel @ 40°C
- 24 to 280 & 48 to 600VAC Operating voltage
- 4-32VDC Control input
- Three input termination options
- Zero turn-on outputs
- Input status LED indicator for each channel
- Available with IP20 "Touch-Safe" Covers
- UL508 Endurance Rating

PRODUCT SELECTION

Control Voltage	240V, 25A	240V, 50A	480V, 25A	480V, 50A
4-32 VDC	CD2425W2U	CD2450W2U	CD4825W2U	CD4850W2U

AVAILABLE OPTIONS

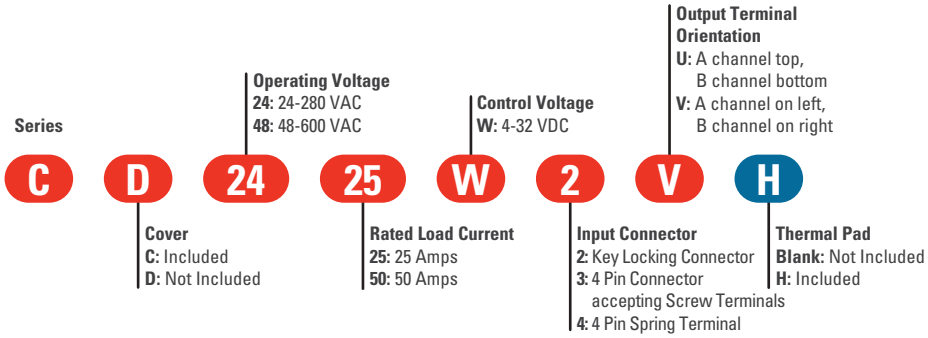

Required for valid part number
For options only and not required for valid part number
* Not all part number combinations are available. Contact Crydom Technical support for information on the availability of a specific part number.

OUTPUT SPECIFICATIONS (1)

Description	Cx2425xxxx	Cx2450xxxx	Cx4825xxxx	Cx4850xxxx
Operating Voltage (47-440Hz) [Vrms]	24-280	24-280	48-600	48-600
Load Current Range (3) [Arms]	0.15-25	0.15-50	0.15-25	0.15-50
Transient Overvoltage [Vpk]	600	600	1200	1200
Maximum Off-State Leakage Current @ Rated Voltage [mArms]	1.0	1.0	1.0	1.0
Minimum Off-State dv/dt @ Maximum Rated Voltage [V/µsec] (2)	500	500	500	500
Maximum 1 Cycle Surge Current (50/60) [Apk]	275/300	710/750	275/300	710/750
Maximum Surge Current 50Hz (20ms) [Apk]	275	710	275	710
Maximum On-State Voltage Drop @ Rated Current [Vpk]	1.3	1.3	1.3	1.3
Thermal Resistance Junction to Case (Rjc) [°C/W]	0.65	0.33	0.65	0.33
Maximum I^2t for Fusing 50/60Hz (1/2 cycle) [A^2 sec]	380/370	2520/2320	380/370	2520/2320
Minimum Power Factor (with Maximum Load)	0.5	0.5	0.5	0.5

Copyright © 2016 Crydom Inc. Specifications subject to change without notice.

INPUT SPECIFICATIONS (1)

Description	CxxxWxxx
Control Voltage Range	4-32 VDC
Minimum Turn-On Voltage	4 VDC
Minimum Turn-Off Voltage	1 .0 VDC
Typical Input Current	10 mA @ 12 VDC
Nominal Input Impedance	See Note (4)
Maximum Turn-On Time [msec]	1/2 Cycle
Maximum Turn-Off Time [msec]	1/2 Cycle

GENERAL SPECIFICATIONS

Description	Parameters
Dielectric Strength, Input/Output (50/60Hz)	4000 Vrms
Dielectric Strength, Input/Output/Base (50/60Hz)	4000 Vrms
Minimum Insulation Resistance (@ 500 V DC)	10^9 Ohm
Maximum Capacitance, Input/Output	10 pF
Ambient Operating Temperature Range	-40 to 80 °C
Ambient Storage Temperature Range	-40 to 125 °C
Weight (typical)	3.0 oz (86.5 g)
Terminals	Screw Type Output: 8-32
Max. Torque	Output: 20 in lb (2.2Nm)
Max. Wire Size	Output:2 x AWG 8 (3.8mm)

GENERAL NOTES

1) All parameters at 25°C and per section unless otherwise specified.
2) Off-state dv/dt test method per EIA/NARM standard RS-443, paragraph 13.11.1
3) Heat sinking required, see derating curves.
4) Input circuit incorporates active current limitation

WIRING DIAGRAM

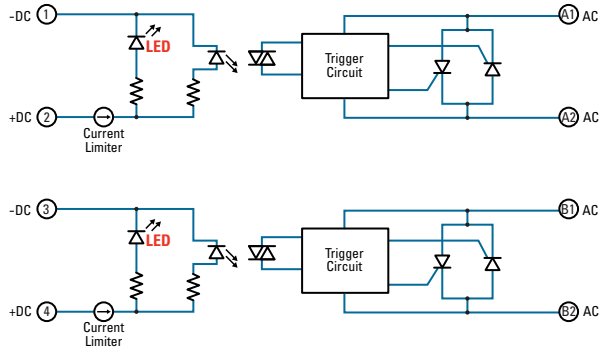

SSR Output Configuration
"U" Option Top-Bottom
Line/Load Connections

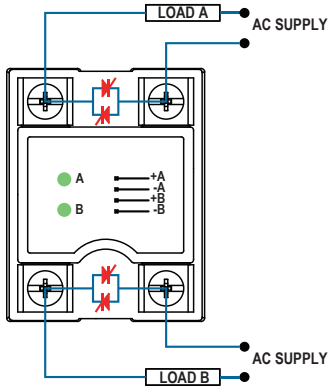

Contactor Output Configuration
"V" Option Left-Right
Line/Load Connections

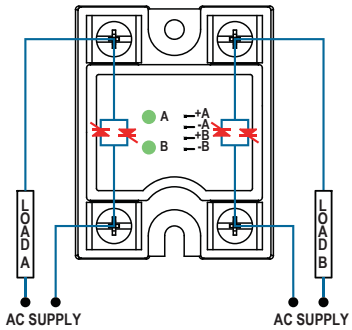

Copyright © 2016 Crydom Inc. Specifications subject to change without notice.

MECHANICAL SPECIFICATIONS

Tolerances: ± 0.02 in / 0.5 m
All dimensions are in: inches [millimeters]

IP20

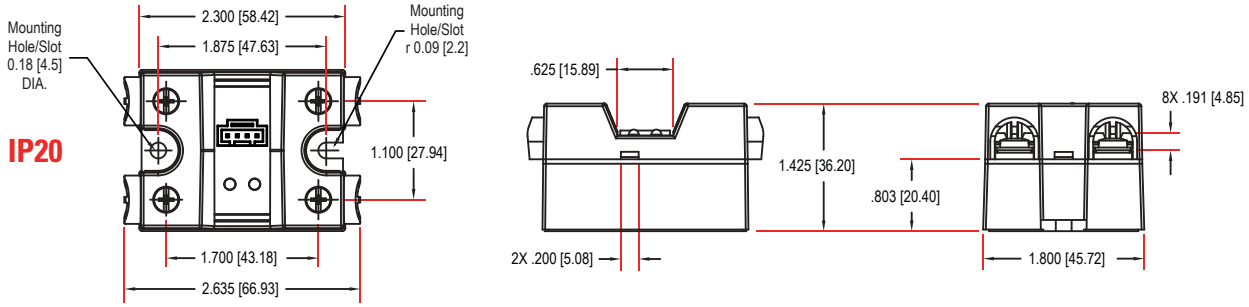

IP00

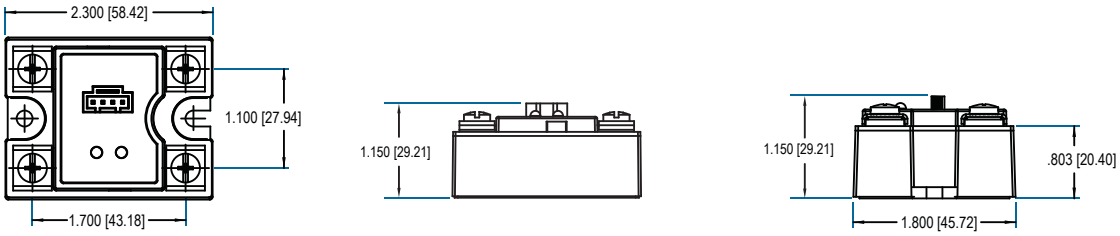

MECHANICAL DIMENSIONS (shown without IP20 cover)	INPUT CONNECTOR DIMENSIONS	SUGGESTED MATING CONNECTORS/PLUGS
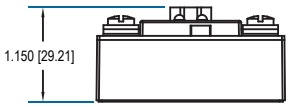 INPUT CONNECTOR **OPTION 2**	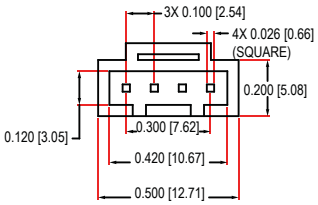	**Crimp Housing, Positive Latch** Molex 050579404 Accepts wires: AWG #24, 0.2 mm²
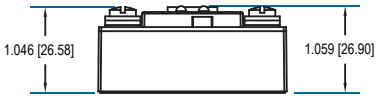 INPUT CONNECTOR **OPTION 3**	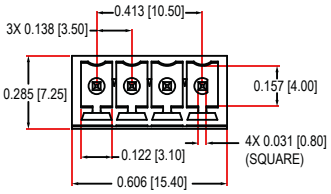	**Vertical Plug, Top Wire entry** Molex 039500-0004 Phoenix 1840382 Dinkle EC350V-04P **Vertical Plug, Rear Wire entry** Molex 39503-2004 Phoenix 1862878 Dinkle EC350RL-04P **Vertical Plug, Front Wire entry** Molex 39503-3004 Phoenix 1863178 Dinkle EC350R-04P **Vertical Spring Cage Plug, top Wire E** Phoenix 1939934 Dinkle 0221-2004 All 4 options accept wires: AWG #16 to 24
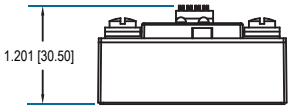 INPUT CONNECTOR **OPTION 4**	**N/A**	Accepts wires: AWG #16 to 24

Copyright © 2016 Crydom Inc. Specifications subject to change without notice.

THERMAL DERATE INFORMATION

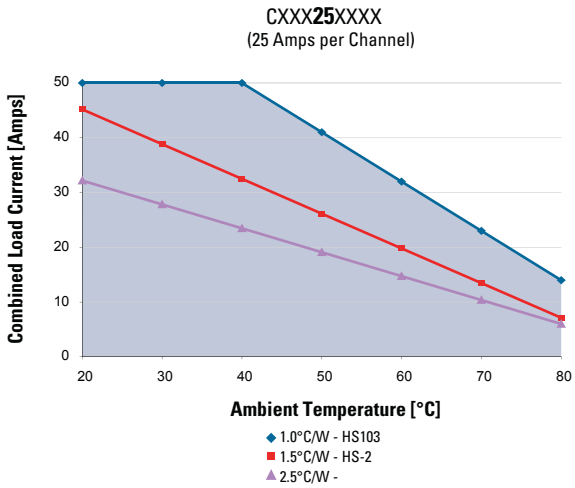

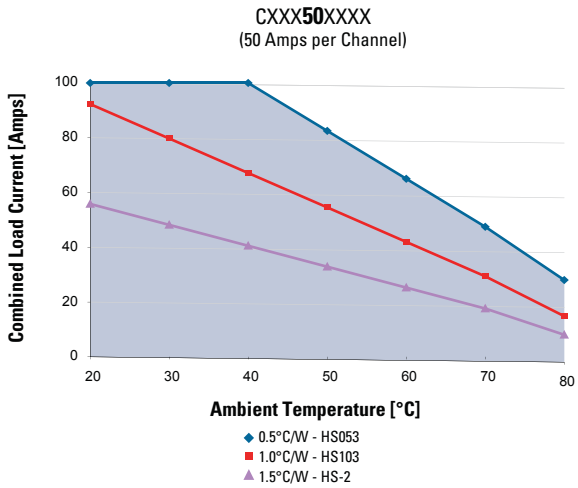

AGENCY APPROVALS

Approvals
Designed in accordance with the requirements of IEC 62314
c UL us E116950 TÜV CE RoHS

Rev. 060916

Copyright © 2016 Crydom Inc. Specifications subject to change without notice.

⚠ DANGER / PELIGRO / DANGER /GEFAHR / PERICOLO / 危险

HAZARD OF ELECTRIC SHOCK, EXPLOSION, OR ARC FLASH.

- Disconnect all power before installing or working with this equipment.
- Verify all connections and replace all covers before turning on power.

Failure to follow these instructions will result in death or serious injury.

RIESGO DE DESCARGA ELECTRICA O EXPLOSION.

- Desconectar todos los suministros de energia a este equipo antes de trabajar con este equipo.
- Verificar todas las conexiones y colocar todas las tapas antes de energizer el equipo.

El incumplimiento de estas instrucciones puede provocar la muerte o lesiones serias.

RISQUE DE DESCHARGE ELECTRIQUE OU EXPLOSION

- Eteindre toutes les sources d'énergie de cet appareil avant de travailler dessus de cet appareil
- Vérifier tous connections, et remettre tous couverts en olace avant de mettre sous

De non-suivi de ces instructions provoquera la mort ou des lésions sérieuses sérieuses.

GEFAHR EINES ELEKTRISCHE N SCHLAGES ODER EINER EXPLOSION.

- Stellen Sie jeglichen Strom ab, der dieses Gerät versorgt, bevor Sie an dem Gerät Arbeiten durchführen
- Vor dem Drehen auf Energie alle Anschlüsse überprüfen und alle Abdeckungen ersetzen.

Unterlassung dieser Anweisungen können zum Tode oder zu schweren Verletzungen führen.

RISCHIO DI SCOSSA ELETTRICA O DELL'ESPLOSI ONE.

- Spenga tutta l'alimentazion e che fornisce questa apparecchiatu ra prima del lavorare a questa apparecchiatu ra
- Verificare tutti i collegamenti e sostituire tutte le coperture prima della rotazione sull'alimentazi one

L'omissione di seguire queste istruz ioni provocherà la morte o di lesioni serie

存在电击、爆炸或电弧闪烁危险

- 在操作此设备之前请先关闭电源。

若不遵守这些说明，可能会导致严重的人身伤害甚至死亡。

⚠ WARNING / AVERTISSEMENT / WARNUNG /ADVERTENCIA / AVVERTENZA / 警告

RISK OF MATERIAL DAMAGE AND HOT ENCLOSURE

- The product's side panels may be hot, allow the product to cool before touching.
- Follow proper mounting instructions including torque values.
- Do not allow liquids or foreign objects to enter this product.

Failure to follow these instructions can result in serious injury, or equipment damage.

RISQUE DE DOMMAGE MATERIEL ET DE SURCHAUFFE DU BOITIER

- Les panneaux latéraux du produit peuvent être chauds. Laisser le produit refroidir avant de le toucher.
- Respecter les consignes de montage, et notamment les couples de serrage.
- Ne pas laisser pénétrer de liquide ni de corps étrangers à l'intérieur du produit.

Le non-respect de cette directive peut entraîner, des lésions corporelles graves ou des dommages matériels.

GEFAHR VON MATERIALSCHÄDEN UND GEHÄUSEERHITZUNG

- Die Seitenwände können heiß sein. Lassen Sie das Produkt abkühlen, bevor Sie es berühren.
- Beachten Sie die Montageanweisungen,
- Führen Sie keine Flüssigkeiten oder Fremdkörper in das Produkt ein.

Die Nichtbeachtung dieser Anweisung kann Körperverletzung oder Materialschäden zur Folge haben.

RIESGO DE DAÑOS MATERIALES Y DE SOBRECALENTAMIENTO DE LA UNIDAD

- Los paneles laterales del producto pueden estar calientes. Esperar que el producto se enfríe antes de tocarlo.
- Respetar las instrucciones de montaje, y en particular los pares de apretado.
- No dejar que penetren líquidos o cuerpos extraños en el producto.

Si no se respetan estas precauciones pueden producirse graves lesiones, daños materiales.

RISCHIO DI DANNI MATERIALI E D'INVOLUCRO CALDO

- I pannelli laterali dell'apparecchio possono scottare; lasciar quindi raffreddare il prodotto prima di toccarlo.
- Seguire le istruzioni di montaggio corrette.
- Non far entrare liquidi o oggetti estranei in questo apparecchio.

La mancata osservanza di questa precauzione può causare gravi rischi per l'incolumità personale o danni alle apparecchiature.

材料损坏和高温外壳的危险性

- 产品的一侧面板可能很热，在其冷却前请不要触碰。
- 遵照正确的安装说明，包括扭矩值。
- 请勿让液体及其他异物进入本产品。

如不能正确执行这些操作说明，极有可能造成严重人体伤害或者设备的损坏。

Copyright © 2016 Crydom Inc. Specifications subject to change without notice.

ANNEX - ENVIROMENTAL INFORMATION

The environmental information disclosed in this annex including the EIP Pollution logo are in compliance with People's Republic of China Electronic Industry Standard SJ/T11364 – 2006, Marking for Control of Pollution Caused by Electronic Information Products.

Part Name	Toxic or hazardous Substance and Elements					
	Lead (Pb)	Mercury (Hg)	Cadmium (Cd)	Hexavalent Chromium (Cr (VI))	Polybrominated biphenyls (PBB)	Polybrominated diphenyl ethers (PBDE)
Semiconductor die	X	O	O	O	O	O
Solder	X	O	O	O	O	O

附件 - 环保信息

此附件所标示的包括电子信息产品污染图标的环保信息符合中华人民共和国电子行业标准 SJ/T11364 - 2006, 电子信息产品污染控制标识要求。

部件名称	有毒有害物质或元素					
	铅 (Pb)	汞 (Hg)	镉 (Cd)	六价铬 (Cr (VI))	多溴联苯 (PBB)	多溴二苯醚 (PBDE)
半导体芯片	X	O	O	O	O	O
焊接点	X	O	O	O	O	O

Copyright © 2016 Crydom Inc. Specifications subject to change without notice.