FAST CMOS OCTAL BUFFER/LINE DRIVER

IDT54/74FCT240AT/CT

FEATURES:

- **A and C grades**
- **Low input and output leakage ≤1μA (max.)**
- **CMOS power levels**
- **True TTL input and output compatibility:**
  - *V_{OH} = 3.3V (typ.)*
  - *V_{OL} = 0.3V (typ.)*
- **High Drive outputs (-15mA I_{OH}, 64mA I_{OL})**
- **Meets or exceeds JEDEC standard 18 specifications**
- **Military product compliant to MIL-STD-883, Class B and DESC listed (dual marked)**
- **Power off disable outputs permit "live insertion"**
- **Available in the following packages:**
  - *Industrial: SOIC, SSOP, QSOP*
  - *Military: CERDIP, LCC*

DESCRIPTION:

The IDT octal buffer/line driver is built using an advanced dual metal CMOS technology. The FCT240T is designed to be employed as a memory and address driver, clock driver, and bus-oriented transmitter/ receiver which provides improved board density.

FUNCTIONAL BLOCK DIAGRAM

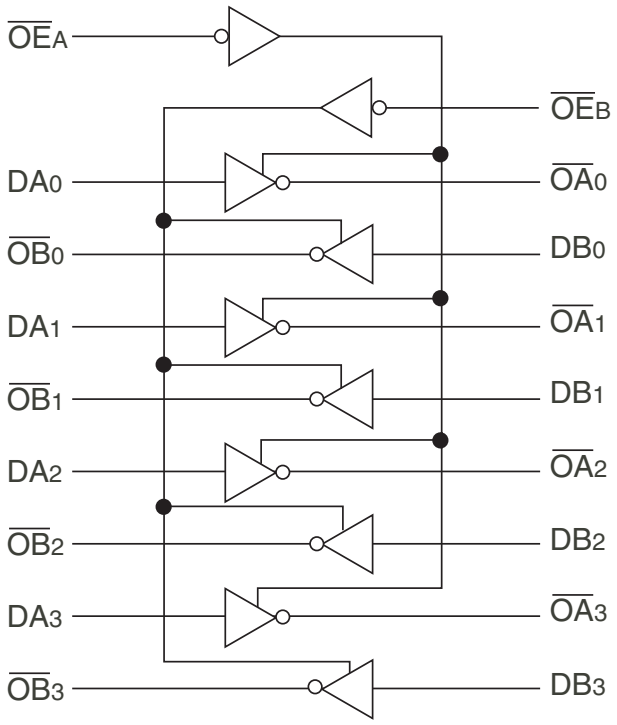

The IDT logo is a registered trademark of Integrated Device Technology, Inc.

© 2009 Integrated Device Technology, Inc.

PIN CONFIGURATION

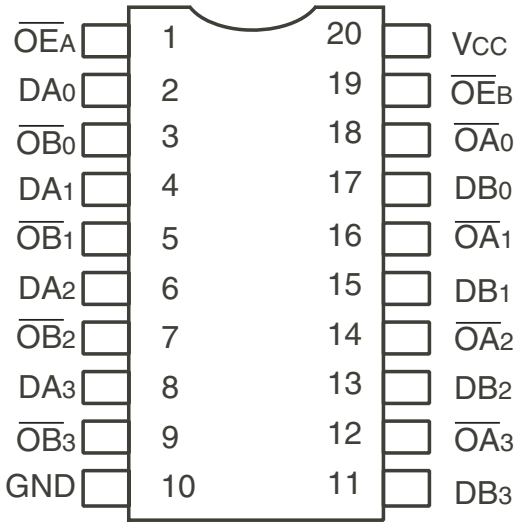

CERDIP/ SOIC/ SSOP/ QSOP
TOP VIEW

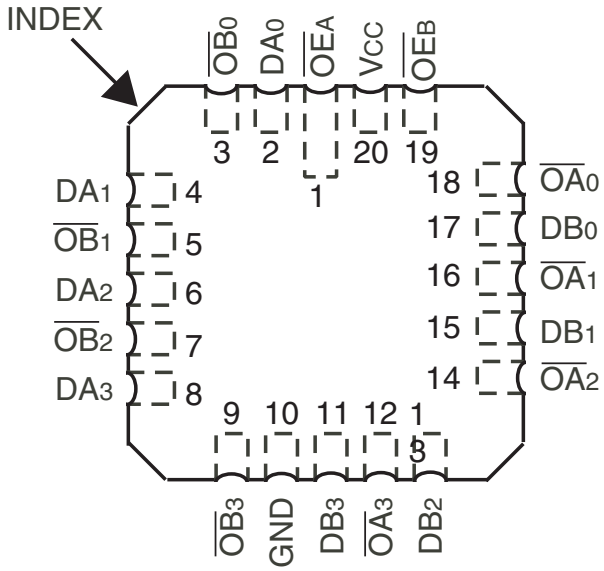

LCC
TOP VIEW

ABSOLUTE MAXIMUM RATINGS(1)

Symbol	Description	Max	Unit
V_{TERM}(2)	Terminal Voltage with Respect to GND	–0.5 to +7	V
V_{TERM}(3)	Terminal Voltage with Respect to GND	–0.5 to V_{CC}+0.5	V
T_{STG}	Storage Temperature	–65 to +150	° C
I_{OUT}	DC Output Current	–60 to +120	mA

NOTES:
1. Stresses greater than those listed under ABSOLUTE MAXIMUM RATINGS may cause permanent damage to the device. This is a stress rating only and functional operation of the device at these or any other conditions above those indicated in the operational sections of this specification is not implied. Exposure to absolute maximum rating conditions for extended periods may affect reliability. No terminal voltage may exceed Vcc by +0.5V unless otherwise noted.
2. Inputs and Vcc terminals only.
3. Output and I/O terminals only.

CAPACITANCE (T_A = +25°C, F = 1.0MHz)

Symbol	Parameter(1)	Conditions	Typ.	Max.	Unit
C_{IN}	Input Capacitance	V_{IN} = 0V	6	10	pF
C_{OUT}	Output Capacitance	V_{OUT} = 0V	8	12	pF

NOTE:
1. This parameter is measured at characterization but not tested.

PIN DESCRIPTION

Pin Names	Description
$\overline{OE}_A$, $\overline{OE}_B$	3-State Output Enable Inputs (Active LOW)
Dxx	Inputs
$\overline{O}$xx	Outputs

FUNCTION TABLE(1)

Inputs			Outputs
$\overline{OE}_A$	$\overline{OE}_B$	D	
L	L	L	H
L	L	H	L
H	H	X	Z

NOTE:
1. H = HIGH Voltage Level
   X = Don't Care
   L = LOW Voltage Level
   Z = High Impedance

DC ELECTRICAL CHARACTERISTICS OVER OPERATING RANGE

Following Conditions Apply Unless Otherwise Specified:
Industrial: T_A = –40°C to +85°C, V_{CC} = 5.0V ±5%; Military: T_A = –55°C to +125°C, V_{CC} = 5.0V ±10%

Symbol	Parameter	Test Conditions[1]		Min.	Typ.[2]	Max.	Unit
V_{IH}	Input HIGH Level	Guaranteed Logic HIGH Level		2	—	—	V
V_{IL}	Input LOW Level	Guaranteed Logic LOW Level		—	—	0.8	V
I_{IH}	Input HIGH Current[4]	V_{CC} = Max.	V_I = 2.7V	—	—	±1	µA
I_{IL}	Input LOW Current[4]	V_{CC} = Max.	V_I = 0.5V	—	—	±1	µA
I_{OZH}	High Impedance Output Current	V_{CC} = Max	V_O = 2.7V	—	—	±1	µA
I_{OZL}	(3-State output pins)[4]		V_O = 0.5V	—	—	±1	
I_I	Input HIGH Current[4]	V_{CC} = Max., V_I = V_{CC} (Max.)		—	—	±1	µA
V_{IK}	Clamp Diode Voltage	V_{CC} = Min, I_{IN} = -18mA		—	–0.7	–1.2	V
V_H	Input Hysteresis	—		—	200	—	mV
I_{CC}	Quiescent Power Supply Current	V_{CC} = Max., V_{IN} = GND or V_{CC}		—	0.01	1	mA

OUTPUT DRIVE CHARACTERISTICS

Symbol	Parameter	Test Conditions[1]		Min.	Typ.[2]	Max.	Unit
V_{OH}	Output HIGH Voltage	V_{CC} = Min V_{IN} = V_{IH} or V_{IL}	I_{OH} = –6mA MIL I_{OH} = –8mA IND	2.4	3.3	—	V
			I_{OH} = –12mA MIL I_{OH} = –15mA IND	2	3	—	
V_{OL}	Output LOW Voltage	V_{CC} = Min V_{IN} = V_{IH} or V_{IL}	I_{OL} = 48mA MIL I_{OL} = 64mA IND	—	0.3	0.55	V
I_{OS}	Short Circuit Current	V_{CC} = Max., V_O = GND[3]		–60	–120	–225	mA

NOTES:
1. For conditions shown as Min. or Max., use appropriate value specified under Electrical Characteristics for the applicable device type.
2. Typical values are at V_{CC} = 5.0V, +25°C ambient.
3. Not more than one output should be tested at one time. Duration of the test should not exceed one second.
4. The test limit for this parameter is ±5µA at T_A = –55°C.

POWER SUPPLY CHARACTERISTICS

Symbol	Parameter	Test Conditions[1]		Min.	Typ.[2]	Max.	Unit
ΔI_{CC}	Quiescent Power Supply Current TTL Inputs HIGH	V_{CC} = Max. V_{IN} = 3.4V[3]		—	0.5	2	mA
I_{CCD}	Dynamic Power Supply Current[4]	V_{CC} = Max. Outputs Open $\overline{OE}_A = \overline{OE}_B$ = GND One Input Toggling 50% Duty Cycle	$V_{IN} = V_{CC}$ V_{IN} = GND	—	0.15	0.25	mA/ MHz
I_C	Total Power Supply Current[6]	V_{CC} = Max. Outputs Open fi = 10MHz 50% Duty Cycle $\overline{OE}_A = \overline{OE}_B$ = GND One Bit Toggling	$V_{IN} = V_{CC}$ V_{IN} = GND	—	1.5	3.5	mA
			V_{IN} = 3.4V V_{IN} = GND	—	1.8	4.5	
		V_{CC} = Max. Outputs Open fi = 2.5MHz 50% Duty Cycle $\overline{OE}_A = \overline{OE}_B$ = GND Eight Bits Toggling	$V_{IN} = V_{CC}$ V_{IN} = GND	—	3	6[5]	
			V_{IN} = 3.4V V_{IN} = GND	—	5	14[5]	

NOTES:
1. For conditions shown as Min. or Max., use appropriate value specified under Electrical Characteristics for the applicable device type.
2. Typical values are at V_{CC} = 5.0V, +25°C ambient.
3. Per TTL driven input; (V_{IN} = 3.4V). All other inputs at V_{CC} or GND.
4. This parameter is not directly testable, but is derived for use in Total Power Supply Calculations.
5. Values for these conditions are examples of ΔI_{CC} formula. These limits are guaranteed but not tested.
6. $I_C = I_{QUIESCENT} + I_{INPUTS} + I_{DYNAMIC}$
   $I_C = I_{CC} + \Delta I_{CC} D_H N_T + I_{CCD} (f_{CP}/2 + f_i N_i)$
   I_{CC} = Quiescent Current
   ΔI_{CC} = Power Supply Current for a TTL High Input (V_{IN} = 3.4V)
   D_H = Duty Cycle for TTL Inputs High
   N_T = Number of TTL Inputs at D_H
   I_{CCD} = Dynamic Current caused by an Input Transition Pair (HLH or LHL)
   f_{CP} = Clock Frequency for Register Devices (Zero for Non-Register Devices)
   f_i = Output Frequency
   N_i = Number of Outputs at f_i

All currents are in milliamps and all frequencies are in megahertz.

SWITCHING CHARACTERISTICS OVER OPERATING RANGE

Symbol	Parameter	Condition[1]	FCT240AT				FCT240CT				Unit
			Ind.		Mil.		Ind.		Mil.		
			Min.[2]	Max.	Min.[2]	Max.	Min.[2]	Max.	Min.[2]	Max.	
t_{PLH} t_{PHL}	Propagation Delay Dx to $\overline{O}$x	C_L = 50pF R_L = 500Ω	1.5	4.8	1.5	5.1	1.5	4.3	1.5	4.7	ns
t_{PZH} t_{PZL}	Output Enable Time		1.5	6.2	1.5	6.5	1.5	5.8	1.5	6.5	ns
t_{PHZ} t_{PLZ}	Output Disable Time		1.5	5.6	1.5	5.9	1.5	5.2	1.5	5.7	ns

NOTES:
1. See test circuit and waveforms.
2. Minimum limits are guaranteed but not tested on Propagation Delays.

TEST CIRCUITS AND WAVEFORMS

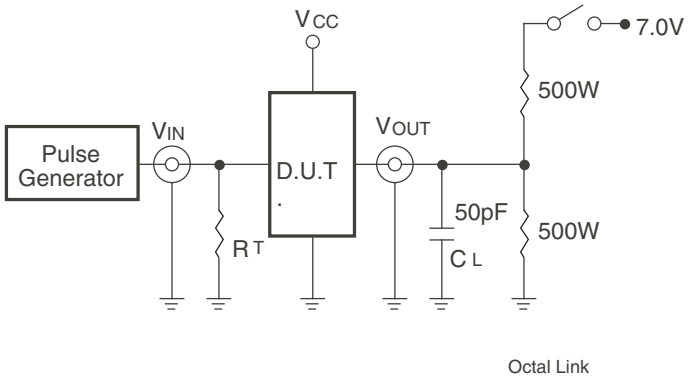

Test Circuits for All Outputs

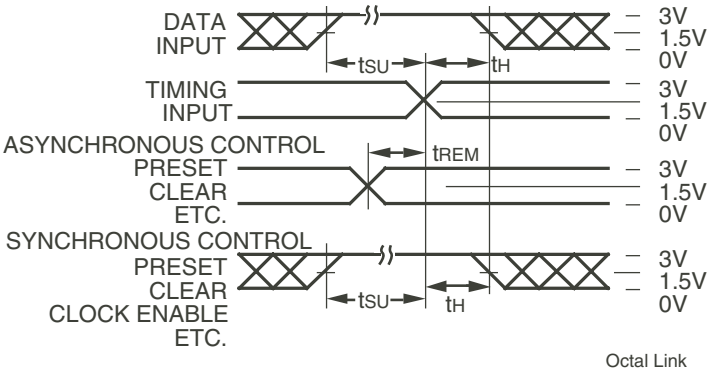

Set-Up, Hold, and Release Times

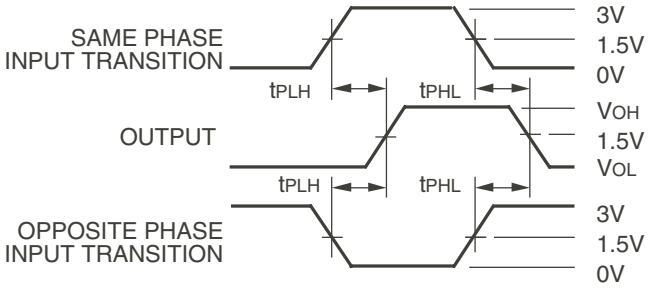

Propagation Delay

SWITCH POSITION

Test	Switch
Open Drain Disable Low Enable Low	Closed
All Other Tests	Open

DEFINITIONS:

C_L = Load capacitance: includes jig and probe capacitance.

R_T = Termination resistance: should be equal to Z_{OUT} of the Pulse Generator.

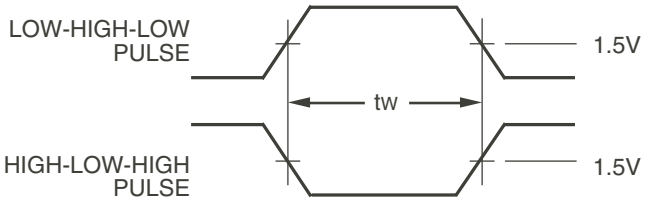

Pulse Width

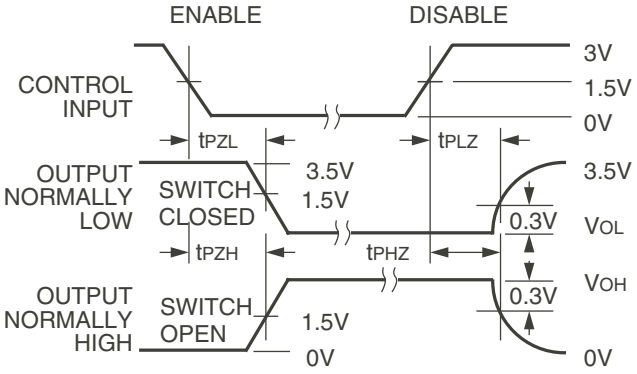

Enable and Disable Times

NOTES:

1. Diagram shown for input Control Enable-LOW and input Control Disable-HIGH.
2. Pulse Generator for All Pulses: Rate ≤ 1.0MHz; t_F ≤ 2.5ns; t_R ≤ 2.5ns.

ORDERING INFORMATION

XX FCT XXXX XX X

Temp. Range | Device Type | Package | Process

Process:
- Blank — Industrial
- B — MIL-STD-883, Class B

Package:

Industrial Options
- SOG — Small Outline IC - Green
- PYG — Shrink Small Outline Package - Green
- QG — Quarter-size Small Outline Package - Green

Military Options
- D — CERDIP
- L — Leadless Chip Carrier

Device Type:
- 240AT — Fast CMOS Octal Buffer/Line Driver
- 240CT

Temp. Range:
- 54 — – 55°C to +125°C
- 74 — – 40°C to +85°C

Datasheet Document History

09/29/09 Pg. 6 Updated the ordering information by removing the "IDT" notation and non RoHS part.

CORPORATE HEADQUARTERS
6024 Silver Creek Valley Road
San Jose, CA 95138

for SALES:
800-345-7015 or 408-284-8200
fax: 408-284-2775
www.idt.com

for Tech Support:
logichelp@idt.com