165-Bump BGA
Commercial Temp
Industrial Temp

288Mb SigmaDDR-II+™ Burst of 2 SRAM

550 MHz–400 MHz
1.8 V V_{DD}
1.8 V or 1.5 V I/O

Features

- 2.5 Clock Latency
- Simultaneous Read and Write SigmaDDR™ Interface
- JEDEC-standard pinout and package
- Double Data Rate interface
- Byte Write controls sampled at data-in time
- Burst of 2 Read and Write
- Dual-Range On-Die Termination (ODT) on Data (D), Byte Write ($\overline{BW}$), and Clock (K, $\overline{K}$) inputs
- 1.8 V +100/–100 mV core power supply
- 1.5 V or 1.8 V HSTL Interface
- Pipelined read operation
- Fully coherent read and write pipelines
- ZQ pin for programmable output drive strength
- Data Valid Pin (QVLD) Support
- IEEE 1149.1 JTAG-compliant Boundary Scan
- RoHS-compliant 165-bump BGA package

SigmaDDR-II™ Family Overview

The GS82582TT20/38GE are built in compliance with the SigmaDDR-II+ SRAM pinout standard for Common I/O synchronous SRAMs. They are 301,989,888-bit (288Mb) SRAMs. The GS82582TT20/38GE SigmaDDR-II+ SRAMs are just one element in a family of low power, low voltage HSTL I/O SRAMs designed to operate at the speeds needed to implement economical high performance networking systems.

Clocking and Addressing Schemes

The GS82582TT20/38GE SigmaDDR-II+ SRAMs are synchronous devices. They employ two input register clock inputs, K and $\overline{K}$. K and $\overline{K}$ are independent single-ended clock inputs, not differential inputs to a single differential clock input buffer.

Each internal read and write operation in a SigmaDDR-II+ B2 RAM is two times wider than the device I/O bus. An input data bus de-multiplexer is used to accumulate incoming data before it is simultaneously written to the memory array. An output data multiplexer is used to capture the data produced from a single memory array read and then route it to the appropriate output drivers as needed. Therefore, the address field of a SigmaDDR-II+ B2 RAM is always one address pin less than the advertised index depth (e.g., the 16M x 18 has an 8M addressable index).

Parameter Synopsis

	-550	-500	-450	-400
tKHKH	1.81 ns	2.0 ns	2.2 ns	2.5 ns
tKHQV	0.45 ns	0.45 ns	0.45 ns	0.45 ns

 © 2012, GSI Technology

Specifications cited are subject to change without notice. For latest documentation see http://www.gsitechnology.com.

8M x 36 SigmaDDR-II+ SRAM—Top View

	1	2	3	4	5	6	7	8	9	10	11
A	$\overline{CQ}$	SA	SA	R/$\overline{W}$	$\overline{BW2}$	$\overline{K}$	$\overline{BW1}$	$\overline{LD}$	SA	SA	CQ
B	NC	DQ27	DQ18	SA	$\overline{BW3}$	K	$\overline{BW0}$	SA	SA	NC	DQ8
C	NC	NC	DQ28	V_{SS}	SA	NC	SA	V_{SS}	NC	DQ17	DQ7
D	NC	DQ29	DQ19	V_{SS}	V_{SS}	V_{SS}	V_{SS}	V_{SS}	NC	NC	DQ16
E	NC	NC	DQ20	V_{DDQ}	V_{SS}	V_{SS}	V_{SS}	V_{DDQ}	NC	DQ15	DQ6
F	NC	DQ30	DQ21	V_{DDQ}	V_{DD}	V_{SS}	V_{DD}	V_{DDQ}	NC	NC	DQ5
G	NC	DQ31	DQ22	V_{DDQ}	V_{DD}	V_{SS}	V_{DD}	V_{DDQ}	NC	NC	DQ14
H	$\overline{Doff}$	V_{REF}	V_{DDQ}	V_{DDQ}	V_{DD}	V_{SS}	V_{DD}	V_{DDQ}	V_{DDQ}	V_{REF}	ZQ
J	NC	NC	DQ32	V_{DDQ}	V_{DD}	V_{SS}	V_{DD}	V_{DDQ}	NC	DQ13	DQ4
K	NC	NC	DQ23	V_{DDQ}	V_{DD}	V_{SS}	V_{DD}	V_{DDQ}	NC	DQ12	DQ3
L	NC	DQ33	DQ24	V_{DDQ}	V_{SS}	V_{SS}	V_{SS}	V_{DDQ}	NC	NC	DQ2
M	NC	NC	DQ34	V_{SS}	V_{SS}	V_{SS}	V_{SS}	V_{SS}	NC	DQ11	DQ1
N	NC	DQ35	DQ25	V_{SS}	SA	SA	SA	V_{SS}	NC	NC	DQ10
P	NC	NC	DQ26	SA	SA	QVLD	SA	SA	NC	DQ9	DQ0
R	TDO	TCK	SA	SA	SA	ODT	SA	SA	SA	TMS	TDI

11 x 15 Bump BGA—15 x 17 mm^2 Body—1 mm Bump Pitch

Note:
BW0 controls writes to DQ0:DQ8; $\overline{BW1}$ controls writes to DQ9:DQ17; $\overline{BW2}$ controls writes to DQ18:DQ26; $\overline{BW3}$ controls writes to DQ27:DQ35.

 © 2012, GSI Technology
Specifications cited are subject to change without notice. For latest documentation see http://www.gsitechnology.com.

16M x 18 SigmaDDR-II+ SRAM—Top View

	1	2	3	4	5	6	7	8	9	10	11
A	$\overline{CQ}$	SA	SA	R/$\overline{W}$	$\overline{BW1}$	$\overline{K}$	SA	$\overline{LD}$	SA	SA	CQ
B	NC	DQ9	NC	SA	SA	K	$\overline{BW0}$	SA	NC	NC	DQ8
C	NC	NC	NC	V_{SS}	SA	NC	SA	V_{SS}	NC	DQ7	NC
D	NC	NC	DQ10	V_{SS}	V_{SS}	V_{SS}	V_{SS}	V_{SS}	NC	NC	NC
E	NC	NC	DQ11	V_{DDQ}	V_{SS}	V_{SS}	V_{SS}	V_{DDQ}	NC	NC	DQ6
F	NC	DQ12	NC	V_{DDQ}	V_{DD}	V_{SS}	V_{DD}	V_{DDQ}	NC	NC	DQ5
G	NC	NC	DQ13	V_{DDQ}	V_{DD}	V_{SS}	V_{DD}	V_{DDQ}	NC	NC	NC
H	$\overline{Doff}$	V_{REF}	V_{DDQ}	V_{DDQ}	V_{DD}	V_{SS}	V_{DD}	V_{DDQ}	V_{DDQ}	V_{REF}	ZQ
J	NC	NC	NC	V_{DDQ}	V_{DD}	V_{SS}	V_{DD}	V_{DDQ}	NC	DQ4	NC
K	NC	NC	DQ14	V_{DDQ}	V_{DD}	V_{SS}	V_{DD}	V_{DDQ}	NC	NC	DQ3
L	NC	DQ15	NC	V_{DDQ}	V_{SS}	V_{SS}	V_{SS}	V_{DDQ}	NC	NC	DQ2
M	NC	NC	NC	V_{SS}	V_{SS}	V_{SS}	V_{SS}	V_{SS}	NC	DQ1	NC
N	NC	NC	DQ16	V_{SS}	SA	SA	SA	V_{SS}	NC	NC	NC
P	NC	NC	DQ17	SA	SA	QVLD	SA	SA	NC	NC	DQ0
R	TDO	TCK	SA	SA	SA	ODT	SA	SA	SA	TMS	TDI

11 x 15 Bump BGA—15 x 17 mm^2 Body—1 mm Bump Pitch

Note:
$\overline{BW0}$ controls writes to DQ0:DQ8; $\overline{BW1}$ controls writes to DQ9:DQ17.

 © 2012, GSI Technology
Specifications cited are subject to change without notice. For latest documentation see http://www.gsitechnology.com.

Pin Description Table

Symbol	Description	Type	Comments
SA	Synchronous Address Inputs	Input	—
R/$\overline{W}$	Synchronous Read/Write	Input	High: Read Low: Write
$\overline{BW0}$–$\overline{BW3}$	Synchronous Byte Writes	Input	Active Low
$\overline{LD}$	Synchronous Load Pin	Input	Active Low
K	Input Clock	Input	Active High
$\overline{K}$	Input Clock	Input	Active Low
TMS	Test Mode Select	Input	—
TDI	Test Data Input	Input	—
TCK	Test Clock Input	Input	—
TDO	Test Data Output	Output	—
V_{REF}	HSTL Input Reference Voltage	Input	—
ZQ	Output Impedance Matching Input	Input	—
MCL	Must Connect Low	—	—
DQ	Data I/O	Input/Output	Three State
$\overline{Doff}$	Disable DLL when low	Input	Active Low
CQ	Output Echo Clock	Output	—
$\overline{CQ}$	Output Echo Clock	Output	—
V_{DD}	Power Supply	Supply	1.8 V Nominal
V_{DDQ}	Isolated Output Buffer Supply	Supply	1.8 V or 1.5 V Nominal
V_{SS}	Power Supply: Ground	Supply	—
QVLD	Q Valid Output	Output	—
ODT	On-Die Termination	Input	Low = Low Impedance Range High/Float = High Impedance Range
NC	No Connect	—	—

Notes:

1. NC = Not Connected to die or any other pin
2. When ZQ pin is directly connected to V_{DDQ}, output impedance is set to minimum value and it cannot be connected to ground or left unconnected.
3. K and $\overline{K}$ cannot be set to V_{REF} voltage.

 © 2012, GSI Technology

Specifications cited are subject to change without notice. For latest documentation see http://www.gsitechnology.com.

Background

Common I/O SRAMs, from a system architecture point of view, are attractive in read dominated or block transfer applications. Therefore, the SigmaDDR-II+ SRAM interface and truth table are optimized for burst reads and writes. Common I/O SRAMs are unpopular in applications where alternating reads and writes are needed because bus turnaround delays can cut high speed Common I/O SRAM data bandwidth in half.

Burst Operations

Read and write operations are "Burst" operations. In every case where a read or write command is accepted by the SRAM, it will respond by issuing or accepting two beats of data, executing a data transfer on subsequent rising edges of K and $\overline{K}$, as illustrated in the timing diagrams. This means that it is possible to load new addresses every K clock cycle. Addresses can be loaded less often, if intervening deselect cycles are inserted.

Deselect Cycles

Chip Deselect commands are pipelined to the same degree as read commands. This means that if a deselect command is applied to the SRAM on the next cycle after a read command captured by the SRAM, the device will complete the two beat read data transfer and then execute the deselect command, returning the output drivers to High-Z. A high on the $\overline{LD}$ pin prevents the RAM from loading read or write command inputs and puts the RAM into deselect mode as soon as it completes all outstanding burst transfer operations.

SigmaDDR-II+ Burst of 2 SRAM Read Cycles

The SRAM executes pipelined reads. The status of the Address, $\overline{LD}$ and R/$\overline{W}$ pins are evaluated on the rising edge of K. The read command ($\overline{LD}$ low and R/$\overline{W}$ high) is clocked into the SRAM by a rising edge of K.

SigmaDDR-II+ Burst of 2 SRAM Write Cycles

The status of the Address, $\overline{LD}$ and R/$\overline{W}$ pins are evaluated on the rising edge of K. The SRAM executes "late write" data transfers. Data in is due at the device inputs on the rising edge of K following the rising edge of K clock used to clock in the write command ($\overline{LD}$ and R/$\overline{W}$ low) and the write address. To complete the remaining beat of the burst of two write transfer, the SRAM captures data in on the next rising edge of $\overline{K}$, for a total of two transfers per address load.

Special Functions

Byte Write Control

Byte Write Enable pins are sampled at the same time that Data In is sampled. A high on the Byte Write Enable pin associated with a particular byte (e.g., $\overline{BW0}$ controls D0–D8 inputs) will inhibit the storage of that particular byte, leaving whatever data may be stored at the current address at that byte location undisturbed. Any or all of the Byte Write Enable pins may be driven High or Low during the data in sample times in a write sequence.

Each write enable command and write address loaded into the RAM provides the base address for a 2-beat data transfer. The x18 version of the RAM, for example, may write 36 bits in association with each address loaded. Any 9-bit byte may be masked in any write sequence.

Resulting Write Operation

Byte 1 D0–D8	Byte 2 D9–D17	Byte 3 D0–D8	Byte 4 D9–D17
Written	Unchanged	Unchanged	Written
Beat 1		Beat 2	

 © 2012, GSI Technology

Specifications cited are subject to change without notice. For latest documentation see http://www.gsitechnology.com.

Example x18 RAM Write Sequence using Byte Write Enables

Data In Sample Time	$\overline{BW0}$	$\overline{BW1}$	D0–D8	D9–D17
Beat 1	0	1	Data In	Don't Care
Beat 2	1	0	Don't Care	Data In

FLXDrive-II Output Driver Impedance Control

HSTL I/O SigmaDDR-II+ SRAMs are supplied with programmable impedance output drivers. The ZQ pin must be connected to V_{SS} via an external resistor, RQ, to allow the SRAM to monitor and adjust its output driver impedance. The value of RQ must be 5X the value of the desired RAM output impedance. The allowable range of RQ to guarantee impedance matching continuously is between 175Ω and 350Ω. Periodic readjustment of the output driver impedance is necessary as the impedance is affected by drifts in supply voltage and temperature. The SRAM's output impedance circuitry compensates for drifts in supply voltage and temperature. A clock cycle counter periodically triggers an impedance evaluation, resets and counts again. Each impedance evaluation may move the output driver impedance level one step at a time towards the optimum level. The output driver is implemented with discrete binary weighted impedance steps.

Input Termination Impedance Control

These SigmaQuad-II+ SRAMs are supplied with programmable input termination on Data (D), Byte Write ($\overline{BW}$), and Clock (K,$\overline{K}$) input receivers. The input termination is always enabled, and the impedance is programmed via the same RQ resistor (connected between the ZQ pin and V_{SS}) used to program output driver impedance, in conjuction with the ODT pin (6R). When the ODT pin is tied Low, input termination is "strong" (i.e., low impedance), and is nominally equal to RQ*0.3 Thevenin-equivalent when RQ is between 175Ω and 350Ω. When the ODT pin is tied High (or left floating—the pin has a small pull-up resistor), input termination is "weak" (i.e., high impedance), and is nominally equal to RQ*0.6 Thevenin-equivalent when RQ is between 175Ω and 250Ω. Periodic readjustment of the termination impedance occurs to compensate for drifts in supply voltage and temperature, in the same manner as for driver impedance (see above).

Note:
D, $\overline{BW}$, K, $\overline{K}$ inputs should always be driven High or Low; they should never be tri-stated (i.e., in a High-Z state). If the inputs are tri-stated, the input termination will pull the signal to $V_{DDQ}/2$ (i.e., to the switch point of the diff-amp receiver), which could cause the receiver to enter a meta-stable state, resulting in the receiver consuming more power than it normally would. This could result in the device's operating currents being higher.

Power-Up Initialization

After power-up, stable input clocks must be applied to the device for 20 µs prior to issuing read and write commands. See the t_{KInit} timing parameter in the **AC Electrical Characteristics** section.

Note:
The t_{KInit} requirement is independent of the tLock requirement, which specifies how many cycles of stable input clocks (2048) must be applied after the $\overline{Doff}$ pin has been driven High in order to ensure that the DLL locks properly (and the DLL must lock properly before issuing read and write commands). However, t_{KInit} is greater than t_{KLock}, even at the slowest permitted cycle time of 8.4 ns (2048*8.4 ns = 17.2 µs). Consequently, the 20 µs associated with t_{KInit} is sufficient to cover the t_{KLock} requirement at power-up if the $\overline{Doff}$ pin is driven High prior to the start of the 20 µs period.

Also, t_{KInit} only needs to be met once, immediately after power-up, whereas t_{KLock} must be met any time the DLL is disabled/reset (whether by toggling $\overline{Doff}$ Low or by stopping K clocks for > 30 ns).

 © 2012, GSI Technology
Specifications cited are subject to change without notice. For latest documentation see http://www.gsitechnology.com.

Common I/O SigmaDDR-II+ Burst of 2 SRAM Truth Table

K_n	$\overline{LD}$	$R/\overline{W}$	DQ		Operation
			A + 0	A + 1	
↑	1	X	Hi-Z / *	Hi-Z / *	Deselect
↑	0	0	$D@K_{n+1}$	$D@\overline{K}_{n+1}$	Write
↑	0	1	$Q@\overline{K}_{n+2}$	$Q@K_{n+3}$	Read

Notes:
1. "1" = input "high"; "0" = input "low"; "V" = input "valid"; "X" = input "don't care".
2. D1 and D2 indicate the first and second pieces of Write Data transferred during Write operations.
3. Q1 and Q2 indicate the first and second pieces of Read Data transferred during Read operations.
4. When On-Die Termination is disabled (ODT = 0), DQ drivers are disabled (i.e., DQ pins are tri-stated) for one cycle in response to NOP and Write commands, 2.5 cycles after the command is sampled.
5. When On-Die Termination is enabled (ODT = 1), DQ drivers are disabled for one cycle in response to NOP and Write commands, 2.5 cycles after the command is sampled. The state of the DQ pins during that time (denoted by "*" in the table above) is determined by the state of the DQ input termination. See the Input Termination Impedance Control section for more information.

Burst of 2 Byte Write Clock Truth Table

$\overline{BW}$	$\overline{BW}$	Current Operation	D	D
K ↑ (t_{n+1})	$\overline{K}$ ↑ ($t_{n+1½}$)	K ↑ (t_n)	K ↑ (t_{n+1})	$\overline{K}$ ↑ ($t_{n+1½}$)
T	T	Write Dx stored if $\overline{BWn}$ = 0 in both data transfers	D1	D2
T	F	Write Dx stored if $\overline{BWn}$ = 0 in 1st data transfer only	D1	X
F	T	Write Dx stored if $\overline{BWn}$ = 0 in 2nd data transfer only	X	D2
F	F	Write Abort No Dx stored in either data transfer	X	X

Notes:
1. "1" = input "high"; "0" = input "low"; "X" = input "don't care"; "T" = input "true"; "F" = input "false".
2. If one or more $\overline{BWn}$ = 0, then $\overline{BW}$ = "T", else $\overline{BW}$ = "F".

 © 2012, GSI Technology
Specifications cited are subject to change without notice. For latest documentation see http://www.gsitechnology.com.

x36 Byte Write Enable ($\overline{BWn}$) Truth Table

$\overline{BW0}$	$\overline{BW1}$	$\overline{BW2}$	$\overline{BW3}$	D0–D8	D9–D17	D18–D26	D27–D35
1	1	1	1	Don't Care	Don't Care	Don't Care	Don't Care
0	1	1	1	Data In	Don't Care	Don't Care	Don't Care
1	0	1	1	Don't Care	Data In	Don't Care	Don't Care
0	0	1	1	Data In	Data In	Don't Care	Don't Care
1	1	0	1	Don't Care	Don't Care	Data In	Don't Care
0	1	0	1	Data In	Don't Care	Data In	Don't Care
1	0	0	1	Don't Care	Data In	Data In	Don't Care
0	0	0	1	Data In	Data In	Data In	Don't Care
1	1	1	0	Don't Care	Don't Care	Don't Care	Data In
0	1	1	0	Data In	Don't Care	Don't Care	Data In
1	0	1	0	Don't Care	Data In	Don't Care	Data In
0	0	1	0	Data In	Data In	Don't Care	Data In
1	1	0	0	Don't Care	Don't Care	Data In	Data In
0	1	0	0	Data In	Don't Care	Data In	Data In
1	0	0	0	Don't Care	Data In	Data In	Data In
0	0	0	0	Data In	Data In	Data In	Data In

x18 Byte Write Enable ($\overline{BWn}$) Truth Table

$\overline{BW0}$	$\overline{BW1}$	D0–D8	D9–D17
1	1	Don't Care	Don't Care
0	1	Data In	Don't Care
1	0	Don't Care	Data In
0	0	Data In	Data In

 © 2012, GSI Technology

Specifications cited are subject to change without notice. For latest documentation see http://www.gsitechnology.com.

Absolute Maximum Ratings

(All voltages reference to V_{SS})

Symbol	Description	Value	Unit
V_{DD}	Voltage on V_{DD} Pins	–0.5 to 2.9	V
V_{DDQ}	Voltage in V_{DDQ} Pins	–0.5 to V_{DD}	V
V_{REF}	Voltage in V_{REF} Pins	–0.5 to V_{DDQ}	V
$V_{I/O}$	Voltage on I/O Pins	–0.5 to V_{DDQ} +0.5 (≤ 2.9 V max.)	V
V_{IN}	Voltage on Other Input Pins	–0.5 to V_{DDQ} +0.5 (≤ 2.9 V max.)	V
V_{TIN}	Input Voltage (TCK, TMS, TDI)	–0.5 to V_{DDQ} +0.5 (≤ 2.9V max.)	V
I_{IN}	Input Current on Any Pin	+/–100	mA dc
I_{OUT}	Output Current on Any I/O Pin	+/–100	mA dc
T_J	Maximum Junction Temperature	125	^oC
T_{STG}	Storage Temperature	–55 to 125	^oC

Note:

Permanent damage to the device may occur if the Absolute Maximum Ratings are exceeded. Operation should be restricted to Recommended Operating Conditions. Exposure to conditions exceeding the Recommended Operating Conditions, for an extended period of time, may affect reliability of this component.

Recommended Operating Conditions

Power Supplies

Parameter	Symbol	Min.	Typ.	Max.	Unit
Supply Voltage	V_{DD}	1.7	1.8	1.9	V
I/O Supply Voltage	V_{DDQ}	1.4	—	V_{DD}	V
Reference Voltage	V_{REF}	$V_{DDQ}/2$ – 0.05	—	$V_{DDQ}/2$ + 0.05	V

Note:.

The power supplies need to be powered up simultaneously or in the following sequence: V_{DD}, V_{DDQ}, V_{REF}, followed by signal inputs. The power down sequence must be the reverse. V_{DDQ} must not exceed V_{DD}. For more information, read AN1021 SigmaQuad and SigmaDDR Power-Up.

Operating Temperature

Parameter	Symbol	Min.	Typ.	Max.	Unit
Junction Temperature (Commercial Range Versions)	T_J	0	25	85	°C
Junction Temperature (Industrial Range Versions)*	T_J	–40	25	100	°C

Note:

* The part numbers of Industrial Temperature Range versions end with the character "I". Unless otherwise noted, all performance specifications quoted are evaluated for worst case in the temperature range marked on the device.

 © 2012, GSI Technology

Specifications cited are subject to change without notice. For latest documentation see http://www.gsitechnology.com.

Thermal Impedance

Package	Test PCB Substrate	θ JA (C°/W) Airflow = 0 m/s	θ JA (C°/W) Airflow = 1 m/s	θ JA (C°/W) Airflow = 2 m/s	θ JB (C°/W)	θ JC (C°/W)
165 BGA	4-layer	16.10	13.69	12.73	6.54	2.08

Notes:
1. Thermal Impedance data is based on a number of of samples from mulitple lots and should be viewed as a typical number.
2. Please refer to JEDEC standard JESD51-6.
3. The characteristics of the test fixture PCB influence reported thermal characteristics of the device. Be advised that a good thermal path to the PCB can result in cooling or heating of the RAM depending on PCB temperature.

HSTL I/O DC Input Characteristics

Parameter	Symbol	Min	Max	Units	Notes
Input Reference Voltage	V_{REF}	V_{DDQ} /2 – 0.05	V_{DDQ} /2 + 0.05	V	—
Input High Voltage	V_{IH1}	V_{REF} + 0.1	V_{DDQ} + 0.3	V	1
Input Low Voltage	V_{IL1}	–0.3	V_{REF} – 0.1	V	1
Input High Voltage	V_{IH2}	0.7 * V_{DDQ}	V_{DDQ} + 0.3	V	2,3
Input Low Voltage	V_{IL2}	–0.3	0.3 * V_{DDQ}	V	2,3

Notes:
1. Parameters apply to K, $\overline{K}$, SA, DQ, R/$\overline{W}$, $\overline{BW}$, $\overline{LD}$ during normal operation and JTAG boundary scan testing.
2. Parameters apply to $\overline{Doff}$, ODT during normal operation and JTAG boundary scan testing.
3. Parameters apply to ZQ during JTAG boundary scan testing only.

HSTL I/O AC Input Characteristics

Parameter	Symbol	Min	Max	Units	Notes
Input Reference Voltage	V_{REF}	V_{DDQ} /2 – 0.08	V_{DDQ} /2 + 0.08	V	—
Input High Voltage	V_{IH1}	V_{REF} + 0.2	V_{DDQ} + 0.5	V	1,2,3
Input Low Voltage	V_{IL1}	–0.5	V_{REF} – 0.2	V	1,2,3
Input High Voltage	V_{IH2}	V_{DDQ} – 0.2	V_{DDQ} + 0.5	V	4,5
Input Low Voltage	V_{IL2}	–0.5	0.2	V	4,5

Notes:
1. $V_{IH(MAX)}$ and $V_{IL(MIN)}$ apply for pulse widths less than one-quarter of the cycle time.
2. Input rise and fall times myust be a minimum of 1 V/ns, and within 10% of each other.
3. Parameters apply to K, $\overline{K}$, SA, DQ, R/$\overline{W}$, $\overline{BW}$, $\overline{LD}$ during normal operation and JTAG boundary scan testing.
4. Parameters apply to $\overline{Doff}$, ODT during normal operation and JTAG boundary scan testing.
5. Parameters apply to ZQ during JTAG boundary scan testing only.

 © 2012, GSI Technology
Specifications cited are subject to change without notice. For latest documentation see http://www.gsitechnology.com.

Capacitance

(T_A = 25°C, f = 1 MHz, V_{DD} = 1.8 V)

Parameter	Symbol	Test conditions	Typ.	Max.	Unit
Input Capacitance	C_{IN}	V_{IN} = 0 V	4	5	pF
Output Capacitance	C_{OUT}	V_{OUT} = 0 V	6	7	pF
Clock Capacitance	C_{CLK}	V_{IN} = 0 V	5	6	pF

Note:
This parameter is sample tested.

AC Test Conditions

Parameter	Conditions
Input high level	1.25 V
Input low level	0.25 V
Max. input slew rate	2 V/ns
Input reference level	0.75 V
Output reference level	V_{DDQ}/2

Note:
Test conditions as specified with output loading as shown unless otherwise noted.

AC Test Load Diagram

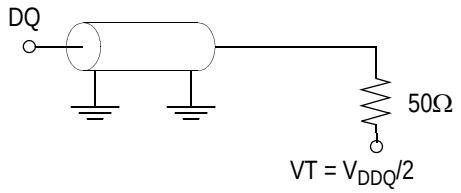

RQ = 250 Ω (HSTL I/O)
V_{REF} = 0.75 V

Input and Output Leakage Characteristics

Parameter	Symbol	Test Conditions	Min.	Max
Input Leakage Current (except mode pins)	I_{IL}	V_{IN} = 0 to V_{DD}	–2 uA	2 uA
$\overline{\text{Doff}}$	$I_{IL\overline{DOFF}}$	V_{IN} = 0 to V_{DD}	–2 uA	100 uA
ODT	$I_{IL\ ODT}$	V_{IN} = 0 to V_{DD}	–100 uA	2 uA
Output Leakage Current	I_{OL}	Output Disable, V_{OUT} = 0 to V_{DDQ}	–2 uA	2 uA

 © 2012, GSI Technology
Specifications cited are subject to change without notice. For latest documentation see http://www.gsitechnology.com.

HSTL I/O Output Driver DC Electrical Characteristics

Parameter	Symbol	Min.	Max.	Units	Notes
Output High Voltage	V_{OH1}	$V_{DDQ}/2 - 0.12$	$V_{DDQ}/2 + 0.12$	V	1, 3
Output Low Voltage	V_{OL1}	$V_{DDQ}/2 - 0.12$	$V_{DDQ}/2 + 0.12$	V	2, 3
Output High Voltage	V_{OH2}	$V_{DDQ} - 0.2$	—	V	4, 5
Output Low Voltage	V_{OL2}	—	0.2	V	4, 6

Notes:

1. $I_{OH} = (V_{DDQ}/2) / (RQ/5)$ +/– 15% @ $V_{OH} = V_{DDQ}/2$ (for: $175\Omega \leq RQ \leq 275\Omega$).
2. $I_{OL} = (V_{DDQ}/2) / (RQ/5)$ +/– 15% @ $V_{OL} = V_{DDQ}/2$ (for: $175\Omega \leq RQ \leq 275\Omega$).
3. Parameter tested with RQ = 250 Ω and V_{DDQ} = 1.5 V
4. $0\Omega \leq RQ \leq \infty\Omega$
5. $I_{OH} = -1.0$ mA
6. $I_{OL} = 1.0$ mA

 © 2012, GSI Technology

Specifications cited are subject to change without notice. For latest documentation see http://www.gsitechnology.com.

Operating Currents

Parameter	Symbol	Test Conditions	-550		-500		-450		-400		Unit	Notes
			0° to 70°C	–40° to 85°C	0° to 70°C	–40° to 85°C	0° to 70°C	–40° to 85°C	0° to 70°C	–40° to 85°C		
Operating Current (x36): DDR	I_{DD}	V_{DD} = Max, I_{OUT} = 0 mA Cycle Time ≥ t_{KHKH} Min	1050	1070	960	980	870	890	790	810	mA	2, 3
Operating Current (x18): DDR	I_{DD}	V_{DD} = Max, I_{OUT} = 0 mA Cycle Time ≥ t_{KHKH} Min	980	1000	910	930	830	850	750	770	mA	2, 3
Standby Current (NOP): DDR	I_{SB1}	Device deselected, I^{OUT} = 0 mA, f = Max, All Inputs ≤ 0.2 V or ≥ V_{DD} – 0.2 V	580	600	540	560	500	520	470	490	mA	2, 4

Notes:
1. Power measured with output pins floating.
2. Minimum cycle, I_{OUT} = 0 mA
3. Operating current is calculated with 50% read cycles and 50% write cycles.
4. Standby Current is only after all pending read and write burst operations are completed.

 © 2012, GSI Technology
Specifications cited are subject to change without notice. For latest documentation see http://www.gsitechnology.com.

AC Electrical Characteristics

Parameter	Symbol	-550		-500		-450		-400		Units	Notes
		Min	Max	Min	Max	Min	Max	Min	Max		
Clock											
K, $\overline{K}$ Clock Cycle Time	t_{KHKH}	1.81	8.4	2.0	8.4	2.2	8.4	2.5	8.4	ns	
tK Variable	t_{KVar}	—	0.15	—	0.15	—	0.15	—	0.2	ns	4
K, $\overline{K}$ Clock High Pulse Width	t_{KHKL}	0.4	—	0.4	—	0.4	—	0.4	—	cycle	
K, $\overline{K}$ Clock Low Pulse Width	t_{KLKH}	0.4	—	0.4	—	0.4	—	0.4	—	cycle	
K to $\overline{K}$ High	$t_{KH\overline{K}H}$	0.77	—	0.85	—	0.94	—	1.06	—	ns	
$\overline{K}$ to K High	$t_{\overline{K}HKH}$	0.77	—	0.85	—	0.94	—	1.06	—	ns	
DLL Lock Time	t_{KLock}	2048	—	2048	—	2048	—	2048	—	cycle	5
K Static to DLL reset	t_{KReset}	30	—	30	—	30	—	30	—	ns	
K, $\overline{K}$ Clock Initialization	t_{KInit}	20	—	20	—	20	—	20	—	µs	6
Output Times											
K, $\overline{K}$ Clock High to Data Output Valid	t_{KHQV}	—	0.45	—	0.45	—	0.45	—	0.45	ns	
K, $\overline{K}$ Clock High to Data Output Hold	t_{KHQX}	–0.45	—	–0.45	—	–0.45	—	–0.45	—	ns	
K, $\overline{K}$ Clock High to Echo Clock Valid	t_{KHCQV}	—	0.29	—	0.33	—	0.37	—	0.45	ns	
K, $\overline{K}$ Clock High to Echo Clock Hold	t_{KHCQX}	–0.29	—	–0.33	—	–0.37	—	–0.45	—	ns	
CQ, $\overline{CQ}$ High Output Valid	t_{CQHQV}	—	0.15	—	0.15	—	0.15	—	0.2	ns	
CQ, $\overline{CQ}$ High Output Hold	t_{CQHQX}	–0.15	—	–0.15	—	–0.15	—	–0.2	—	ns	
CQ, $\overline{CQ}$ High to QLVD	t_{QVLD}	–0.15	0.15	–0.15	0.15	–0.15	0.15	–0.2	0.2	ns	
CQ Phase Distortion	$t_{CQH\overline{CQ}H}$ $t_{\overline{CQ}HCQH}$	0.65	—	0.75	—	0.85	—	1.0	—	ns	
K Clock High to Data Output High-Z	t_{KHQZ}	—	0.45	—	0.45	—	0.45	—	0.45	ns	
K Clock High to Data Output Low-Z	t_{KHQX1}	–0.45	—	–0.45	—	–0.45	—	–0.45	—	ns	
Setup Times											
Address Input Setup Time	t_{AVKH}	0.23	—	0.25	—	0.275	—	0.4	—	ns	1
Control Input Setup Time ($\overline{RW}$, $\overline{LD}$)	t_{IVKH}	0.23	—	0.25	—	0.275	—	0.4	—	ns	2
Control Input Setup Time ($\overline{BWX}$)	t_{IVKH}	0.18	—	0.2	—	0.22	—	0.28	—	ns	3
Data Input Setup Time	t_{DVKH}	0.18	—	0.2	—	0.22	—	0.28	—	ns	
Hold Times											
Address Input Hold Time	t_{KHAX}	0.23	—	0.25	—	0.275	—	0.4	—	ns	1
Control Input Hold Time ($\overline{RW}$, $\overline{LD}$)	t_{KHIX}	0.23	—	0.25	—	0.275	—	0.4	—	ns	2
Control Input Hold Time ($\overline{BWX}$)	t_{KHIX}	0.18	—	0.2	—	0.22	—	0.28	—	ns	3
Data Input Hold Time	t_{KHDX}	0.18	—	0.2	—	0.22	—	0.28	—	ns	

Notes:

1. All Address inputs must meet the specified setup and hold times for all latching clock edges.
2. Control signals are $\overline{RW}$, $\overline{LD}$.
3. Control signals are $\overline{BW0}$, $\overline{BW1}$ and ($\overline{BW2}$, $\overline{BW3}$ for x36).
4. Clock phase jitter is the variance from clock rising edge to the next expected clock rising edge.
5. V_{DD} slew rate must be less than 0.1 V DC per 50 ns for DLL lock retention. DLL lock time begins once V_{DD} and input clock are stable.
6. After device power-up, 20µs of stable input clocks (as specified by t_{KInit}) must be supplied before reads and writes are issued.

 © 2012, GSI Technology

Specifications cited are subject to change without notice. For latest documentation see http://www.gsitechnology.com.

Read-Write K-Based Timing Diagram

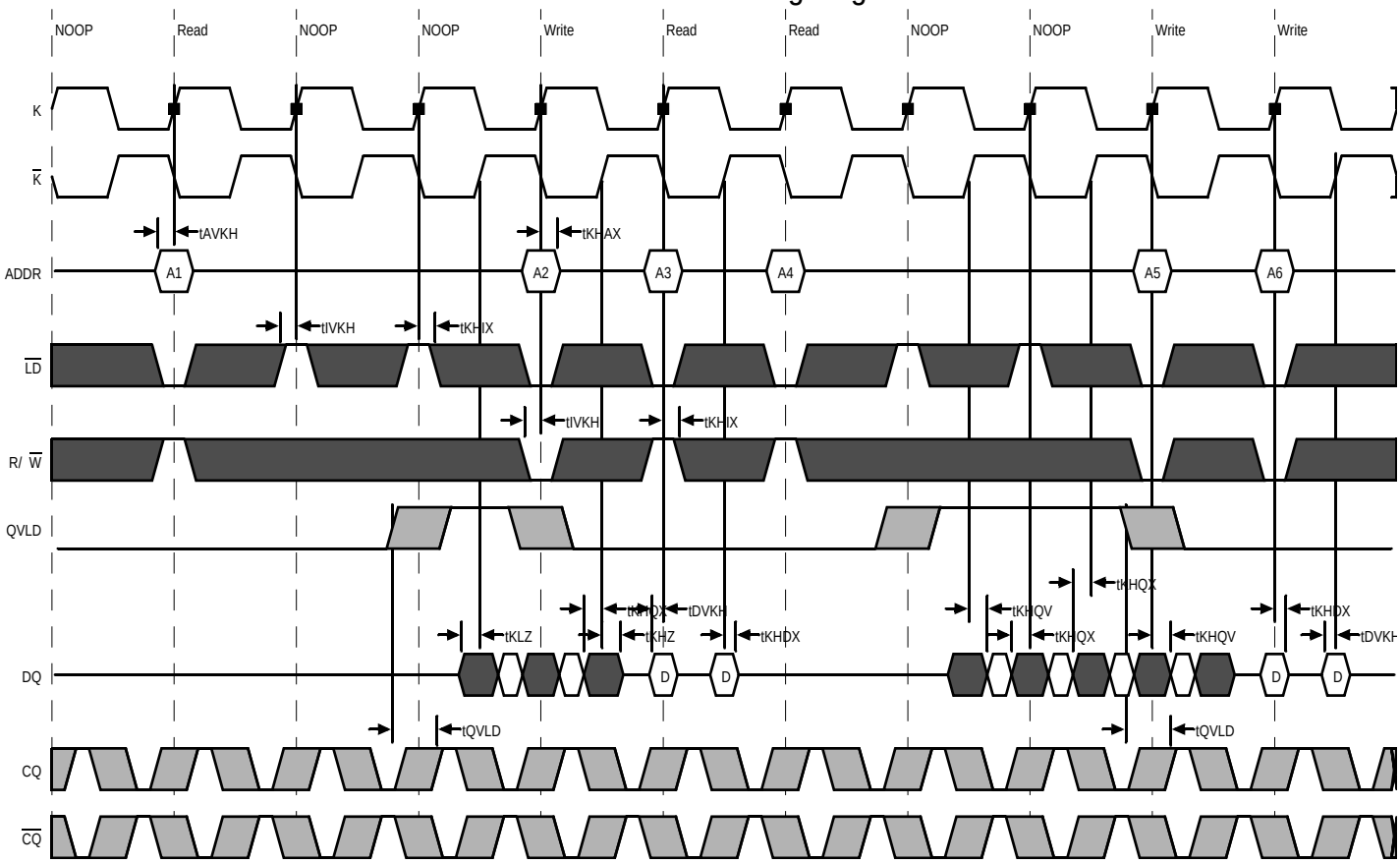

 © 2012, GSI Technology

Specifications cited are subject to change without notice. For latest documentation see http://www.gsitechnology.com.

Read-Write CQ-Based Timing Diagram

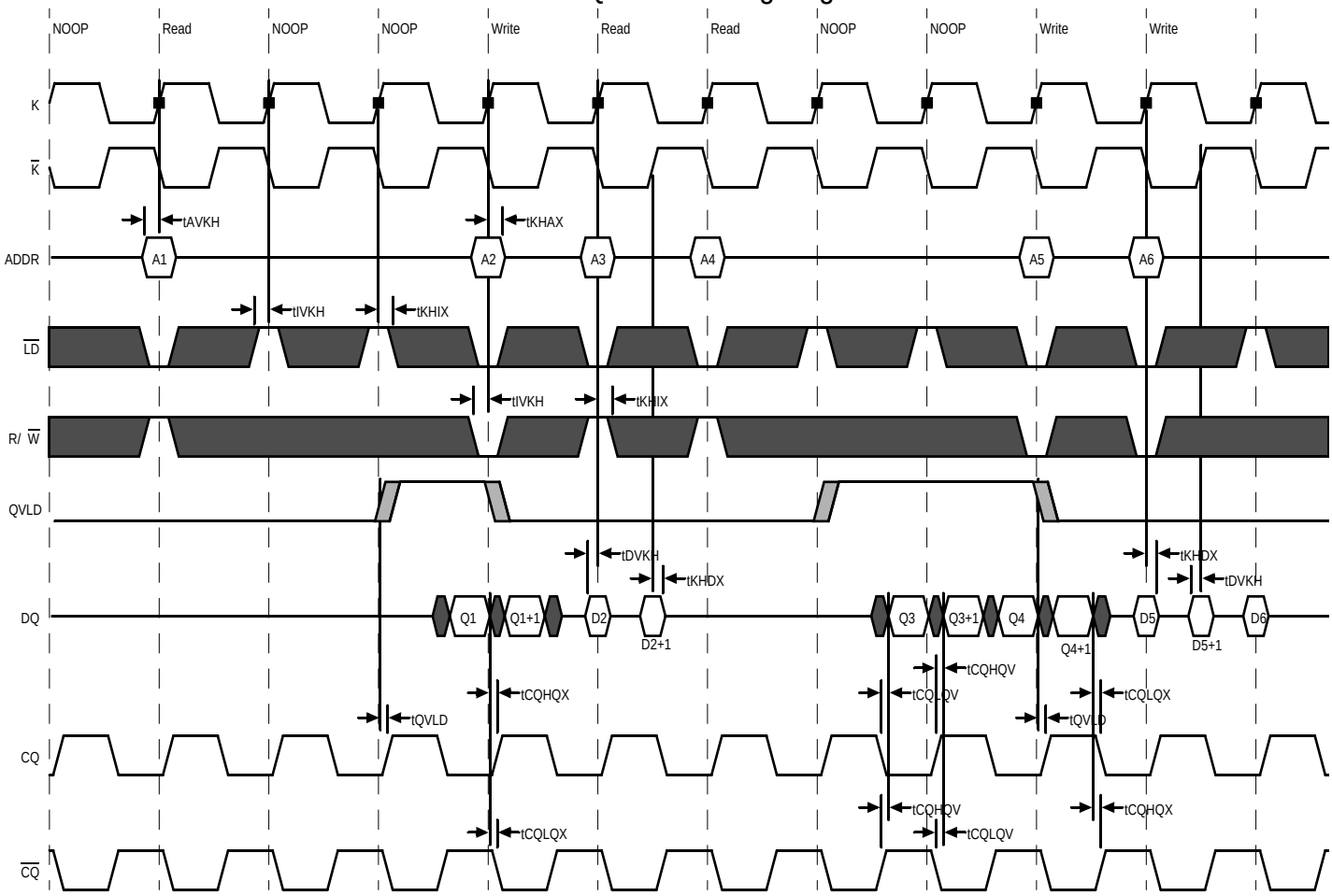

 © 2012, GSI Technology

Specifications cited are subject to change without notice. For latest documentation see http://www.gsitechnology.com.

JTAG Port Operation

Overview

The JTAG Port on this RAM operates in a manner that is compliant with IEEE Standard 1149.1-1990, a serial boundary scan interface standard (commonly referred to as JTAG). The JTAG Port input interface levels scale with V_{DD}. The JTAG output drivers are powered by V_{DD}.

Disabling the JTAG Port

It is possible to use this device without utilizing the JTAG port. The port is reset at power-up and will remain inactive unless clocked. TCK, TDI, and TMS are designed with internal pull-up circuits.To assure normal operation of the RAM with the JTAG Port unused, TCK, TDI, and TMS may be left floating or tied to either V_{DD} or V_{SS}. TDO should be left unconnected.

JTAG Pin Descriptions

Pin	Pin Name	I/O	Description
TCK	Test Clock	In	Clocks all TAP events. All inputs are captured on the rising edge of TCK and all outputs propagate from the falling edge of TCK.
TMS	Test Mode Select	In	The TMS input is sampled on the rising edge of TCK. This is the command input for the TAP controller state machine. An undriven TMS input will produce the same result as a logic one input level.
TDI	Test Data In	In	The TDI input is sampled on the rising edge of TCK. This is the input side of the serial registers placed between TDI and TDO. The register placed between TDI and TDO is determined by the state of the TAP Controller state machine and the instruction that is currently loaded in the TAP Instruction Register (refer to the TAP Controller State Diagram). An undriven TDI pin will produce the same result as a logic one input level.
TDO	Test Data Out	Out	Output that is active depending on the state of the TAP state machine. Output changes in response to the falling edge of TCK. This is the output side of the serial registers placed between TDI and TDO.

Note:
This device does not have a TRST (TAP Reset) pin. TRST is optional in IEEE 1149.1. The Test-Logic-Reset state is entered while TMS is held high for five rising edges of TCK. The TAP Controller is also reset automaticly at power-up.

JTAG Port Registers

Overview

The various JTAG registers, refered to as Test Access Port or TAP Registers, are selected (one at a time) via the sequences of 1s and 0s applied to TMS as TCK is strobed. Each of the TAP Registers is a serial shift register that captures serial input data on the rising edge of TCK and pushes serial data out on the next falling edge of TCK. When a register is selected, it is placed between the TDI and TDO pins.

Instruction Register

The Instruction Register holds the instructions that are executed by the TAP controller when it is moved into the Run, Test/Idle, or the various data register states. Instructions are 3 bits long. The Instruction Register can be loaded when it is placed between the TDI and TDO pins. The Instruction Register is automatically preloaded with the IDCODE instruction at power-up or whenever the controller is placed in Test-Logic-Reset state.

Bypass Register

The Bypass Register is a single bit register that can be placed between TDI and TDO. It allows serial test data to be passed through the RAM's JTAG Port to another device in the scan chain with as little delay as possible.

Boundary Scan Register

The Boundary Scan Register is a collection of flip flops that can be preset by the logic level found on the RAM's input or I/O pins. The flip flops are then daisy chained together so the levels found can be shifted serially out of the JTAG Port's TDO pin. The Boundary Scan Register also includes a number of place holder flip flops (always set to a logic 1). The relationship between the device pins and the bits in the Boundary Scan Register is described in the Scan Order Table following. The Boundary Scan

 © 2012, GSI Technology
Specifications cited are subject to change without notice. For latest documentation see http://www.gsitechnology.com.

Register, under the control of the TAP Controller, is loaded with the contents of the RAMs I/O ring when the controller is in Capture-DR state and then is placed between the TDI and TDO pins when the controller is moved to Shift-DR state. SAMPLE-Z, SAMPLE/PRELOAD and EXTEST instructions can be used to activate the Boundary Scan Register.

JTAG TAP Block Diagram

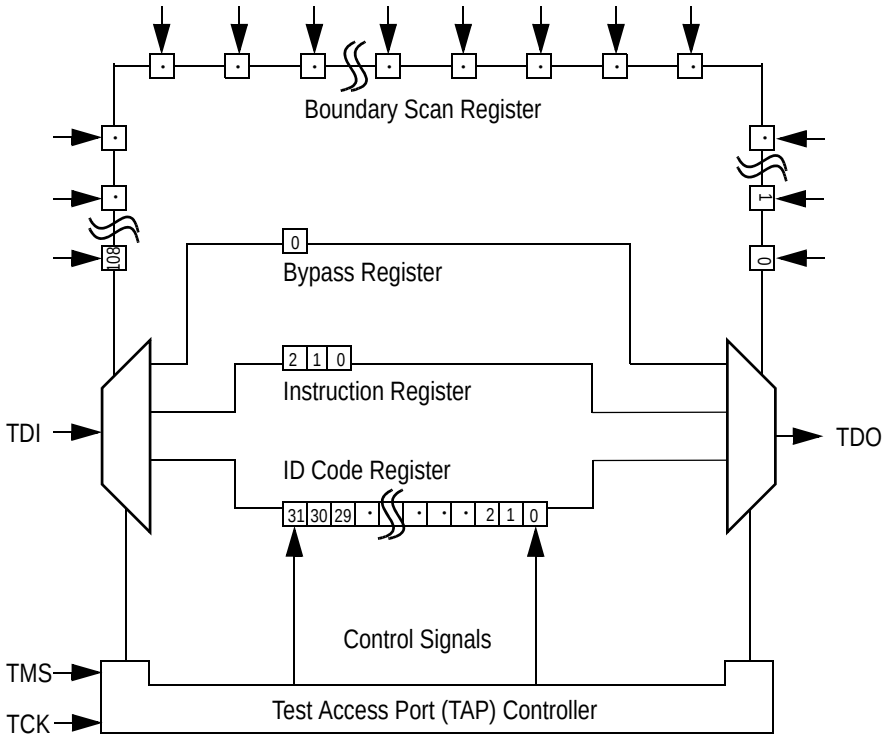

Identification (ID) Register

The ID Register is a 32-bit register that is loaded with a device and vendor specific 32-bit code when the controller is put in Capture-DR state with the IDCODE command loaded in the Instruction Register. The code is loaded from a 32-bit on-chip ROM. It describes various attributes of the RAM as indicated below. The register is then placed between the TDI and TDO pins when the controller is moved into Shift-DR state. Bit 0 in the register is the LSB and the first to reach TDO when shifting begins.

ID Register Contents

	See BSDL Model																				GSI Technology JEDEC Vendor ID Code											Presence Register
Bit #	31	30	29	28	27	26	25	24	23	22	21	20	19	18	17	16	15	14	13	12	11	10	9	8	7	6	5	4	3	2	1	0
	X	X	X	X	X	X	X	X	X	X	X	X	X	X	X	X	X	X	X	X	0	0	0	1	1	0	1	1	0	0	1	1

 © 2012, GSI Technology

Specifications cited are subject to change without notice. For latest documentation see http://www.gsitechnology.com.

Tap Controller Instruction Set

Overview

There are two classes of instructions defined in the Standard 1149.1-1990; the standard (Public) instructions, and device specific (Private) instructions. Some Public instructions are mandatory for 1149.1 compliance. Optional Public instructions must be implemented in prescribed ways. The TAP on this device may be used to monitor all input and I/O pads, and can be used to load address, data or control signals into the RAM or to preload the I/O buffers.

When the TAP controller is placed in Capture-IR state the two least significant bits of the instruction register are loaded with 01. When the controller is moved to the Shift-IR state the Instruction Register is placed between TDI and TDO. In this state the desired instruction is serially loaded through the TDI input (while the previous contents are shifted out at TDO). For all instructions, the TAP executes newly loaded instructions only when the controller is moved to Update-IR state. The TAP instruction set for this device is listed in the following table.

JTAG Tap Controller State Diagram

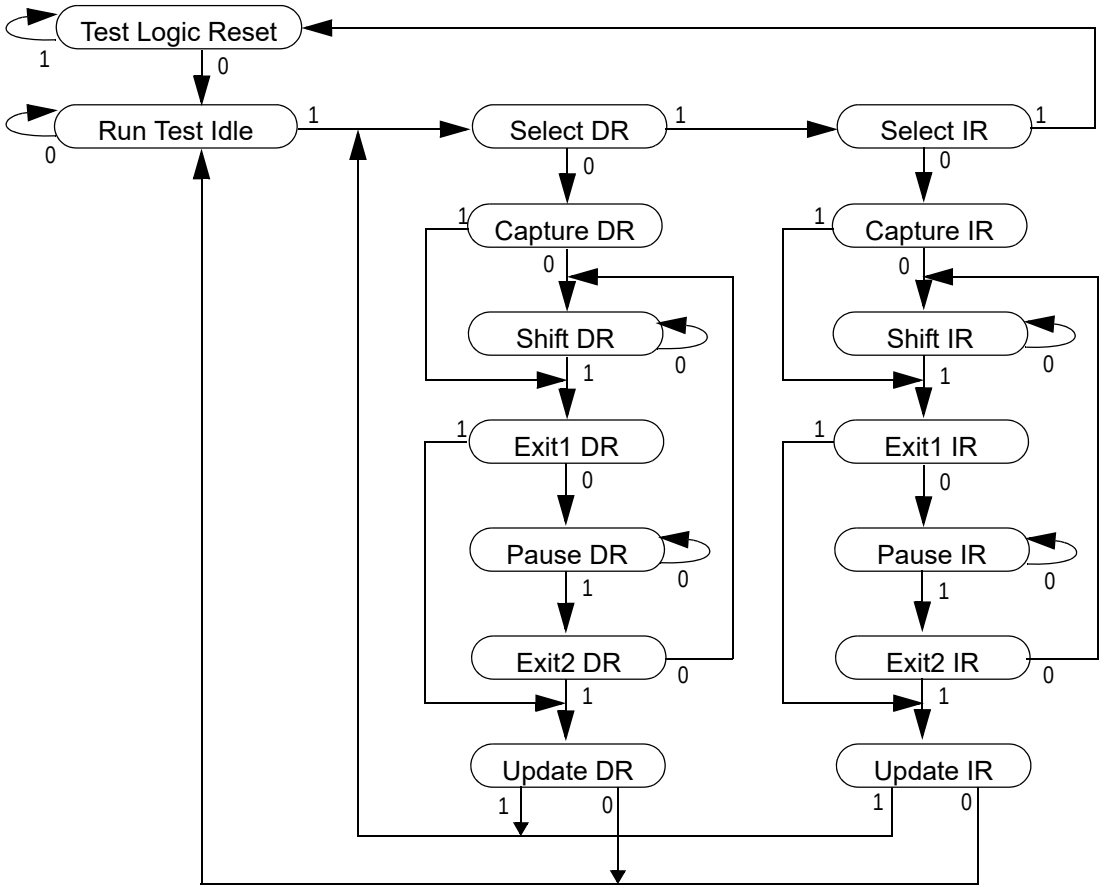

Instruction Descriptions

BYPASS

When the BYPASS instruction is loaded in the Instruction Register the Bypass Register is placed between TDI and TDO. This occurs when the TAP controller is moved to the Shift-DR state. This allows the board level scan path to be shortened to facilitate testing of other devices in the scan path.

 © 2012, GSI Technology

Specifications cited are subject to change without notice. For latest documentation see http://www.gsitechnology.com.

SAMPLE/PRELOAD

SAMPLE/PRELOAD is a Standard 1149.1 mandatory public instruction. When the SAMPLE / PRELOAD instruction is loaded in the Instruction Register, moving the TAP controller into the Capture-DR state loads the data in the RAMs input and I/O buffers into the Boundary Scan Register. Boundary Scan Register locations are not associated with an input or I/O pin, and are loaded with the default state identified in the Boundary Scan Chain table at the end of this section of the datasheet. Because the RAM clock is independent from the TAP Clock (TCK) it is possible for the TAP to attempt to capture the I/O ring contents while the input buffers are in transition (i.e. in a metastable state). Although allowing the TAP to sample metastable inputs will not harm the device, repeatable results cannot be expected. RAM input signals must be stabilized for long enough to meet the TAPs input data capture set-up plus hold time (tTS plus tTH). The RAMs clock inputs need not be paused for any other TAP operation except capturing the I/O ring contents into the Boundary Scan Register. Moving the controller to Shift-DR state then places the boundary scan register between the TDI and TDO pins.

EXTEST

EXTEST is an IEEE 1149.1 mandatory public instruction. It is to be executed whenever the instruction register is loaded with all logic 0s. The EXTEST command does not block or override the RAM's input pins; therefore, the RAM's internal state is still determined by its input pins.

Typically, the Boundary Scan Register is loaded with the desired pattern of data with the SAMPLE/PRELOAD command. Then the EXTEST command is used to output the Boundary Scan Register's contents, in parallel, on the RAM's data output drivers on the falling edge of TCK when the controller is in the Update-IR state.

Alternately, the Boundary Scan Register may be loaded in parallel using the EXTEST command. When the EXTEST instruction is selected, the sate of all the RAM's input and I/O pins, as well as the default values at Scan Register locations not associated with a pin, are transferred in parallel into the Boundary Scan Register on the rising edge of TCK in the Capture-DR state, the RAM's output pins drive out the value of the Boundary Scan Register location with which each output pin is associated.

IDCODE

The IDCODE instruction causes the ID ROM to be loaded into the ID register when the controller is in Capture-DR mode and places the ID register between the TDI and TDO pins in Shift-DR mode. The IDCODE instruction is the default instruction loaded in at power up and any time the controller is placed in the Test-Logic-Reset state.

SAMPLE-Z

If the SAMPLE-Z instruction is loaded in the instruction register, all RAM outputs are forced to an inactive drive state (high-Z) and the Boundary Scan Register is connected between TDI and TDO when the TAP controller is moved to the Shift-DR state.

 © 2012, GSI Technology

Specifications cited are subject to change without notice. For latest documentation see http://www.gsitechnology.com.

JTAG TAP Instruction Set Summary

Instruction	Code	Description	Notes
EXTEST	000	Places the Boundary Scan Register between TDI and TDO.	1
IDCODE	001	Preloads ID Register and places it between TDI and TDO.	1, 2
SAMPLE-Z	010	Captures I/O ring contents. Places the Boundary Scan Register between TDI and TDO. Forces all RAM output drivers to High-Z.	1
GSI	011	GSI Private Instruction.	1
SAMPLE/PRELOAD	100	Captures I/O ring contents. Places the Boundary Scan Register between TDI and TDO.	1
GSI	101	GSI Private Instruction.	1
GSI	110	GSI Private Instruction.	1
BYPASS	111	Places Bypass Register between TDI and TDO.	1

Notes:
1. Instruction codes expressed in binary, MSB on left, LSB on right.
2. Default instruction automatically loaded at power-up and in test-logic-reset state.

JTAG Port Recommended Operating Conditions and DC Characteristics

Parameter	Symbol	Min.	Max.	Unit	Notes
Test Port Input Low Voltage	V_{ILJ}	–0.3	0.3 * V_{DD}	V	1
Test Port Input High Voltage	V_{IHJ}	0.7 * V_{DD}	V_{DD} +0.3	V	1
TMS, TCK and TDI Input Leakage Current	I_{INHJ}	–300	1	uA	2
TMS, TCK and TDI Input Leakage Current	I_{INLJ}	–1	100	uA	3
TDO Output Leakage Current	I_{OLJ}	–1	1	uA	4
Test Port Output High Voltage	V_{OHJ}	V_{DD} – 0.2	—	V	5, 6
Test Port Output Low Voltage	V_{OLJ}	—	0.2	V	5, 7
Test Port Output CMOS High	V_{OHJC}	V_{DD} – 0.1	—	V	5, 8
Test Port Output CMOS Low	V_{OLJC}	—	0.1	V	5, 9

Notes:
1. Input Under/overshoot voltage must be –1 V < Vi < V_{DDn} +1 V not to exceed V maximum, with a pulse width not to exceed 20% tTKC.
2. $V_{ILJ} \leq V_{IN} \leq V_{DDn}$
3. $0\ V \leq V_{IN} \leq V_{ILJn}$
4. Output Disable, V_{OUT} = 0 to V_{DDn}
5. The TDO output driver is served by the V_{DD} supply.
6. I_{OHJ} = –2 mA
7. I_{OLJ} = + 2 mA
8. I_{OHJC} = –100 uA
9. I_{OLJC} = +100 uA

 © 2012, GSI Technology
Specifications cited are subject to change without notice. For latest documentation see http://www.gsitechnology.com.

JTAG Port AC Test Conditions

Parameter	Conditions
Input high level	V_{DD} – 0.2 V
Input low level	0.2 V
Input slew rate	1 V/ns
Input reference level	$V_{DD}/2$
Output reference level	$V_{DD}/2$

JTAG Port AC Test Load

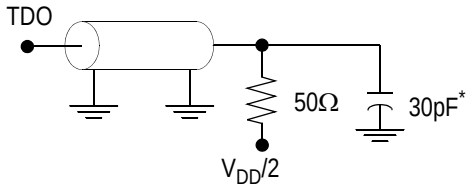

* Distributed Test Jig Capacitance

Notes:
1. Include scope and jig capacitance.
2. Test conditions as shown unless otherwise noted.

JTAG Port Timing Diagram

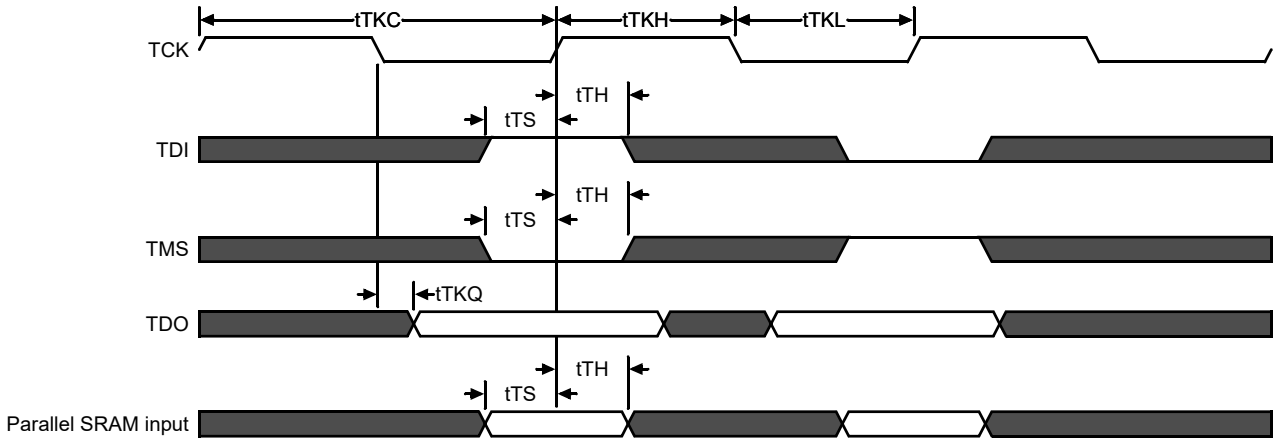

JTAG Port AC Electrical Characteristics

Parameter	Symbol	Min	Max	Unit
TCK Cycle Time	tTKC	50	—	ns
TCK Low to TDO Valid	tTKQ	—	20	ns
TCK High Pulse Width	tTKH	20	—	ns
TCK Low Pulse Width	tTKL	20	—	ns
TDI & TMS Set Up Time	tTS	10	—	ns
TDI & TMS Hold Time	tTH	10	—	ns

 © 2012, GSI Technology

Specifications cited are subject to change without notice. For latest documentation see http://www.gsitechnology.com.

Package Dimensions—165-Bump FPBGA (Package GE)

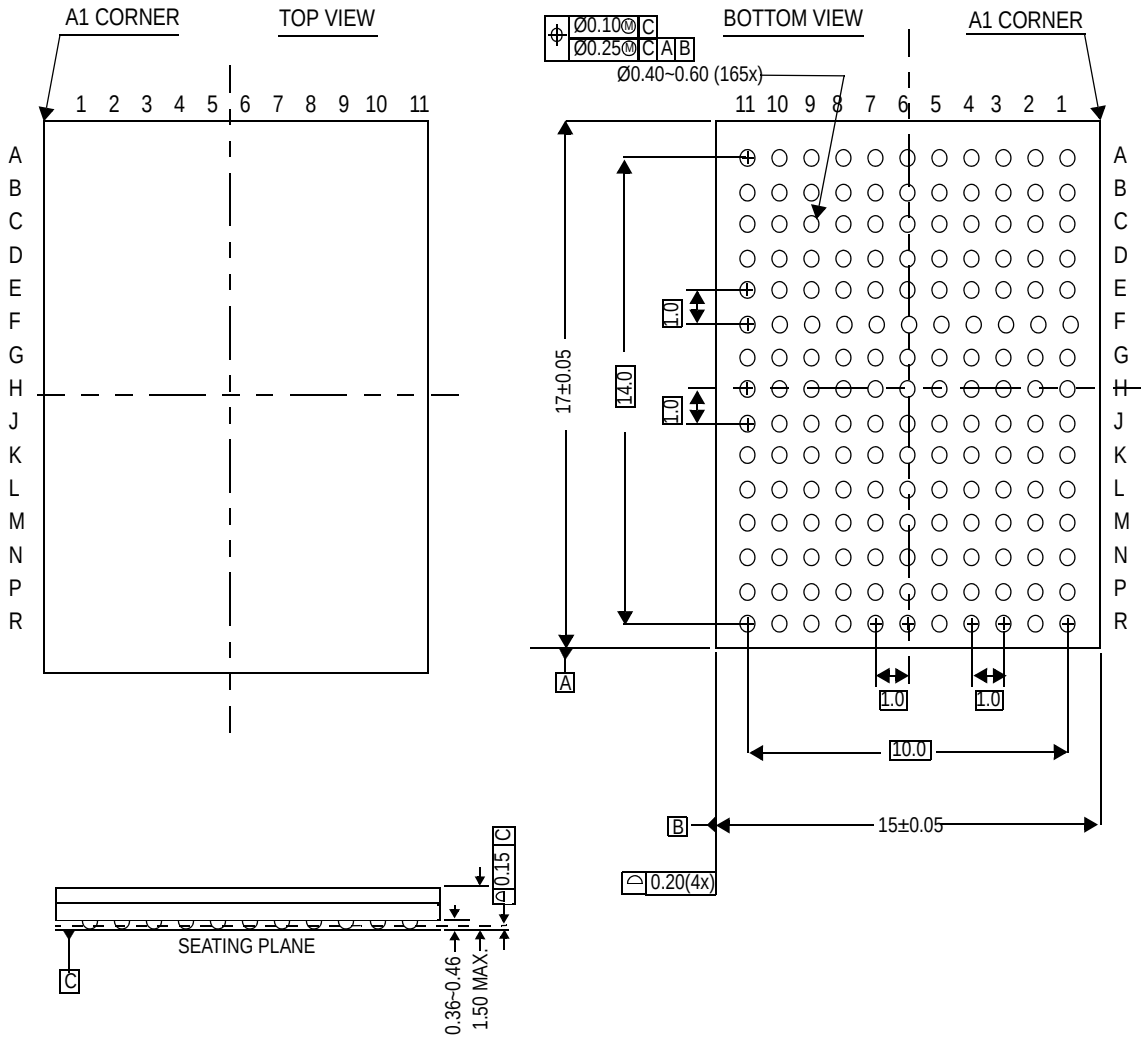

 © 2012, GSI Technology

Specifications cited are subject to change without notice. For latest documentation see http://www.gsitechnology.com.

Ordering Information GSI SigmaDDR-II+ SRAM

Org	Part Number[1]	Type	Package	Speed (MHz)	T_J[2]
16M x 18	GS82582TT20GE-550	SigmaDDR-II+ SRAM	RoHS-compliant 165-bump BGA	550	C
16M x 18	GS82582TT20GE-500	SigmaDDR-II+ SRAM	RoHS-compliant 165-bump BGA	500	C
16M x 18	GS82582TT20GE-450	SigmaDDR-II+ SRAM	RoHS-compliant 165-bump BGA	450	C
16M x 18	GS82582TT20GE-400	SigmaDDR-II+ SRAM	RoHS-compliant 165-bump BGA	400	C
16M x 18	GS82582TT20GE-550I	SigmaDDR-II+ SRAM	RoHS-compliant 165-bump BGA	550	I
16M x 18	GS82582TT20GE-500I	SigmaDDR-II+ SRAM	RoHS-compliant 165-bump BGA	500	I
16M x 18	GS82582TT20GE-450I	SigmaDDR-II+ SRAM	RoHS-compliant 165-bump BGA	450	I
16M x 18	GS82582TT20GE-400I	SigmaDDR-II+ SRAM	RoHS-compliant 165-bump BGA	400	I
8M x 36	GS82582TT38GE-550	SigmaDDR-II+ SRAM	RoHS-compliant 165-bump BGA	550	C
8M x 36	GS82582TT38GE-500	SigmaDDR-II+ SRAM	RoHS-compliant 165-bump BGA	500	C
8M x 36	GS82582TT38GE-450	SigmaDDR-II+ SRAM	RoHS-compliant 165-bump BGA	450	C
8M x 36	GS82582TT38GE-400	SigmaDDR-II+ SRAM	RoHS-compliant 165-bump BGA	400	C
8M x 36	GS82582TT38GE-550I	SigmaDDR-II+ SRAM	RoHS-compliant 165-bump BGA	550	I
8M x 36	GS82582TT38GE-500I	SigmaDDR-II+ SRAM	RoHS-compliant 165-bump BGA	500	I
8M x 36	GS82582TT38GE-450I	SigmaDDR-II+ SRAM	RoHS-compliant 165-bump BGA	450	I
8M x 36	GS82582TT38GE-400I	SigmaDDR-II+ SRAM	RoHS-compliant 165-bump BGA	400	I

Notes:

1. Customers requiring delivery in Tape and Reel should add the character “T” to the end of the part number. Example: GS82582TT38GE-400T.
2. C = Commercial Temperature Range. I = Industrial Temperature Range.

SigmaDDR-II+ SRAM Revision History

File Name	Format/Content	Description of changes
82582TTxxE_r1		• Creation of datasheet
82582TTxxE_r1_01	Content	• Removed x8 and x9 configurations
82582TTxxE_r1_02	Content	• Removed leaded part numbers • Added Power-Up Initialization section on page 10 • Added tKInit specification
82582TTxxE_r1_03	Content	• Removed Preliminary banner • Added Op Current CZ data • (Rev1.03a: Corrected erroneous information in Input and Output Leakage Characteristics table) • (Rev1.03b: Updated CQ Phase Distortion for 550 MHz)

 © 2012, GSI Technology

Specifications cited are subject to change without notice. For latest documentation see http://www.gsitechnology.com.