Low Cost Dual and Triple 300MHz Current Feedback Amplifiers with Shutdown

FEATURES

- **300MHz Bandwidth on ±5V (A_V = 1, 2 and –1)**
- **0.1dB Gain Flatness: 150MHz (A_V = 1, 2 and –1)**
- **Completely Off in Shutdown, 0μA Supply Current**
- High Slew Rate: 800V/μs
- Wide Supply Range:
  ±2V(4V) to ±6V(12V) (LT1398/LT1399)
  ±2V (4V) to ±7.5V (15V) (LT1399HV)
- 80mA Output Current
- Low Supply Current: 4.6mA/Amplifier
- Fast Turn-On Time: 30ns
- Fast Turn-Off Time: 40ns
- 16-Pin Narrow SO/Narrow SSOP Packages

APPLICATIONS

- RGB Cable Drivers
- LCD Drivers
- Spread Spectrum Amplifiers
- MUX Amplifiers
- Composite Video Cable Drivers
- Portable Equipment

DESCRIPTION

The LT®1399 and LT1399HV contain three independent 300MHz current feedback amplifiers, each with a shutdown pin. The LT1399HV is a higher voltage version of the LT1399. The LT1398 is a two amplifier version of the LT1399.

The LT1398/LT1399 operate on all supplies from a single 4V to ±6V. The LT1399HV operates on all supplies from 4V to ±7.5V.

Each amplifier draws 4.6mA when active. When disabled each amplifier draws zero supply current and its output becomes high impedance. The amplifiers turn on in only 30ns and turn off in 40ns, making them ideal in spread spectrum and portable equipment applications.

The LT1398/LT1399/LT1399HV are manufactured on Linear Technology's proprietary complementary bipolar process. The LT1399/LT1399HV are pin-for-pin upgrades to the LT1260 optimized for use on ±5V/±7.5V supplies.

, LTC and LT are registered trademarks of Linear Technology Corporation.

TYPICAL APPLICATION

3-Input Video MUX Cable Driver

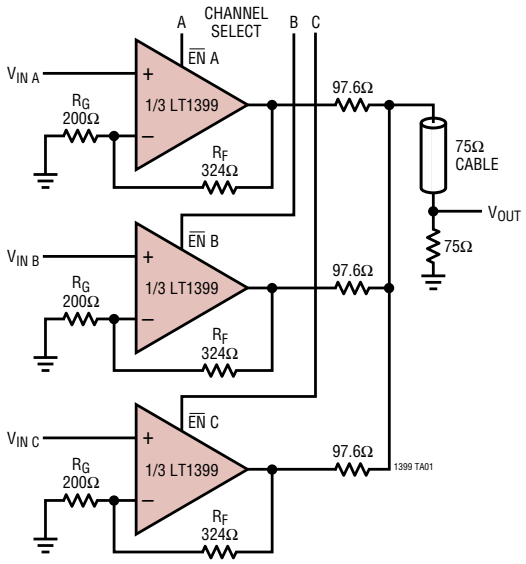

Square Wave Response

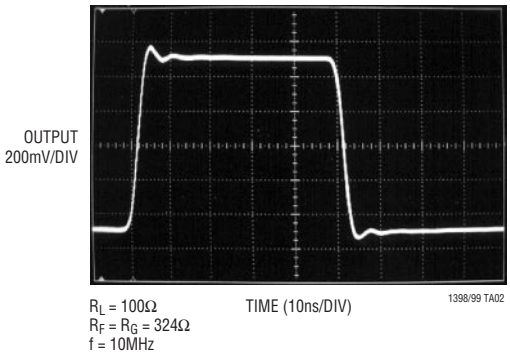

R_L = 100Ω
R_F = R_G = 324Ω
f = 10MHz

ABSOLUTE MAXIMUM RATINGS (Note 1)

Total Supply Voltage (V^+ to V^-)
- LT1398/LT1399 ..... 12.6V
- LT1399HV 15.5V

Input Current (Note 2) ..... ±10mA
Output Current ..... ±100mA
Differential Input Voltage (Note 2) ..... ±5V
Output Short-Circuit Duration (Note 3) ..... Continuous
Operating Temperature Range (Note 9) ... –40°C to 85°C
Specified Temperature Range (Note 4) .. –40°C to 85°C
Storage Temperature Range ..... –65°C to 150°C
Junction Temperature (Note 5) ..... 150°C
Lead Temperature (Soldering, 10 sec) ..... 300°C

PACKAGE/ORDER INFORMATION

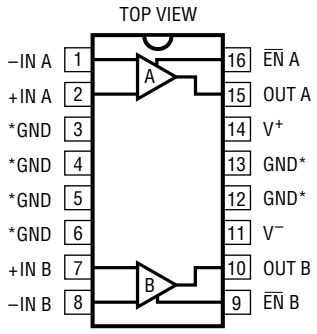

S PACKAGE
16-LEAD PLASTIC SO
T_{JMAX} = 150°C, θ_{JA} = 100°C/W

ORDER PART NUMBER

LT1398CS

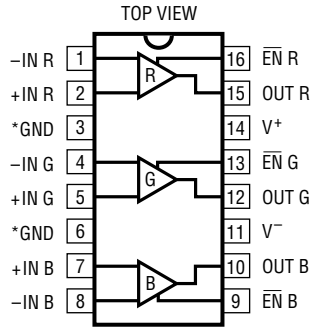

GN PACKAGE
16-LEAD PLASTIC SSOP

S PACKAGE
16-LEAD PLASTIC SO

T_{JMAX} = 150°C, θ_{JA} = 120°C/W (GN)
T_{JMAX} = 150°C, θ_{JA} = 100°C/W (S)

ORDER PART NUMBER

LT1399CGN
LT1399CS
LT1399HVCS
LT1399IGN
LT1399IS

GN PART MARKING

1399
1399I

* Ground pins are not internally connected. For best channel isolation, connect to ground. Consult factory for parts specified with wider operating temperature ranges.

ELECTRICAL CHARACTERISTICS (LT1398/LT1399)

The ● denotes specifications which apply over the specified operating temperature range, otherwise specifications are at T_A = 25°C. For each amplifier: V_{CM} = 0V, V_S = ±5V, $\overline{EN}$ = 0V, pulse tested, unless otherwise noted. (Note 4)

SYMBOL	PARAMETER	CONDITIONS		MIN	TYP	MAX	UNITS
V_{OS}	Input Offset Voltage				1.5	10	mV
			●			12	mV
$\Delta V_{OS}/\Delta T$	Input Offset Voltage Drift		●		15		µV/°C
I_{IN}^+	Noninverting Input Current				10	25	µA
			●			30	µA
I_{IN}^-	Inverting Input Current				10	50	µA
			●			60	µA
e_n	Input Noise Voltage Density	f = 1kHz, R_F = 1k, R_G = 10Ω, R_S = 0Ω			4.5		nV/√Hz
$+i_n$	Noninverting Input Noise Current Density	f = 1kHz			6		pA/√Hz
$-i_n$	Inverting Input Noise Current Density	f = 1kHz			25		pA/√Hz
R_{IN}	Input Resistance	V_{IN} = ±3.5V	●	0.3	1		MΩ
C_{IN}	Input Capacitance	Amplifier Enabled			2.0		pF
		Amplifier Disabled			2.5		pF
C_{OUT}	Output Capacitance	Amplifier Disabled			8.5		pF
V_{INH}	Input Voltage Range, High	V_S = ±5V	●	3.5	4.0		V
		V_S = 5V, 0V			4.0		V

ELECTRICAL CHARACTERISTICS (LT1398/LT1399)

The ● denotes specifications which apply over the specified operating temperature range, otherwise specifications are at T_A = 25°C. For each amplifier: V_{CM} = 0V, V_S = ±5V, $\overline{EN}$ = 0V, pulse tested, unless otherwise noted. (Note 4)

SYMBOL	PARAMETER	CONDITIONS		MIN	TYP	MAX	UNITS
V_{INL}	Input Voltage Range, Low	V_S = ±5V V_S = 5V, 0V	● 	−3.5	−4.0 1.0		V V
V_{OUTH}	Maximum Output Voltage Swing, High	V_S = ±5V, R_L = 100k V_S = ±5V, R_L = 100k V_S = 5V, 0V; R_L = 100k	 ● 	3.9 3.7	4.2 4.2		V V V
V_{OUTL}	Maximum Output Voltage Swing, Low	V_S = ±5V, R_L = 100k V_S = ±5V, R_L = 100k V_S = 5V, 0V; R_L = 100k	 ● 	−3.9 −3.7	−4.2 0.8		V V V
V_{OUTH}	Maximum Output Voltage Swing, High	V_S = ±5V, R_L = 150Ω V_S = ±5V, R_L = 150Ω V_S = 5V, 0V; R_L = 150Ω	 ● 	3.4 3.2	3.6 3.6		V V V
V_{OUTL}	Maximum Output Voltage Swing, Low	V_S = ±5V, R_L = 150Ω V_S = ±5V, R_L = 150Ω V_S = 5V, 0V; R_L = 150Ω	 ● 	−3.4 −3.2	−3.6 0.6		V V V
CMRR	Common Mode Rejection Ratio	V_{CM} = ±3.5V	●	42	52		dB
$-I_{CMRR}$	Inverting Input Current Common Mode Rejection	V_{CM} = ±3.5V V_{CM} = ±3.5V	 ●		10	16 22	μA/V μA/V
PSRR	Power Supply Rejection Ratio	V_S = ±2V to ±5V, $\overline{EN}$ = V^-	●	56	70		dB
$+I_{PSRR}$	Noninverting Input Current Power Supply Rejection	V_S = ±2V to ±5V, $\overline{EN}$ = V^-	 ●		1	2 3	μA/V μA/V
$-I_{PSRR}$	Inverting Input Current Power Supply Rejection	V_S = ±2V to ±5V, $\overline{EN}$ = V^-	●		2	7	μA/V
A_V	Large-Signal Voltage Gain	V_{OUT} = ±2V, R_L = 150Ω		50	65		dB
R_{OL}	Transimpedance, $\Delta V_{OUT}/\Delta I_{IN}^-$	V_{OUT} = ±2V, R_L = 150Ω		40	100		kΩ
I_{OUT}	Maximum Output Current	R_L = 0Ω	●	80			mA
I_S	Supply Current per Amplifier	V_{OUT} = 0V	●		4.6	6.5	mA
	Disable Supply Current per Amplifier	$\overline{EN}$ Pin Voltage = 4.5V, R_L = 150Ω	●		0.1	100	μA
$I_{\overline{EN}}$	Enable Pin Current		 ●		30	110 200	μA μA
SR	Slew Rate (Note 6)	A_V = 10, R_L = 150Ω		500	800		V/μs
t_{ON}	Turn-On Delay Time (Note 7)	R_F = R_G = 324Ω, R_L = 100Ω			30	75	ns
t_{OFF}	Turn-Off Delay Time (Note 7)	R_F = R_G = 324Ω, R_L = 100Ω			40	100	ns
t_r, t_f	Small-Signal Rise and Fall Time	R_F = R_G = 324Ω, R_L = 100Ω, V_{OUT} = $1V_{P-P}$			1.3		ns
t_{PD}	Propagation Delay	R_F = R_G = 324Ω, R_L = 100Ω, V_{OUT} = $1V_{P-P}$			2.5		ns
os	Small-Signal Overshoot	R_F = R_G = 324Ω, R_L = 100Ω, V_{OUT} = $1V_{P-P}$			10		%
t_S	Settling Time	0.1%, A_V = −1, R_F = R_G = 309Ω, R_L = 150Ω			25		ns
dG	Differential Gain (Note 8)	R_F = R_G = 324Ω, R_L = 150Ω			0.13		%
dP	Differential Phase (Note 8)	R_F = R_G = 324Ω, R_L = 150Ω			0.10		DEG

ELECTRICAL CHARACTERISTICS (LT1399HV)

The ● denotes specifications which apply over the specified operating temperature range, otherwise specifications are at T_A = 25°C. For each amplifier: V_{CM} = 0V, V_S = ±7.5V, $\overline{EN}$ = 0V, pulse tested, unless otherwise noted. (Note 4)

SYMBOL	PARAMETER	CONDITIONS		MIN	TYP	MAX	UNITS
V_{OS}	Input Offset Voltage				1.5	10	mV
			●			12	mV
$\Delta V_{OS}/\Delta T$	Input Offset Voltage Drift		●		15		µV/°C
I_{IN}^+	Noninverting Input Current				10	25	µA
			●			30	µA
I_{IN}^-	Inverting Input Current				10	50	µA
			●			60	µA
e_n	Input Noise Voltage Density	f = 1kHz, R_F = 1k, R_G = 10Ω, R_S = 0Ω, V_S = ±5V			4.5		nV/√Hz
$+i_n$	Noninverting Input Noise Current Density	f = 1kHz, V_S = ±5V			6		pA/√Hz
$-i_n$	Inverting Input Noise Current Density	f = 1kHz, V_S = ±5V			25		pA/√Hz
R_{IN}	Input Resistance	V_{IN} = ±6V	●	0.3	1		MΩ
C_{IN}	Input Capacitance	Amplifier Enabled			2.0		pF
		Amplifier Disabled			2.5		pF
C_{OUT}	Output Capacitance	Amplifier Disabled			8.5		pF
V_{INH}	Input Voltage Range, High	V_S = ±7.5V	●	6	6.5		V
		V_S = 7.5V, 0V			6.5		V
V_{INL}	Input Voltage Range, Low	V_S = ±7.5V	●	–6	–6.5		V
		V_S = 7.5V, 0V			1.0		V
V_{OUTH}	Maximum Output Voltage Swing, High	V_S = ±7.5V, R_L = 100k		6.4	6.7		V
		V_S = ±7.5V, R_L = 100k	●	6.1			V
		V_S = 7.5V, 0V; R_L = 100k			6.7		V
V_{OUTL}	Maximum Output Voltage Swing, Low	V_S = ±7.5V, R_L = 100k		–6.4	–6.7		V
		V_S = ±7.5V, R_L = 100k	●	–6.1			V
		V_S = 7.5V, 0V; R_L = 100k			0.8		V
V_{OUTH}	Maximum Output Voltage Swing, High	V_S = ±7.5V, R_L = 150Ω		5.4	5.8		V
		V_S = ±7.5V, R_L = 150Ω	●	5.1			V
		V_S = 7.5V, 0V; R_L = 150Ω			5.8		V
V_{OUTL}	Maximum Output Voltage Swing, Low	V_S = ±7.5V, R_L = 150Ω		–5.4	–5.8		V
		V_S = ±7.5V, R_L = 150Ω	●	–5.1			V
		V_S = 7.5V, 0V; R_L = 150Ω			0.6		V
CMRR	Common Mode Rejection Ratio	V_{CM} = ±6V	●	42	52		dB
$-I_{CMRR}$	Inverting Input Current Common Mode Rejection	V_{CM} = ±6V			10	16	µA/V
		V_{CM} = ±6V	●			22	µA/V
PSRR	Power Supply Rejection Ratio	V_S = ±2V to ±7.5V, $\overline{EN}$ = V^-	●	56	70		dB
$+I_{PSRR}$	Noninverting Input Current Power Supply Rejection	V_S = ±2V to ±7.5V, $\overline{EN}$ = V^-			1	2	µA/V
			●			3	µA/V
$-I_{PSRR}$	Inverting Input Current Power Supply Rejection	V_S = ±2V to ±7.5V, $\overline{EN}$ = V^-	●		2	7	µA/V
A_V	Large-Signal Voltage Gain	V_{OUT} = ±4.5V, R_L = 150Ω		50	65		dB
R_{OL}	Transimpedance, $\Delta V_{OUT}/\Delta I_{IN}^-$	V_{OUT} = ±4.5V, R_L = 150Ω		40	100		kΩ
I_{OUT}	Maximum Output Current	R_L = 0Ω	●	80			mA
I_S	Supply Current per Amplifier	V_{OUT} = 0V	●		4.6	7	mA
	Disable Supply Current per Amplifier	$\overline{EN}$ Pin Voltage = 7V, R_L = 150Ω	●		0.1	100	µA
I_{EN}	Enable Pin Current				30	110	µA
			●			200	µA

ELECTRICAL CHARACTERISTICS (LT1399HV)

The ● denotes specifications which apply over the specified operating temperature range, otherwise specifications are at T_A = 25°C. For each amplifier: V_{CM} = 0V, V_S = ±7.5V, $\overline{EN}$ = 0V, pulse tested, unless otherwise noted. (Note 4)

SYMBOL	PARAMETER	CONDITIONS		MIN	TYP	MAX	UNITS
SR	Slew Rate (Note 6)	A_V = 10, R_L = 150Ω, V_S = ±5V		500	800		V/µs
t_{ON}	Turn-On Delay Time (Note 7)	R_F = R_G = 324Ω, R_L = 100Ω, V_S = ±5V			30	75	ns
t_{OFF}	Turn-Off Delay Time (Note 7)	R_F = R_G = 324Ω, R_L = 100Ω, V_S = ±5V			40	100	ns
t_r, t_f	Small-Signal Rise and Fall Time	R_F = R_G = 324Ω, R_L = 100Ω, V_{OUT} = $1V_{P-P}$, V_S = ±5V			1.3		ns
t_{PD}	Propagation Delay	R_F = R_G = 324Ω, R_L = 100Ω, V_{OUT} = $1V_{P-P}$, V_S = ±5V			2.5		ns
os	Small-Signal Overshoot	R_F = R_G = 324Ω, R_L = 100Ω, V_{OUT} = $1V_{P-P}$, V_S = ±5V			10		%
t_S	Settling Time	0.1%, A_V = –1V, R_F = R_G = 309Ω, R_L = 150Ω, V_S = ±5V			25		ns
dG	Differential Gain (Note 8)	R_F = R_G = 324Ω, R_L = 150Ω, V_S = ±5V			0.13		%
dP	Differential Phase (Note 8)	R_F = R_G = 324Ω, R_L = 150Ω, V_S = ±5V			0.10		DEG

Note 1: Absolute Maximum Ratings are those values beyond which the life of a device may be impaired.

Note 2: This parameter is guaranteed to meet specified performance through design and characterization. It has not been tested.

Note 3: A heat sink may be required depending on the power supply voltage and how many amplifiers have their outputs short circuited.

Note 4: The LT1398C/LT1399C/LT1399HVC are guaranteed to meet specified performance from 0°C to 70°C and are designed, characterized and expected to meet these extended temperature limits, but are not tested or QA sampled at –40°C and 85°C. The LT1399I is guaranteed to meet specified performance from –40°C to 85°C.

Note 5: T_J is calculated from the ambient temperature T_A and the power dissipation P_D according to the following formula:

LT1398CS, LT1399CS, LT1399IS, LT1399HVCS:
$T_J = T_A + (P_D \bullet 100°C/W)$
LT1399CGN, LT1399IGN: $T_J = T_A + (P_D \bullet 120°C/W)$

Note 6: Slew rate is measured at ±2V on a ±3V output signal.

Note 7: Turn-on delay time (t_{ON}) is measured from control input to appearance of 1V at the output, for V_{IN} = 1V. Likewise, turn-off delay time (t_{OFF}) is measured from control input to appearance of 0.5V on the output for V_{IN} = 0.5V. This specification is guaranteed by design and characterization.

Note 8: Differential gain and phase are measured using a Tektronix TSG120YC/NTSC signal generator and a Tektronix 1780R Video Measurement Set. The resolution of this equipment is 0.1% and 0.1°. Ten identical amplifier stages were cascaded giving an effective resolution of 0.01% and 0.01°.

Note 9: The LT1398C, LT1398I, LT1399C, LT1399I, LT1399HVC and LT1399HVI are guaranteed functional over the operating temperature range of –40°C to 85°C.

TYPICAL AC PERFORMANCE

V_S (V)	A_V	R_L (Ω)	R_F (Ω)	R_G (Ω)	SMALL SIGNAL –3dB BW (MHz)	SMALL SIGNAL 0.1dB BW (MHz)	SMALL SIGNAL PEAKING (dB)
±5	1	100	365	–	300	150	0.05
±5	2	100	324	324	300	150	0
±5	–1	100	309	309	300	150	0

TYPICAL PERFORMANCE CHARACTERISTICS

Closed-Loop Gain vs Frequency ($A_V = 1$)

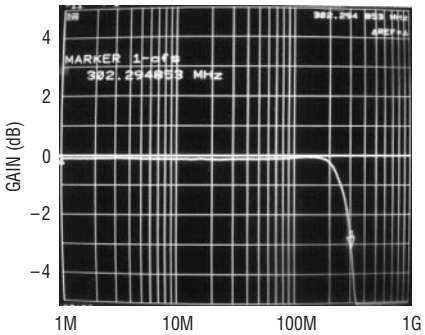

$V_S = \pm5V$
$V_{IN} = -10dBm$
$R_F = 365\Omega$
$R_L = 100\Omega$

Closed-Loop Gain vs Frequency ($A_V = 2$)

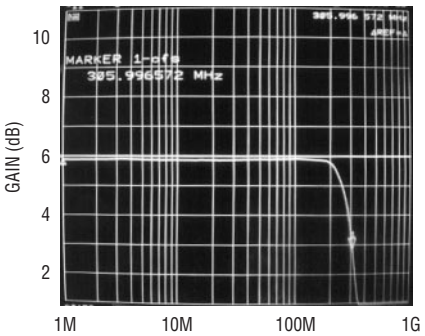

$V_S = \pm5V$
$V_{IN} = -10dBm$
$R_F = R_G = 324\Omega$
$R_L = 100\Omega$

Closed-Loop Gain vs Frequency ($A_V = -1$)

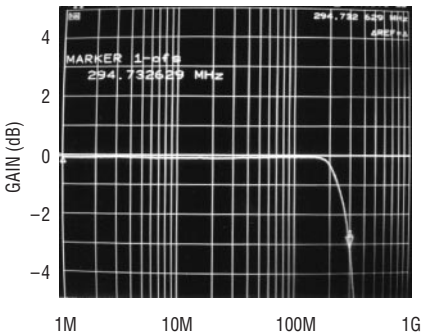

$V_S = \pm5V$
$V_{IN} = -10dBm$
$R_F = R_G = 309\Omega$
$R_L = 100\Omega$

Large-Signal Transient Response ($A_V = 1$)

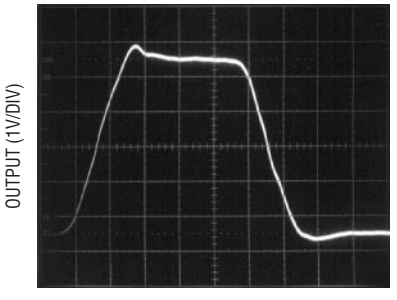

$V_S = \pm5V$
$V_{IN} = \pm2.5V$
$R_F = 365\Omega$
$R_L = 100\Omega$

Large-Signal Transient Response ($A_V = 2$)

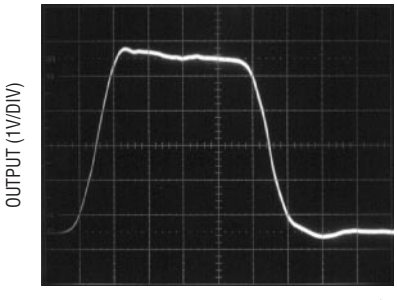

$V_S = \pm5V$
$V_{IN} = \pm1.25V$
$R_F = R_G = 324\Omega$
$R_L = 100\Omega$

Large-Signal Transient Response ($A_V = -1$)

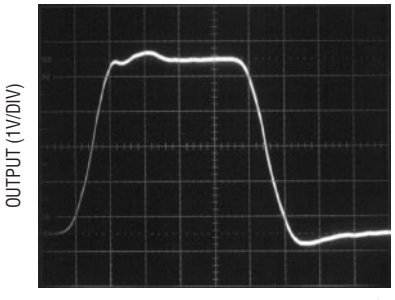

$V_S = \pm5V$
$V_{IN} = \pm2.5V$
$R_F = R_G = 309\Omega$
$R_L = 100\Omega$

2nd and 3rd Harmonic Distortion vs Frequency

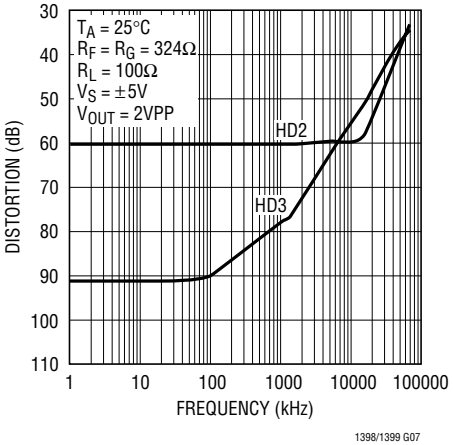

Maximum Undistorted Output Voltage vs Frequency

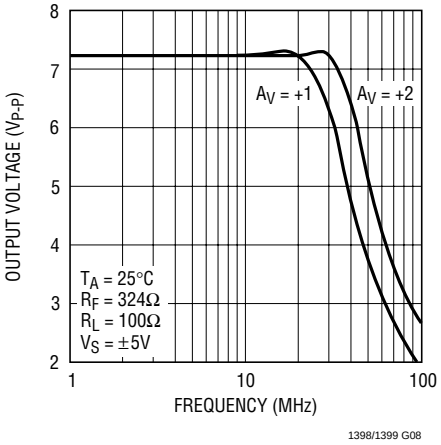

PSRR vs Frequency

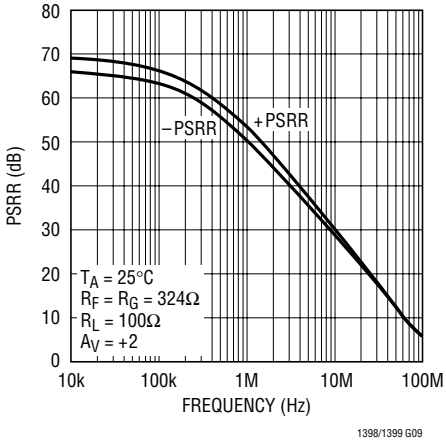

TYPICAL PERFORMANCE CHARACTERISTICS

Input Voltage Noise and Current Noise vs Frequency

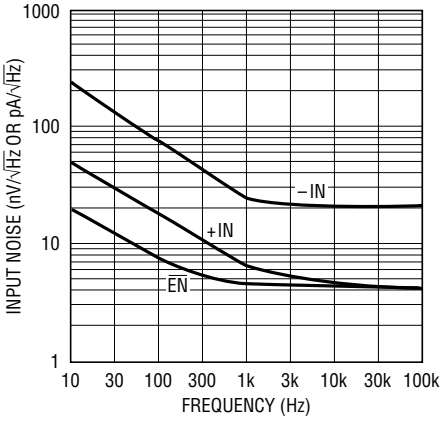

1398/1399 G10

Output Impedance vs Frequency

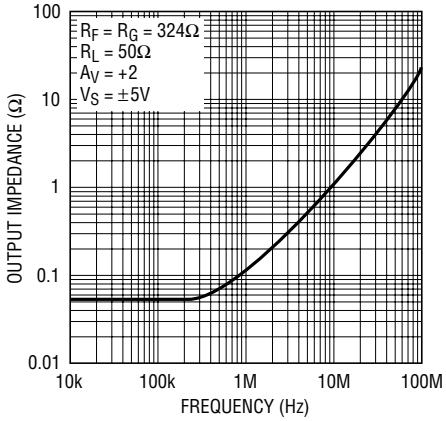

1398/1399 G11

Output Impedance (Disabled) vs Frequency

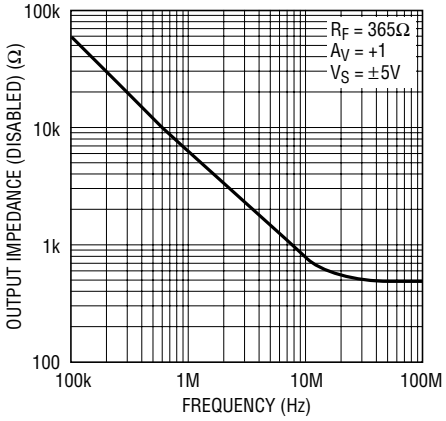

1398/1399 G12

Maximum Capacitive Load vs Feedback Resistor

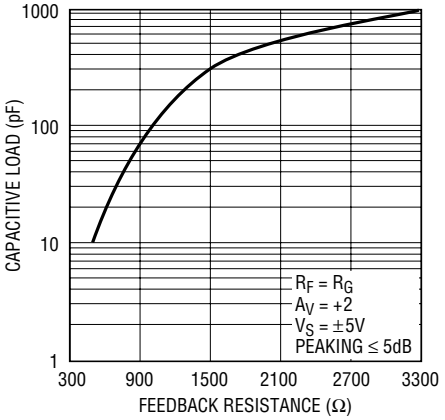

1398/1399 G13

Capacitive Load vs Output Series Resistor

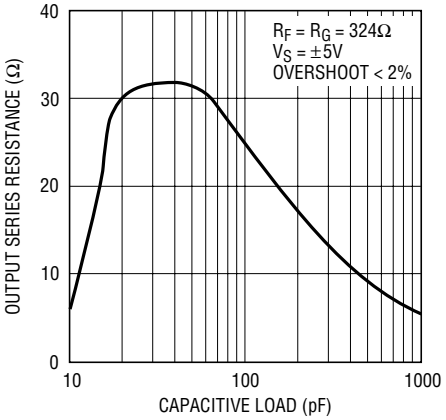

1398/1399 G14

Supply Current vs Supply Voltage

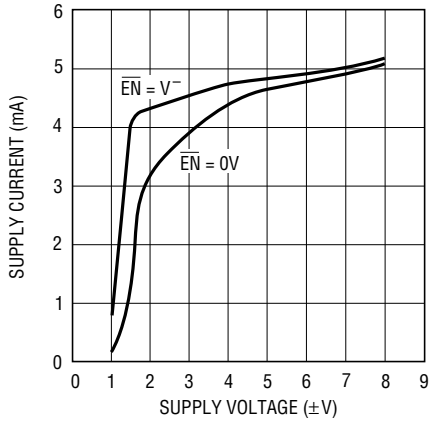

1398/1399 G15

Output Voltage Swing vs Temperature

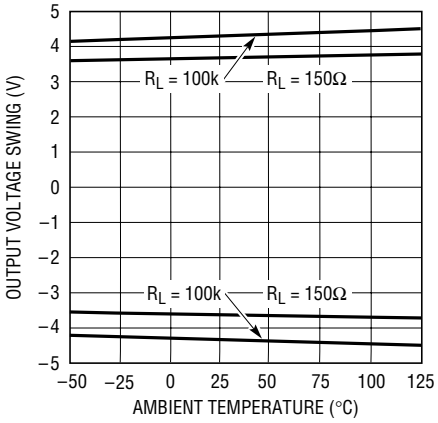

1398/1399 G16

Enable Pin Current vs Temperature

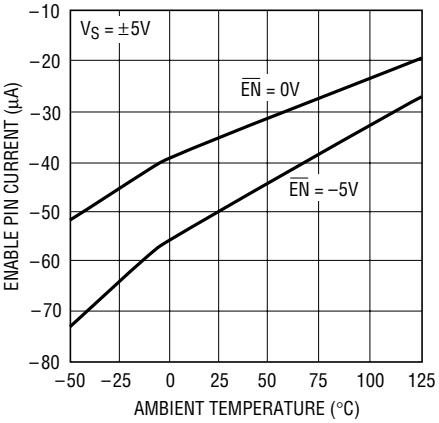

1398/1399 G17

Positive Supply Current per Amplifier vs Temperature

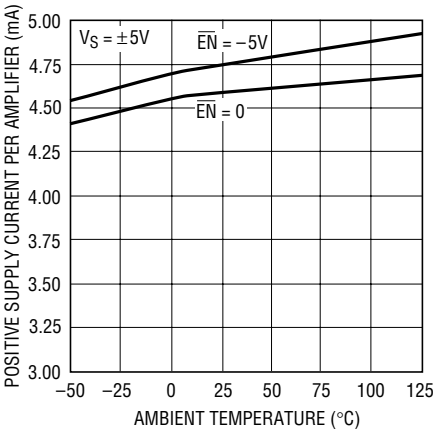

1398/1399 G18

TYPICAL PERFORMANCE CHARACTERISTICS

Input Offset Voltage vs Temperature

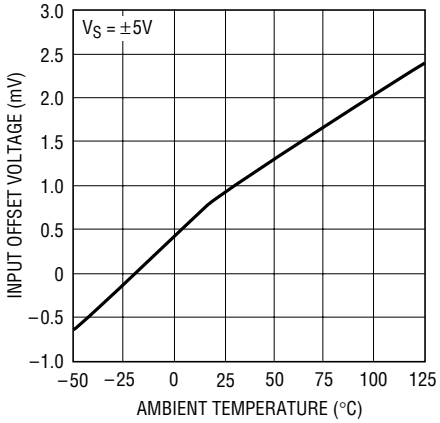

Input Bias Currents vs Temperature

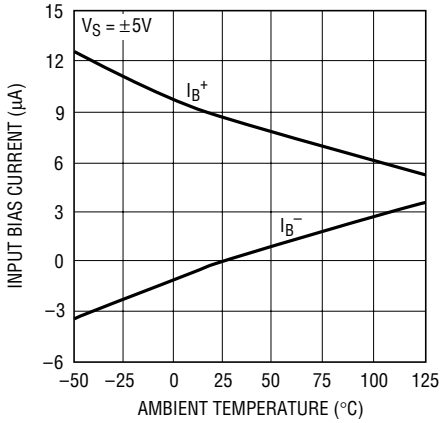

All Hostile Crosstalk

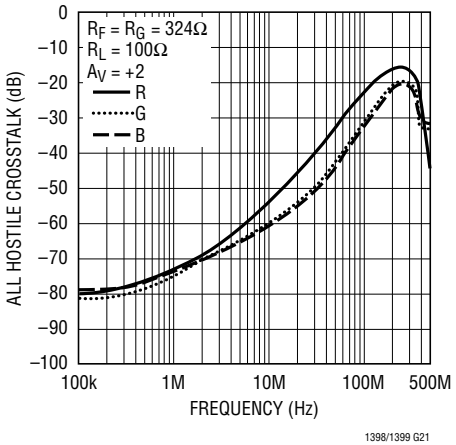

All Hostile Crosstalk (Disabled)

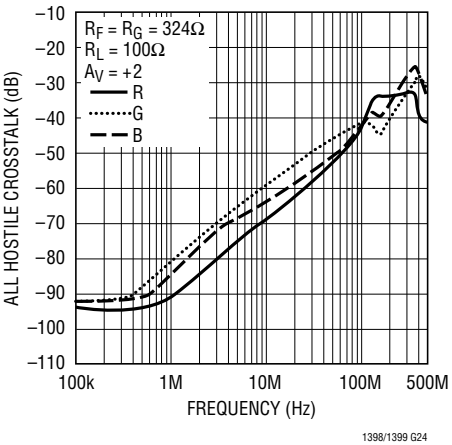

Propagation Delay

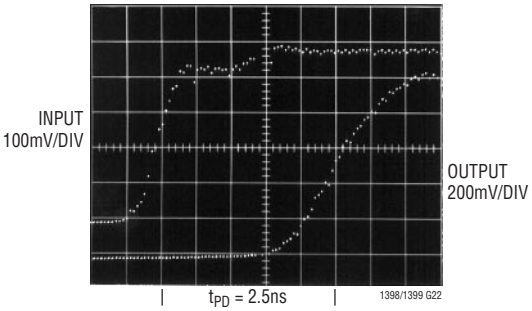

$A_V = +2$ TIME (500ps/DIV)
$R_L = 100\Omega$
$R_F = R_G = 324\Omega$

Rise Time and Overshoot

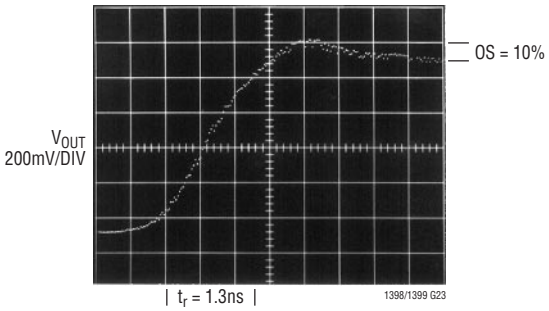

$A_V = +2$ TIME (500ps/DIV)
$R_L = 100\Omega$
$R_F = R_G = 324\Omega$

PIN FUNCTIONS

LT1398

–IN A (Pin 1): Inverting Input of A Channel Amplifier.

+IN A (Pin 2): Noninverting Input of A Channel Amplifier.

GND (Pins 3, 4, 5, 6): Ground. Not connected internally.

+IN B (Pin 7): Noninverting Input of B Channel Amplifier.

–IN B (Pin 8): Inverting Input of B Channel Amplifier.

$\overline{EN}$ B (Pin 9): B Channel Enable Pin. Logic low to enable.

OUT B (Pin 10): B Channel Output.

V^- (Pin 11): Negative Supply Voltage, Usually –5V.

GND (Pins 12, 13): Ground. Not connected internally.

V^+ (Pin 14): Positive Supply Voltage, Usually 5V.

OUT A (Pin 15): A Channel Output.

$\overline{EN}$ A (Pin 16): A Channel Enable Pin. Logic low to enable.

LT1399, LT1399HV

–IN R (Pin 1): Inverting Input of R Channel Amplifier.

+IN R (Pin 2): Noninverting Input of R Channel Amplifier.

GND (Pin 3): Ground. Not connected internally.

–IN G (Pin 4): Inverting Input of G Channel Amplifier.

+IN G (Pin 5): Noninverting Input of G Channel Amplifier.

GND (Pin 6): Ground. Not connected internally.

+IN B (Pin 7): Noninverting Input of B Channel Amplifier.

–IN B (Pin 8): Inverting Input of B Channel Amplifier.

$\overline{EN}$ B (Pin 9): B Channel Enable Pin. Logic low to enable.

OUT B (Pin 10): B Channel Output.

V^- (Pin 11): Negative Supply Voltage, Usually –5V.

OUT G (Pin 12): G Channel Output.

$\overline{EN}$ G (Pin 13): G Channel Enable Pin. Logic low to enable.

V^+ (Pin 14): Positive Supply Voltage, Usually 5V.

OUT R (Pin 15): R Channel Output.

$\overline{EN}$ R (Pin 16): R Channel Enable Pin. Logic low to enable.

APPLICATIONS INFORMATION

Feedback Resistor Selection

The small-signal bandwidth of the LT1398/LT1399/LT1399HV is set by the external feedback resistors and the internal junction capacitors. As a result, the bandwidth is a function of the supply voltage, the value of the feedback resistor, the closed-loop gain and the load resistor. The LT1398/LT1399 have been optimized for ±5V supply operation and have a –3dB bandwidth of 300MHz at a gain of 2. The LT1399HV provides performance similar to the LT1399. Please refer to the resistor selection guide in the Typical AC Performance table.

Capacitance on the Inverting Input

Current feedback amplifiers require resistive feedback from the output to the inverting input for stable operation. Take care to minimize the stray capacitance between the output and the inverting input. Capacitance on the inverting input to ground will cause peaking in the frequency response (and overshoot in the transient response).

Capacitive Loads

The LT1398/LT1399/LT1399HV can drive many capacitive loads directly when the proper value of feedback resistor is used. The required value for the feedback resistor will increase as load capacitance increases and as closed-loop gain decreases. Alternatively, a small resistor (5Ω to 35Ω) can be put in series with the output to isolate the capacitive load from the amplifier output. This has the advantage that the amplifier bandwidth is only reduced when the capacitive load is present. The disadvantage is that the gain is a function of the load resistance.

APPLICATIONS INFORMATION

Power Supplies

The LT1398/LT1399 will operate from single or split supplies from ±2V (4V total) to ±6V (12V total). The LT1399HV will operate from single or split supplies from ±2V (4V total) to ±7.5V (15V total). It is not necessary to use equal value split supplies, however the offset voltage and inverting input bias current will change. The offset voltage changes about 600µV per volt of supply mismatch. The inverting bias current will typically change about 2µA per volt of supply mismatch.

Slew Rate

Unlike a traditional voltage feedback op amp, the slew rate of a current feedback amplifier is not independent of the amplifier gain configuration. In a current feedback amplifier, both the input stage and the output stage have slew rate limitations. In the inverting mode, and for gains of 2 or more in the noninverting mode, the signal amplitude between the input pins is small and the overall slew rate is that of the output stage. For gains less than 2 in the noninverting mode, the overall slew rate is limited by the input stage.

The input slew rate of the LT1398/LT1399/LT1399HV is approximately 600V/µs and is set by internal currents and capacitances. The output slew rate is set by the value of the feedback resistor and internal capacitance. At a gain of 2 with 324Ω feedback and gain resistors and ±5V supplies, the output slew rate is typically 800V/µs. Larger feedback resistors will reduce the slew rate as will lower supply voltages.

Enable/Disable

Each amplifier of the LT1398/LT1399/LT1399HV has a unique high impedance, zero supply current mode which is controlled by its own $\overline{EN}$ pin. These amplifiers are designed to operate with CMOS logic; the amplifiers draw zero current when these pins are high. To activate each amplifier, its $\overline{EN}$ pin is normally pulled to a logic low. However, supply current will vary as the voltage between the V^+ supply and $\overline{EN}$ is varied. As seen in Figure 1, $+I_S$ does vary with ($V^+ – V_{\overline{EN}}$), particularly when the voltage difference is less than 3V. For normal operation, it is important to keep the $\overline{EN}$ pin at least 3V below the V^+ supply. If a V^+ of less than 3V is desired, and the amplifier will remain enabled at all times, then the $\overline{EN}$ pin should be tied to the $V^–$ supply. The enable pin current is approximately 30µA when activated. If using CMOS open-drain logic, an external 1k pull-up resistor is recommended to ensure that the LT1399 remains disabled in spite of any CMOS drain-leakage currents.

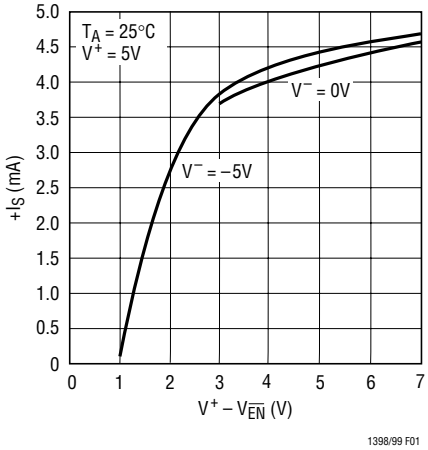

Figure 1. $+I_S$ vs ($V^+ – V_{EN}$)

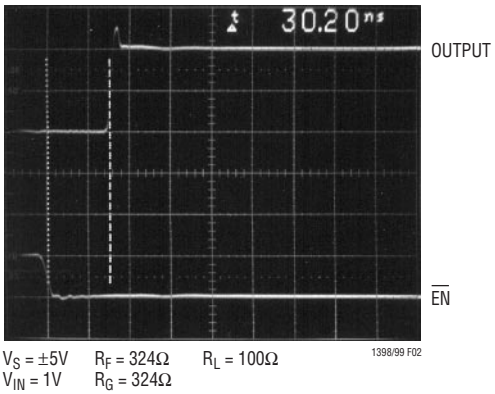

Figure 2. Amplifier Enable Time, A_V = 2

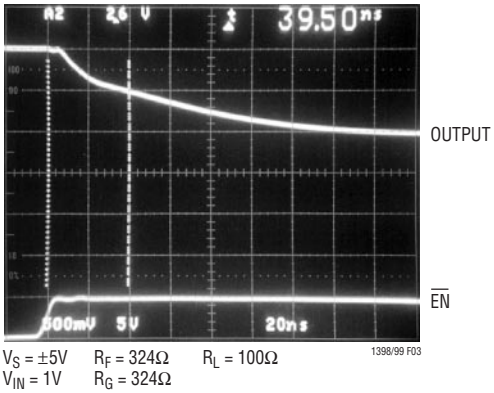

Figure 3. Amplifier Disable Time, A_V = 2

APPLICATIONS INFORMATION

The enable/disable times are very fast when driven from standard 5V CMOS logic. Each amplifier enables in about 30ns (50% point to 50% point) while operating on ±5V supplies (Figure 2). Likewise, the disable time is approximately 40ns (50% point to 50% point) (Figure 3).

Differential Input Signal Swing

To avoid any breakdown condition on the input transistors, the differential input swing must be limited to ±5V. In normal operation, the differential voltage between the input pins is small, so the ±5V limit is not an issue. In the disabled mode however, the differential swing can be the same as the input swing, and there is a risk of device breakdown if input voltage range has not been properly considered.

3-Input Video MUX Cable Driver

The application on the first page of this data sheet shows a low cost, 3-input video MUX cable driver. The scope photo below (Figure 4) displays the cable output of a 30MHz square wave driving 150Ω. In this circuit the active amplifier is loaded by the sum of R_F and R_G of each disabled amplifier. Resistor values have been chosen to keep the total back termination at 75Ω while maintaining a gain of 1 at the 75Ω load. The switching time between any two channels is approximately 32ns when both enable pins are driven.

When building the board, care was taken to minimize trace lengths at the inverting input. The ground plane was also pulled away from R_F and R_G on both sides of the board to minimize stray capacitance.

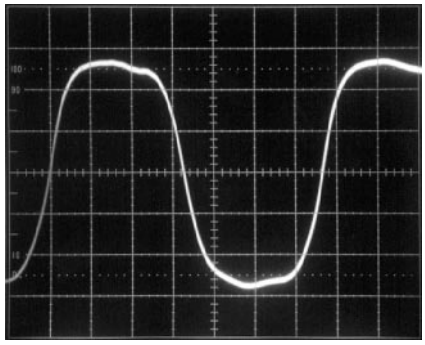

R_L = 150Ω
R_F = R_G = 324Ω
f = 10MHz
5ns/DIV
1398/99 F04

Figure 4. Square Wave Response

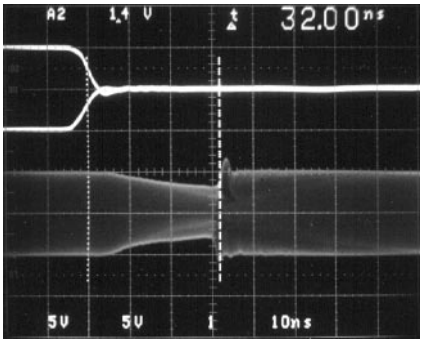

V_S = ±5V
V_{INA} = V_{INB} = $2V_{P-P}$
at 3.58MHz
20ns/DIV
1398/99 F05

Figure 5. 3-Input Video MUX Switching Response (A_V = 2)

Using the LT1399 to Drive LCD Displays

Driving the current crop of XGA and UXGA LCD displays can be a difficult problem because they require drive voltages of up to 12V, are usually a capacitive load of over 300pF, and require fast settling. The LT1399HV is particularly well suited for driving these LCD displays because it is capable of swinging more than ±6V on ±7.5V supplies, and it can drive large capacitive loads with a small series resistor at the output, minimizing settling time. As seen in Figures 6 and 7, at a gain of +3 with a 16.9Ω output series resistor and a 330pF load, the LT1399HV is capable of settling to 0.1% in 30ns for a 6V step. Similarly, a 12V output step settles in 70ns.

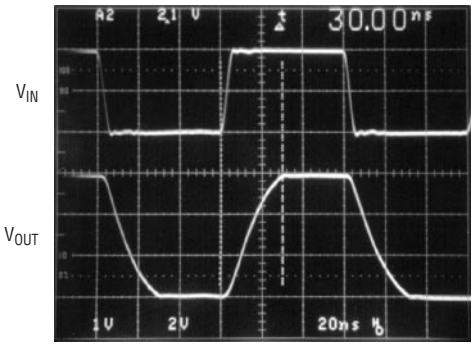

V_S = ±5V
R_F = 324Ω
R_G = 162Ω
R_S = 16.9Ω
C_L = 330pF
20ns/DIV
1398/99 AI06

Figure 6. LT1399/LT1399HV Large-Signal Pulse Response

APPLICATIONS INFORMATION

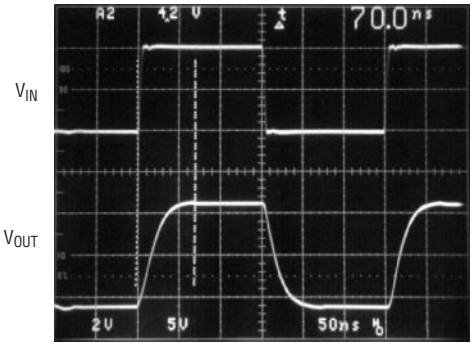

V_S = ±7.5V 50ns/DIV
R_F = 324Ω
R_G = 162Ω
R_S = 16.9Ω
C_L = 330pF

Figure 7. LT1399HV Output Voltage Swing

Buffered RGB to Color-Difference Matrix

Two LT1398s can be used to create buffered color-difference signals from RGB inputs (Figure 8). In this application, the R input arrives via 75Ω coax. It is routed to the noninverting input of LT1398 amplifier A1 and to a 1082Ω resistor R8. There is also an 80.6Ω termination resistor R11, which yields a 75Ω input impedance at the R input when considered in parallel with R8. R8 connects to the inverting input of a second LT1398 amplifier (A2), which also sums the weighted G and B inputs to create a –0.5 • Y output. LT1398 amplifier B1 then takes the –0.5 • Y output and amplifies it by a gain of –2, resulting in the Y output. Amplifier A1 is configured in a noninverting gain of 2 with the bottom of the gain resistor R2 tied to the Y output. The output of amplifier A1 thus results in the color-difference output R-Y.

The B input is similar to the R input. It arrives via 75Ω coax, and is routed to the noninverting input of LT1398 amplifier B2, and to a 2940Ω resistor R10. There is also a 76.8Ω termination resistor R13, which yields a 75Ω input impedance when considered in parallel with R10. R10 also connects to the inverting input of amplifier A2, adding the B contribution to the Y signal as discussed above. Amplifier B2 is configured in a noninverting gain of 2 configuration with the bottom of the gain resistor R4 tied to the Y output. The output of amplifier B2 thus results in the color-difference output B-Y.

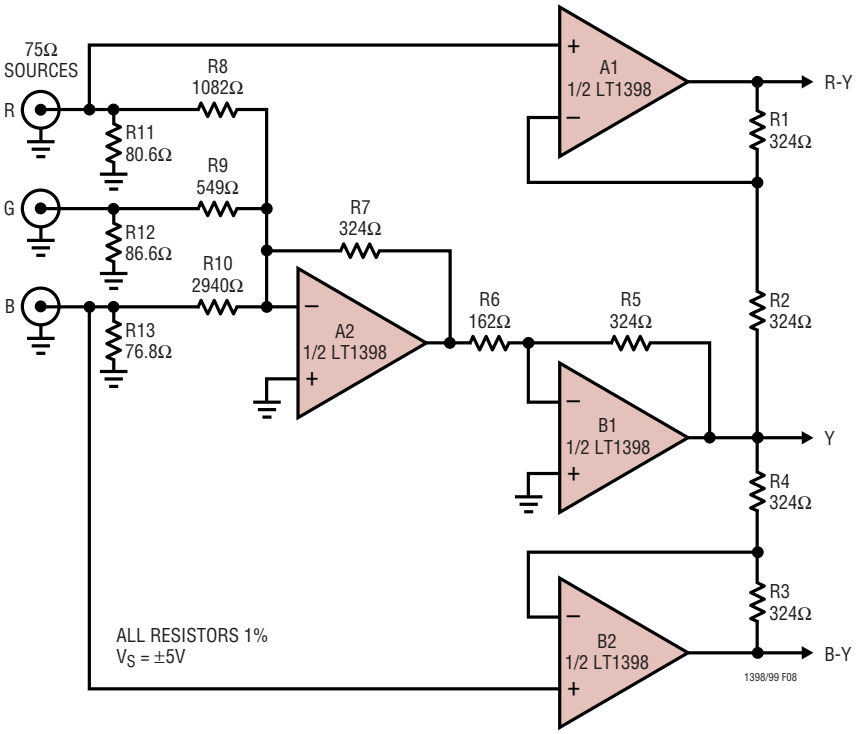

Figure 8. Buffered RGB to Color-Difference Matrix

APPLICATIONS INFORMATION

The G input also arrives via 75Ω coax and adds its contribution to the Y signal via a 549Ω resistor R9, which is tied to the inverting input of amplifier A2. There is also an 86.6Ω termination resistor R12, which yields a 75Ω termination when considered in parallel with R9. Using superposition, it is straightforward to determine the output of amplifier A2. Although inverted, it sums the R, G and B signals in the standard proportions of 0.3R, 0.59G and 0.11B that are used to create the Y signal. Amplifier B1 then inverts and amplifies the signal by 2, resulting in the Y output.

Buffered Color-Difference to RGB Matrix

The LT1399 can be used to create buffered RGB outputs from color-difference signals (Figure 9). The R output is a back-terminated 75Ω signal created using resistor R5 and LT1399 amplifier A1 configured for a gain of +2 via 324Ω resistors R3 and R4. The noninverting input of amplifier A1 is connected via 1k resistors R1 and R2 to the Y and R-Y inputs respectively, resulting in cancellation of the Y signal at the amplifier input. The remaining R signal is then amplified by A1.

The B output is also a back-terminated 75Ω signal created using resistor R16 and amplifier A3 configured for a gain of +2 via 324Ω resistors R14 and R15. The noninverting input of amplifier A3 is connected via 1k resistors R12 and R13 to the Y and B-Y inputs respectively, resulting in cancellation of the Y signal at the amplifier input. The remaining B signal is then amplified by A3.

The G output is the most complicated of the three. It is a weighted sum of the Y, R-Y and B-Y inputs. The Y input is attenuated via resistors R6 and R7 such that amplifier A2's noninverting input sees 0.83Y. Using superposition, we can calculate the positive gain of A2 by assuming that R8 and R9 are grounded. This results in a gain of 2.41 and a contribution at the output of A2 of 2Y. The R-Y input is amplified by A2 with the gain set by resistors R8 and R10, giving an amplification of –1.02. This results in a contribution at the output of A2 of 1.02Y – 1.02R. The B-Y input is amplified by A2 with the gain set by resistors R9 and R10, giving an amplification of –0.37. This results in a contribution at the output of A2 of 0.37Y – 0.37B.

If we now sum the three contributions at the output of A2, we get:

$$A2_{OUT} = 3.40Y - 1.02R - 0.37B$$

It is important to remember though that Y is a weighted sum of R, G and B such that:

$$Y = 0.3R + 0.59G + 0.11B$$

If we substitute for Y at the output of A2 we then get:

$$A2_{OUT} = (1.02R - 1.02R) + 2G + (0.37B - 0.37B) = 2G$$

The back-termination resistor R11 then halves the output of A2 resulting in the G output.

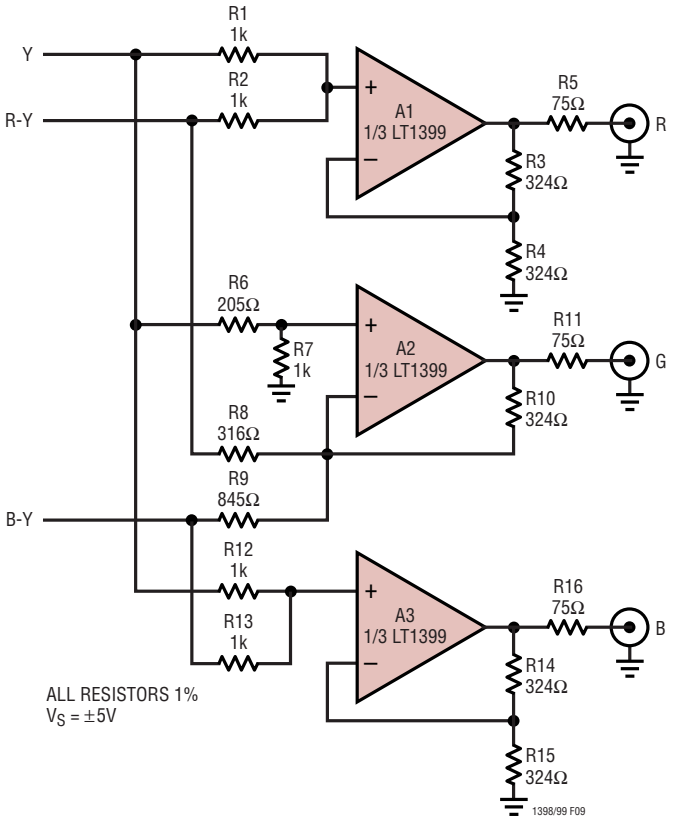

Figure 9. Buffered Color-Difference to RGB Matrix

SIMPLIFIED SCHEMATIC, each amplifier

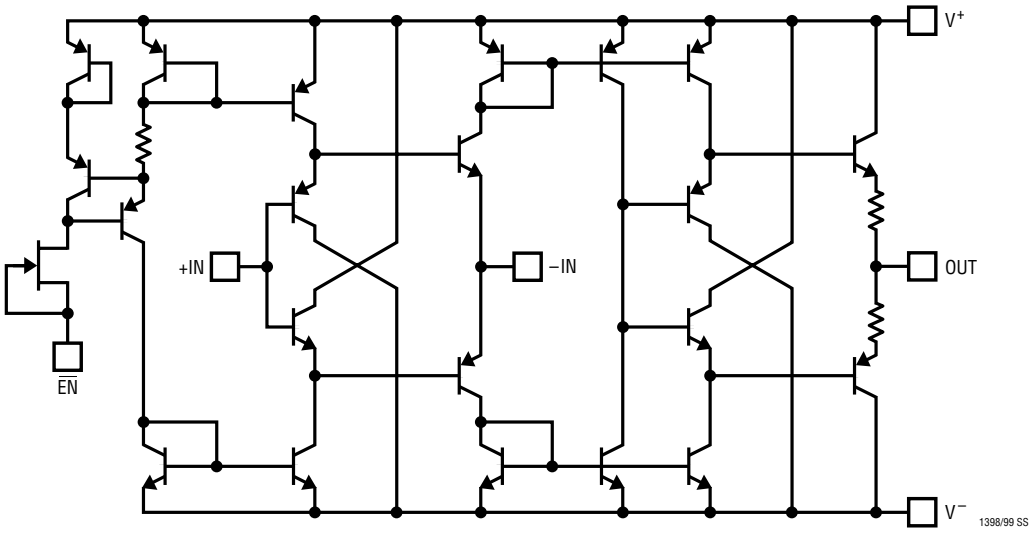

PACKAGE DESCRIPTION

Dimensions in inches (millimeters) unless otherwise noted.

GN Package
16-Lead Plastic SSOP (Narrow 0.150)
(LTC DWG # 05-08-1641)

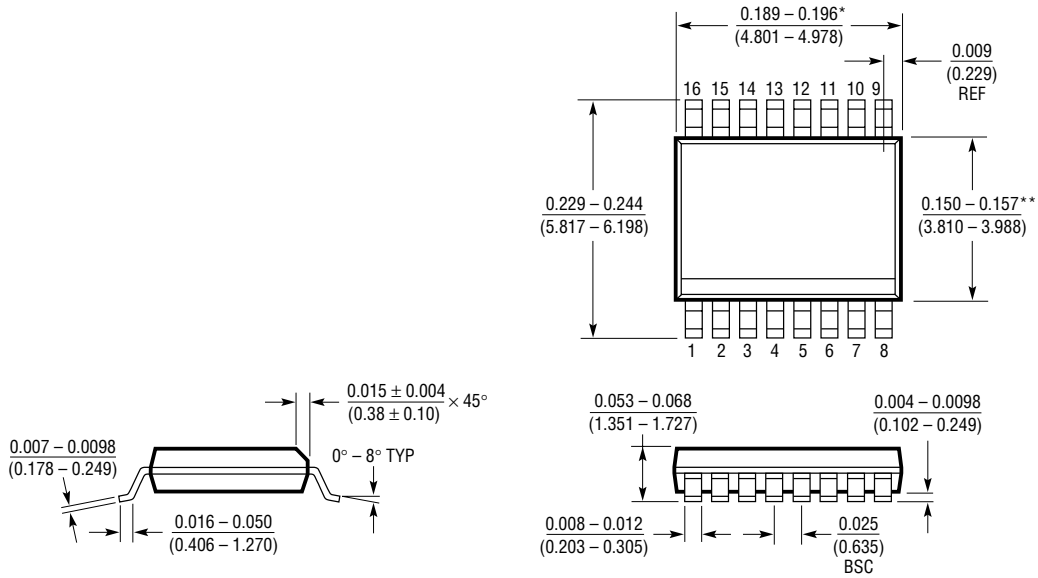

* DIMENSION DOES NOT INCLUDE MOLD FLASH. MOLD FLASH SHALL NOT EXCEED 0.006" (0.152mm) PER SIDE

** DIMENSION DOES NOT INCLUDE INTERLEAD FLASH. INTERLEAD FLASH SHALL NOT EXCEED 0.010" (0.254mm) PER SIDE

S Package
16-Lead Plastic Small Outline (Narrow 0.150)
(LTC DWG # 05-08-1610)

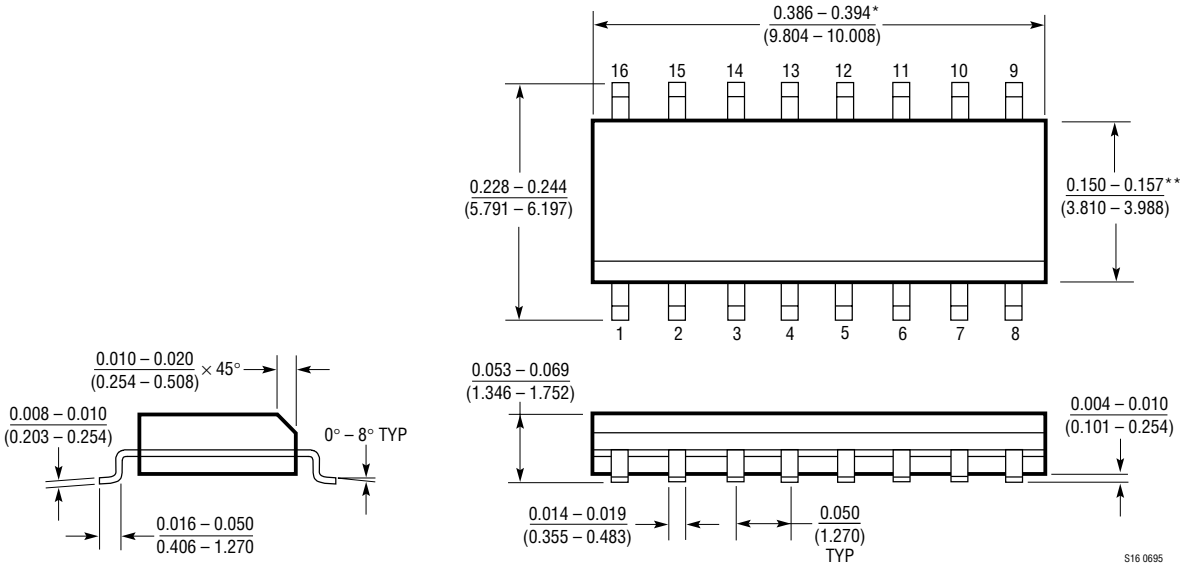

*DIMENSION DOES NOT INCLUDE MOLD FLASH. MOLD FLASH SHALL NOT EXCEED 0.006" (0.152mm) PER SIDE

**DIMENSION DOES NOT INCLUDE INTERLEAD FLASH. INTERLEAD FLASH SHALL NOT EXCEED 0.010" (0.254mm) PER SIDE

Information furnished by Linear Technology Corporation is believed to be accurate and reliable. However, no responsibility is assumed for its use. Linear Technology Corporation makes no representation that the interconnection of its circuits as described herein will not infringe on existing patent rights.

TYPICAL APPLICATION

Single Supply RGB Video Amplifier

The LT1399 can be used with a single supply voltage of 6V or more to drive ground-referenced RGB video. In Figure 10, two 1N4148 diodes D1 and D2 have been placed in series with the output of the LT1399 amplifier A1 but within the feedback loop formed by resistor R8. These diodes effectively level-shift A1's output downward by 2 diodes, allowing the circuit output to swing to ground.

Amplifier A1 is used in a positive gain configuration. The feedback resistor R8 is 324Ω. The gain resistor is created from the parallel combination of R6 and R7, giving a Thevenin equivalent 80.4Ω connected to 3.75V. This gives an AC gain of +5 from the noninverting input of amplifier A1 to the cathode of D2. However, the video input is also attenuated before arriving at A1's positive input. Assuming a 75Ω source impedance for the signal driving V_{IN}, the Thevenin equivalent signal arriving at A1's positive input is 3V + 0.4V_{IN}, with a source impedance of 714Ω. The combination of these two inputs gives an output at the cathode of D2 of 2 • V_{IN} with no additional DC offset. The 75Ω back termination resistor R9 halves the signal again such that V_{OUT} equals a buffered version of V_{IN}.

It is important to note that the 4.7µF capacitor C1 has been added to provide enough current to maintain the voltage drop across diodes D1 and D2 when the circuit output drops low enough that the diodes might otherwise reverse bias. This means that this circuit works fine for continuous video input, but will require that C1 charge up after a period of inactivity at the input.

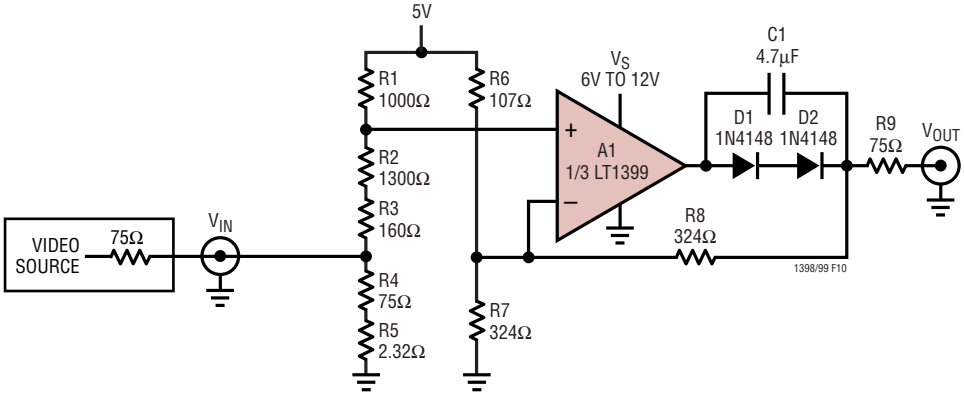

Figure 10. Single Supply RGB Video Amplifier (1 of 3 Channels)

RELATED PARTS

PART NUMBER	DESCRIPTION	COMMENTS
LT1203/LT1205	150MHz Video Multiplexers	2:1 and Dual 2:1 MUXs with 25ns Switch Time
LT1204	4-Input Video MUX with Current Feedback Amplifier	Cascadable Enable 64:1 Multiplexing
LT1227	140MHz Current Feedback Amplifier	1100V/µs Slew Rate, Shutdown Mode
LT1252/LT1253/LT1254	Low Cost Video Amplifiers	Single, Dual and Quad Current Feedback Amplifiers
LT1259/LT1260	Dual/Triple Current Feedback Amplifier	130MHz Bandwidth, 0.1dB Flatness >30MHz
LT1395/LT1396/LT1397	Single/Dual/Quad Current Feedback Amplifiers	400MHz Bandwidth, 0.1dB Flatness >100MHz
LT1675/LT1675-1	Triple/Single 2:1 Buffered Video Mulitplexer	2.5ns Switching Time, 250MHz Bandwidth
LT1806/LT1807	Single/Dual 325MHz Rail-to-Rail In/Out Op Amp	Low Distortion, Low Noise
LT1809/LT1810	Single/Dual 180MHz Rail-to-Rail In/Out Op Amp	350V/µs, Low Distortion

sn13989 13989fas

Linear Technology Corporation
1630 McCarthy Blvd., Milpitas, CA 95035-7417
(408)432-1900 • FAX: (408) 434-0507 • www.linear-tech.com
LT/TP 0501 2K REV A • PRINTED IN USA
© LINEAR TECHNOLOGY CORPORATION 1998