Resistor Wirewound Chassis Mount
RWC Series

Key Features

- Resistances from 0.005 to 250kOhms
- Tolerance to ± 0.01%
- High Temperature: -55ºC to +275ºC
- Low TCR: ± 20ppm/ ºC
- Power Rating 5 to 300 Watts
- Excellent Pulse Handling
- Non-Inductive windings available
- Four Terminal Versions Available (Call Factory)

Applications

- Motor Control
- Braking Systems
- Welding
- X-Ray

Product Summary

PRODUCT SERIES (RWC)	RESISTANCE RANGE (Ω) [1]	POWER RATING (W @ 25ºC)			DIELECTRIC STRENGTH	TEMPERATURE COEFFICIENT	TEMPERATURE RANGE
		FREE AIR	COMMERCIAL	MIL			
G1	0.01 to 22K	4.5	7.5 [a]	5 [a]	1500 VAC	◆ >10Ω: ± 20ppm/ºC ◆ 1Ω to 10Ω: ± 50ppm/ºC ◆ <1Ω: Call Factory	- 55ºC to + 275ºC
G2	0.01 to 47K	7.5	12.5 [a]	10 [a]	1500 VAC		
G3	0.01 to 90K	12	25 [b]	20 [b]	2500 VAC		
G4	0.01 to 250K	20	50 [c]	30 [c]	3500 VAC		

TOLERANCE: ± 0.01 to ± 10% (1% Standard)

[1] For non-inductive windings, divide maximum resistance by 2

[a] Heatsink required: 0.040 [1.0] Aluminum Plate, 129 in² [832 cm²] or equiv.

[b] Heatsink required: 0.040 [1.0] Aluminum Plate, 167 in² [1077 cm²] or equiv.

[c] Heatsink required: 0.059 [1.5] Aluminum Plate, 291 in² [1877 cm²] or equiv.

[d] Heatsink required: 0.125 [3.2] Aluminum Plate, 294in² [1896cm²] or equiv.

[e] Heatsink required: 0.125 [3.2] Aluminum Plate, 895 in² [5780 cm²] or equiv.

Available Options *(Consult Factory)*

- Special Testing Requirements
- Special Pulse Requirements

How to Order

RWC	N	G1	U	003K8	F	S
RESISTOR WIRE-WOUND CHASSIS MOUNT	WINDINGS	PACKAGE CODE, WATTS (COMMERCIAL), RESISTANCE	TEMPERATURE COEFFICIENT OF RESISTANCE (TCR)	RESISTANCE	TOLERANCE	PACKING
	S = Standard N = Non-Inductive	G1, 7.5W, [0.01 to 22k]Ω G2, 12.5W, [0.01 to 47k]Ω G3, 25.0W, [0.01 to 90k]Ω G4, 50.0W, [0.01 to 250k]Ω	U = ± 20ppm/°C Q = ± 50ppm/°C Z = Special	038R0 = 38Ω 003K8 = 3.8KΩ 038K0 = 38.0KΩ 380K0 = 380.0KΩ 003M8 = 3.8MΩ Letter denotes decimal place. R = decimal., "K" 10^3, "M" 10^6 Remaining 4 digits are significant or placeholders.	T= ± 0.01% Q= ± 0.02% A= ± 0.05% B= ± 0.1% F= ± 1.0% J= ± 5.0% K= ± 10.0%	S = Bulk

For Tin/Lead coated leads, add "- Pb" to part number.
Standard Termination Finish: Matte Tin (Sn)
Example P/N: RWCNG1U003K8FS is Resistor Wirewound Chassis Mount, Non-Inductive, 7.5W, ±20ppm/ºC, 3.8KΩ, ±1.0%, bulk

Resistor Wirewound Chassis Mount
RWC Series

Mechanical Characteristics

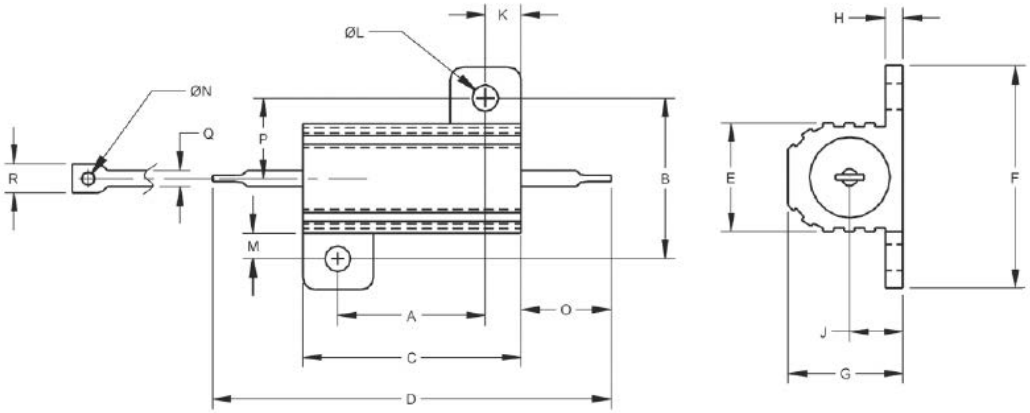

Package Code		G1	G2	G3	G4
Dimensions Inches [mm]	**A** (Tolerances) ±0.005 [±0.13 mm]	0.444 [11.28]	0.562 [14.27]	0.719 [18.26]	1.563 [39.70]
	B (Tolerances) ±0.005 [±0.13 mm]	0.490 [12.45]	0.625 [15.88]	0.781 [19.84]	0.844 [21.44]
	C (Tolerances) ±0.031 [±0.79 mm]	0.600 [15.24]	0.750 [19.05]	1.062 [26.97]	1.968 [49.99]
	D (Tolerances) ±0.062 [±1.57 mm]	1.125 [28.58]	1.320 [33.53]	1.870 [47.50]	2.760 [70.10]
	E (Tolerances) ±0.015 [±0.38 mm]	0.334 [8.48]	0.430 [10.92]	0.530 [13.46]	0.615 [15.62]
	F (Tolerances) ±0.015 [±0.38 mm]	0.646 [16.41]	0.800 [20.32]	1.080 [27.43]	1.140 [28.96]
	G (Tolerances) ±0.015 [±0.38 mm]	0.320 [8.13]	0.400 [10.16]	0.560 [14.22]	0.615 [15.62]
	H (Tolerances) ±0.010 [±0.25 mm]	0.065 [1.65]	0.075 [1.91]	0.085 [2.16]	0.085 [2.16]
	J (Tolerances) ±0.010 [±0.25 mm]	0.140 [3.56]	0.190 [4.83]	0.260 [6.60]	0.300 [7.62]
	K (Tolerances) ±0.010 [±0.25 mm]	0.078 [1.98]	0.093 [2.36]	0.172 [4.37]	0.196 [4.98]
	L (Tolerances) ±0.005 [±0.13 mm]	0.093 [2.36]	0.093 [2.36]	0.125 [3.18]	0.125 [3.18]
	M (Tolerances) ±0.015 [±0.38 mm]	0.078 [1.98]	0.102 [2.60]	0.125 [3.18]	0.125 [3.18]
	N (Tolerances) ±0.006 [±0.15 mm]	0.050 [1.27]	0.080 [2.03]	0.080 [2.03]	0.080 [2.03]
	O (Tolerances) ±0.062 [±1.57 mm]	0.266 [6.76]	0.312 [7.93]	0.438 [11.13]	0.438 [11.13]
	P (Tolerances) ±0.031 [±0.79 mm]	0.245 [6.22]	0.312 [7.92]	0.391 [9.93]	0.422 [10.72]
	Q (Tolerances) ±0.002 [±0.05 mm]	0.051 [1.30]	0.098 [2.49]	0.098 [2.49]	0.098 [2.49]
	R (Tolerances) ±0.031 [±0.79 mm]	0.085 [2.16]	0.160 [4.06]	0.185 [4.70]	0.185 [4.70]
MIL-R-39009 / MIL-R-18546		RER-60 / RE-60	RER-65 / RE-65	RER-70 / RE-70	RER-75 / RE-75

Resistor Wirewound Chassis Mount
RWC Series

Environmental Performance

Environmental Performance (MIL-STD 202)	ΔR
Vibration	± 0.1 % + 0.05 Ω
Load Life	± 1% + 0.05 Ω
Moisture Resistance	± 0.2 % + 0.05 Ω
Dielectric	± 0.2 % + 0.05 Ω
Storage	± 0.2 % + 0.05 Ω
Shock	± 0.1 % + 0.05 Ω
Thermal Shock	± 0.2 % + 0.05 Ω
5X Overload (5s)	± 0.2 % + 0.05 Ω

CONSTRUCTION NOTES:

- Centerless ground ceramic core
- Tinned copper or copperweld leads
- All welded terminations
- High Temperature epoxy molding compound
- Anodized aluminum housing

Moisture Sensitivity Level: MSL-1

Power Derating Curve

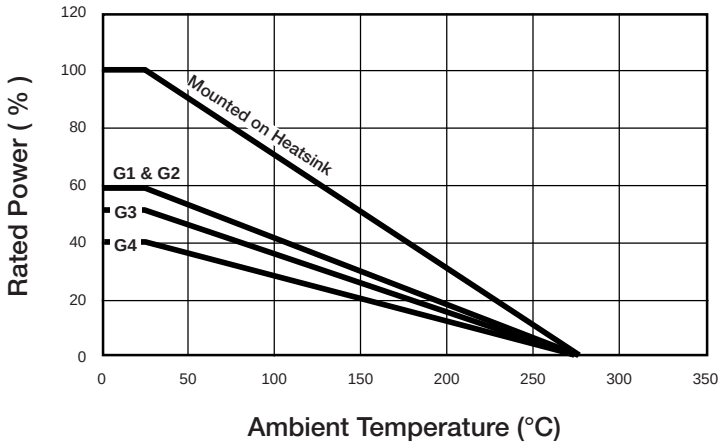

Free-Air Derating:
G1, G2, G3, G4

This datasheet is subject to change without notice.