# Resistor Wirewound Chassis Mount
# RWC Series

## Key Features

- Resistances from 0.005 to 250kOhms
- Tolerance to ± 0.01%
- High Temperature: -55ºC to +275ºC
- Low TCR: ± 20ppm/ ºC
- Power Rating 5 to 300 Watts
- Excellent Pulse Handling
- Non-Inductive windings available
- Four Terminal Versions Available (Call Factory)

## Applications

- Motor Control
- Braking Systems
- Welding
- X-Ray

## Product Summary

| PRODUCT SERIES (RWC) | RESISTANCE RANGE (Ω) [1] | POWER RATING (W @ 25ºC) | | | DIELECTRIC STRENGTH | TEMPERATURE COEFFICIENT | TEMPERATURE RANGE |
|---|---|---|---|---|---|---|---|
| | | FREE AIR | COMMERCIAL | MIL | | | |
| G1 | 0.01 to 22K | 4.5 | 7.5 [a] | 5 [a] | 1500 VAC | ◆ >10Ω: ± 20ppm/ºC<br>◆ 1Ω to 10Ω: ± 50ppm/ºC<br>◆ <1Ω: Call Factory | - 55ºC to + 275ºC |
| G2 | 0.01 to 47K | 7.5 | 12.5 [a] | 10 [a] | 1500 VAC | | |
| G3 | 0.01 to 90K | 12 | 25 [b] | 20 [b] | 2500 VAC | | |
| G4 | 0.01 to 250K | 20 | 50 [c] | 30 [c] | 3500 VAC | | |

**TOLERANCE**: ± 0.01 to ± 10% (1% Standard)

[1] For non-inductive windings, divide maximum resistance by 2

[a] Heatsink required: 0.040 [1.0] Aluminum Plate, 129 in² [832 cm²] or equiv.

[b] Heatsink required: 0.040 [1.0] Aluminum Plate, 167 in² [1077 cm²] or equiv.

[c] Heatsink required: 0.059 [1.5] Aluminum Plate, 291 in² [1877 cm²] or equiv.

[d] Heatsink required: 0.125 [3.2] Aluminum Plate, 294in² [1896cm²] or equiv.

[e] Heatsink required: 0.125 [3.2] Aluminum Plate, 895 in² [5780 cm²] or equiv.

## Available Options *(Consult Factory)*

- Special Testing Requirements
- Special Pulse Requirements

## How to Order

| RWC | N | G1 | U | 003K8 | F | S |
|---|---|---|---|---|---|---|
| RESISTOR WIRE-WOUND CHASSIS MOUNT | WINDINGS | PACKAGE CODE, WATTS (COMMERCIAL), RESISTANCE | TEMPERATURE COEFFICIENT OF RESISTANCE (TCR) | RESISTANCE | TOLERANCE | PACKING |
| | S = Standard<br>N = Non-Inductive | G1, 7.5W, [0.01 to 22k]Ω<br>G2, 12.5W, [0.01 to 47k]Ω<br>G3, 25.0W, [0.01 to 90k]Ω<br>G4, 50.0W, [0.01 to 250k]Ω | U = ± 20ppm/°C<br>Q = ± 50ppm/°C<br>Z = Special | 038R0 = 38Ω<br>003K8 = 3.8KΩ<br>038K0 = 38.0KΩ<br>380K0 = 380.0KΩ<br>003M8 = 3.8MΩ<br>Letter denotes decimal place.<br>R = decimal., "K" $10^3$, "M" $10^6$<br>Remaining 4 digits are significant or placeholders. | T= ± 0.01%<br>Q= ± 0.02%<br>A= ± 0.05%<br>B= ± 0.1%<br>F= ± 1.0%<br>J= ± 5.0%<br>K= ± 10.0% | S = Bulk |

**For Tin/Lead coated leads, add "- Pb" to part number.**
Standard Termination Finish: Matte Tin (Sn)
Example P/N: RWCNG1U003K8FS is Resistor Wirewound Chassis Mount, Non-Inductive, 7.5W, ±20ppm/ºC, 3.8KΩ, ±1.0%, bulk

# Resistor Wirewound Chassis Mount
# RWC Series

## Mechanical Characteristics

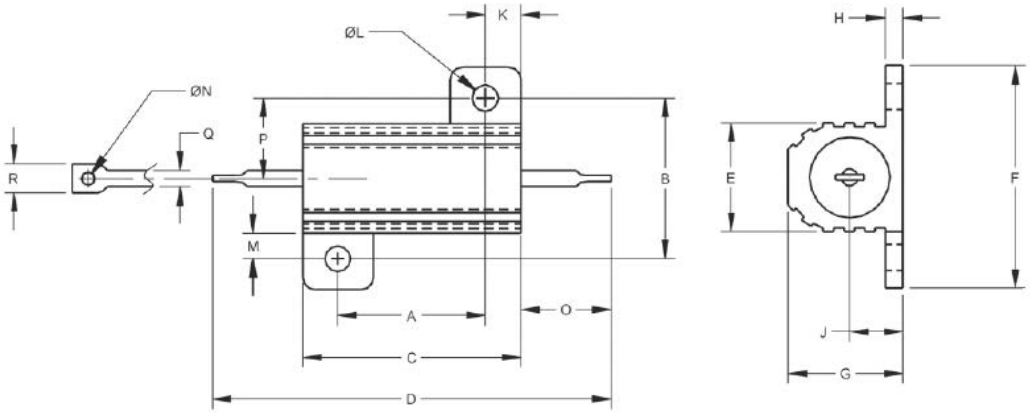


| Package Code | | G1 | G2 | G3 | G4 |
|---|---|---|---|---|---|
| Dimensions Inches [mm] | **A** (Tolerances) ±0.005 [±0.13 mm] | 0.444 [11.28] | 0.562 [14.27] | 0.719 [18.26] | 1.563 [39.70] |
| | **B** (Tolerances) ±0.005 [±0.13 mm] | 0.490 [12.45] | 0.625 [15.88] | 0.781 [19.84] | 0.844 [21.44] |
| | **C** (Tolerances) ±0.031 [±0.79 mm] | 0.600 [15.24] | 0.750 [19.05] | 1.062 [26.97] | 1.968 [49.99] |
| | **D** (Tolerances) ±0.062 [±1.57 mm] | 1.125 [28.58] | 1.320 [33.53] | 1.870 [47.50] | 2.760 [70.10] |
| | **E** (Tolerances) ±0.015 [±0.38 mm] | 0.334 [8.48] | 0.430 [10.92] | 0.530 [13.46] | 0.615 [15.62] |
| | **F** (Tolerances) ±0.015 [±0.38 mm] | 0.646 [16.41] | 0.800 [20.32] | 1.080 [27.43] | 1.140 [28.96] |
| | **G** (Tolerances) ±0.015 [±0.38 mm] | 0.320 [8.13] | 0.400 [10.16] | 0.560 [14.22] | 0.615 [15.62] |
| | **H** (Tolerances) ±0.010 [±0.25 mm] | 0.065 [1.65] | 0.075 [1.91] | 0.085 [2.16] | 0.085 [2.16] |
| | **J** (Tolerances) ±0.010 [±0.25 mm] | 0.140 [3.56] | 0.190 [4.83] | 0.260 [6.60] | 0.300 [7.62] |
| | **K** (Tolerances) ±0.010 [±0.25 mm] | 0.078 [1.98] | 0.093 [2.36] | 0.172 [4.37] | 0.196 [4.98] |
| | **L** (Tolerances) ±0.005 [±0.13 mm] | 0.093 [2.36] | 0.093 [2.36] | 0.125 [3.18] | 0.125 [3.18] |
| | **M** (Tolerances) ±0.015 [±0.38 mm] | 0.078 [1.98] | 0.102 [2.60] | 0.125 [3.18] | 0.125 [3.18] |
| | **N** (Tolerances) ±0.006 [±0.15 mm] | 0.050 [1.27] | 0.080 [2.03] | 0.080 [2.03] | 0.080 [2.03] |
| | **O** (Tolerances) ±0.062 [±1.57 mm] | 0.266 [6.76] | 0.312 [7.93] | 0.438 [11.13] | 0.438 [11.13] |
| | **P** (Tolerances) ±0.031 [±0.79 mm] | 0.245 [6.22] | 0.312 [7.92] | 0.391 [9.93] | 0.422 [10.72] |
| | **Q** (Tolerances) ±0.002 [±0.05 mm] | 0.051 [1.30] | 0.098 [2.49] | 0.098 [2.49] | 0.098 [2.49] |
| | **R** (Tolerances) ±0.031 [±0.79 mm] | 0.085 [2.16] | 0.160 [4.06] | 0.185 [4.70] | 0.185 [4.70] |
| **MIL-R-39009 / MIL-R-18546** | | RER-60 / RE-60 | RER-65 / RE-65 | RER-70 / RE-70 | RER-75 / RE-75 |

# Resistor Wirewound Chassis Mount
# RWC Series

## Environmental Performance

| Environmental Performance (MIL-STD 202) | ΔR |
|---|---|
| **Vibration** | ± 0.1 % + 0.05 Ω |
| **Load Life** | ± 1% + 0.05 Ω |
| **Moisture Resistance** | ± 0.2 % + 0.05 Ω |
| **Dielectric** | ± 0.2 % + 0.05 Ω |
| **Storage** | ± 0.2 % + 0.05 Ω |
| **Shock** | ± 0.1 % + 0.05 Ω |
| **Thermal Shock** | ± 0.2 % + 0.05 Ω |
| **5X Overload (5s)** | ± 0.2 % + 0.05 Ω |

CONSTRUCTION NOTES:

- Centerless ground ceramic core
- Tinned copper or copperweld leads
- All welded terminations
- High Temperature epoxy molding compound
- Anodized aluminum housing

Moisture Sensitivity Level: MSL-1

**Power Derating Curve**

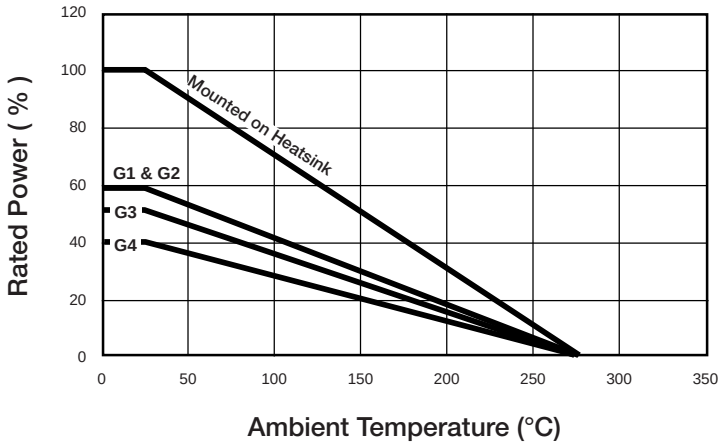


Free-Air Derating:
G1, G2, G3, G4

This datasheet is subject to change without notice.