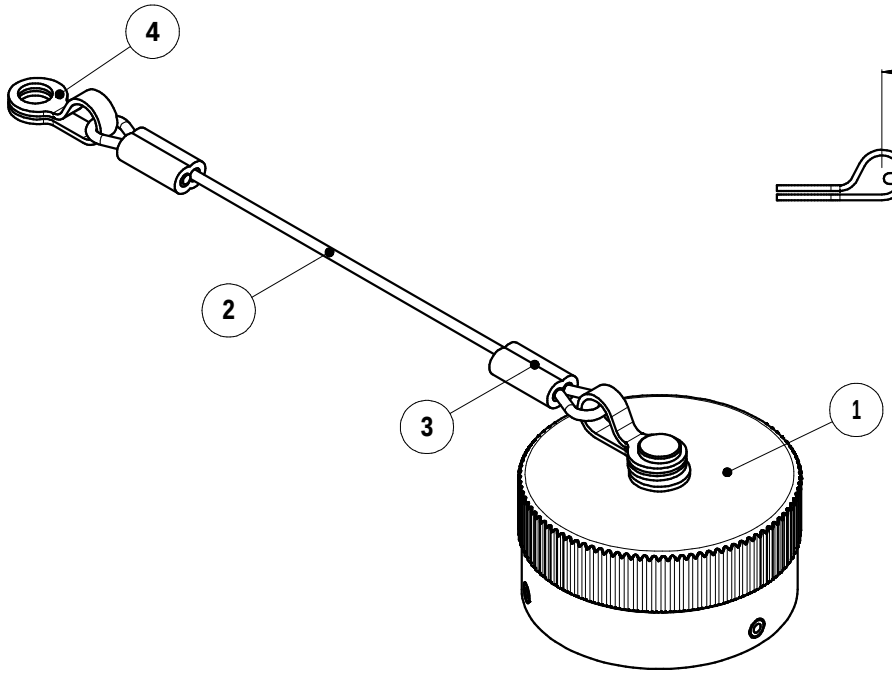

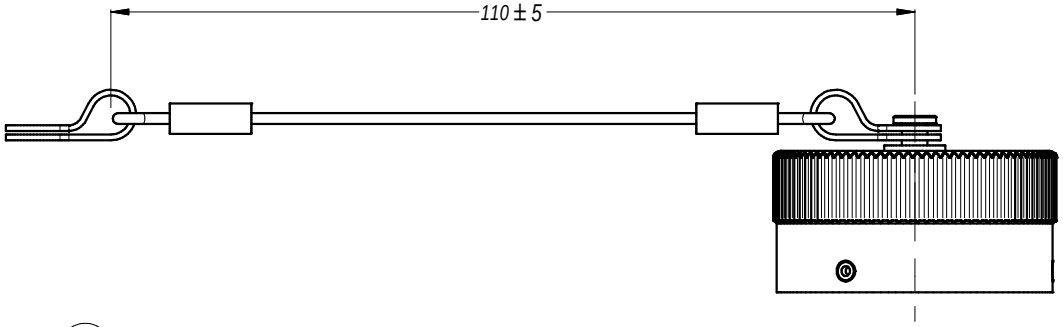

P/N	TO SUIT CONNECTOR
MP-25043-13S	MP-4102-13P
MP-25043-19S	MP-4102-19P
MP-25043-25S	MP-4102-25P
MP-25043-37S	MP-4102-37P
MP-25043-54S	MP-4102-54P
MP-25043-85S	MP-4102-85P
MP-25043-150S	MP-4102-150P

ITEM	DESCRIPTION	QTY
4	LUG	1
3	CRIMP SWAGE	2
2	LANYARD PVC COATED 1.5mm OD	1
1	DUST CAP FOR PLUG MP-4102	1

Parts List

UNLESS OTHERWISE SPECIFIED TOLERANCE TO BE

LINEAR	ANGULAR
X ± N/A	X' ± 1
X,X ± .2	X.X' ± 30'
X,XX ± .05	X.X'X " ± 15'

BREAK ALL SHARP EDGES AND REMOVE ALL BURRS

DO NOT SCALE

DIMENSIONS IN MILIMETRES

THIRD ANGLE PROJECTION

THIS DOCUMENT IS THE PROPERTY OF AMPHENOL AUSTRALIA PTY. LTD. . NO PART THEREOF MAY BE REPRODUCED AND USED WITHOUT THE PRIOR WRITTEN CONSENT OF THE OWNER

CAD FILE: 50250025432110	DRN: A.O	DATE: 09/04/08	
MATL: -----	CKD: B.Z	DATE: 09/04/08	
FINISH: -----	APP'D: P.M	DATE: 09/04/08	
SCALE: 1:1	PART No: MP-25043-**S	SIZE: A4	

REV	DESCRIPTION	BY	DATE	CHG/No
0	FIRST ISSUE	A.O	09/04/08	8740

REVISION HISTORY

TITLE: DUST CAP FOR MP-4102

Amphenol

Amphenol Australia Pty.Ltd, 2 Fiveways Blvd, Keysborough, Vic3173

DRAWING NO. 50250025-432-1

SHEET 1/1