THIS DRAWING IS UNPUBLISHED. RELEASED FOR PUBLICATION - ,- .
© COPYRIGHT - BY TYCO ELECTRONICS CORPORATION. ALL INTERNATIONAL RIGHTS RESERVED.

LOC	DIST
—	—

REVISIONS

P	LTR	DESCRIPTION	DATE	DWN	APVD
	A	REV PER ECO 09-013463	6-19-09	CT	RL

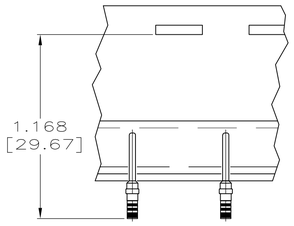

TAPE MOUNTED
PART NO 1218371-2 ONLY
SCALE 2:1

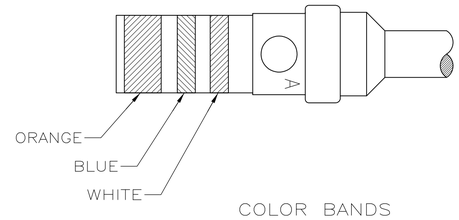

COLOR BANDS
FOR 1218371-1 & -2 ONLY

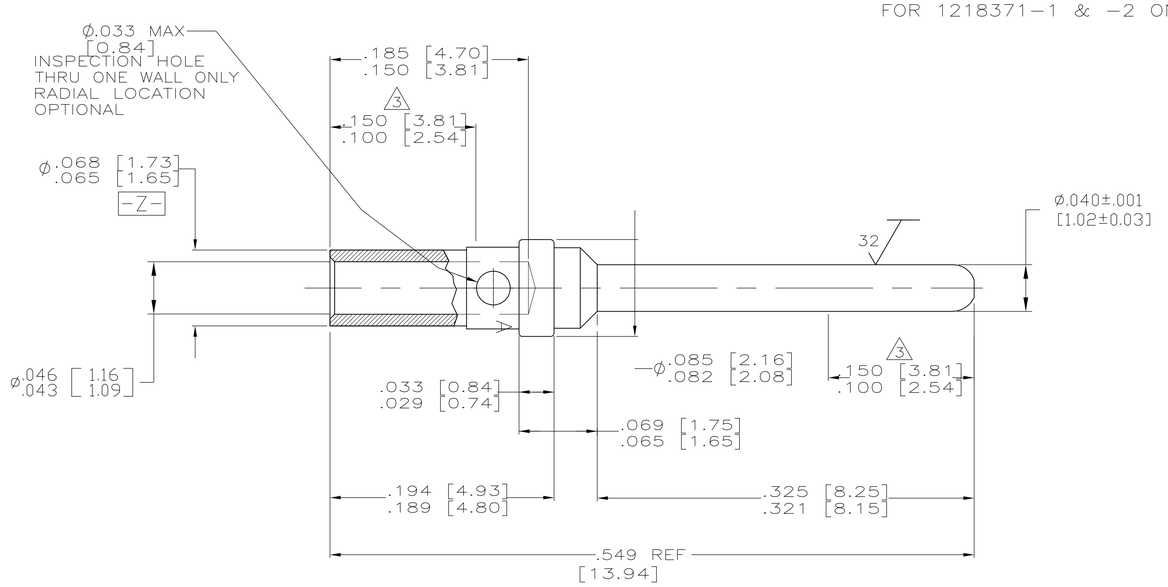

1. FINISH: GOLD PLATED PER MIL-G-45204, TYPE II, OVER NICKEL PER QQ-N-290.
2. FINISH: GOLD PLATED PER MIL-G-45204, TYPE II, OVER COPPER PER MIL-C-14550, CLASS 4.
3. POINT OF PLATING THICKNESS MEASUREMENT. (2 PLC)
4. ALL DIAMETERS [⌖ .004 Z] UNLESS OTHERWISE SPECIFIED.
5. THIS PART COMPLIES WITH MIL-C-39029/64 AND M24308/11-1.
6. ALL SURFACES HAVE A63 OR BETTER FINISH, UNLESS OTHERWISE SPECIFIED.

	REMARKS	FINISH	PART NUMBER
	WITHOUT COLOR CODE	2	1218371-3
SUPERSEDED BY 205089-2	CONTACTS ON TAPE	1	1218371-2
SUPERSEDED BY 205089-1	AS SHOWN	1	1218371-1

THIS DRAWING IS A CONTROLLED DOCUMENT.

DIMENSIONS: INCHES

TOLERANCES UNLESS OTHERWISE SPECIFIED:
0 PLC ± –
1 PLC ± –
2 PLC ± –
3 PLC ± –
4 PLC ± –
ANGLES ± –

MATERIAL –
FINISH –

DWN C.C.THOMAS 1-25-99
CHK R.GROSS 1-25-99
APVD R.GROSS 1-25-99
PRODUCT SPEC —
APPLICATION SPEC —
WEIGHT —

Tyco Electronics
Tyco Electronics Corporation
Harrisburg, PA 17105-3608

NAME #20 PIN,CRIMP,AMPLIMITE

SIZE	CAGE CODE	DRAWING NO	RESTRICTED TO
A1	00779	C-1218371	—

CUSTOMER DRAWING | SCALE 15:1 | SHEET 1 OF 1 | REV A

4805 (1/08)

19JUN2009 us016412 H:\docmod\1218371_1_c.dwg