Series 801 Mighty Mouse Double-Start ACME Threads Metal Protective Cover Ordering Information

667-217 and 667-218

Protect Connectors From Damage Machined aluminum covers have rubber gaskets for a watertight fit.

Stainless Steel Fittings and Rings Choose small diameter eye fittings for panel attachment. Larger rings fit under the jam nut or over cable jackets. Split rings can be installed on fully assembled cables.

Polyurethane-Coated SST Wire Rope offers high strength, excellent abrasion resistance and good flexibility. Or, choose Teflon® jacket for high temperature exposure.

Braided Nylon Rope provides excellent flexibility and good abrasion resistance, and can be ordered with slip knot fittings for easy installation on any size cable.

HOW TO ORDER

Sample Part Number

667-217	-M	-G	9	04	-6
Series	**Shell Material / Finish**	**Attachment Type**	**Shell Size**	**Attachment Code**	**Attachment Length in Inches**
 667-217 Protective Cover for use with Series 801 Plugs 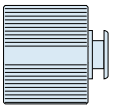 **667-218** Protective Cover for use with Series 801 Receptacles	**C** Aluminum / Black Anodize (Non-Conductive) RoHS Compliant **M** Aluminum / Electroless Nickel RoHS Compliant **NF** Aluminum / Cadmium with Olive Drab Chromate **ZN** Aluminum / Zinc-Nickel with Olive Drab Chromate **ZNU** Aluminum / Zinc-Nickel with Black Chromate **MT** Aluminum / Nickel-PTFE RoHS Compliant **Z1** Stainless Steel / Passivated RoHS Compliant	**-G** Nylon Rope **-H** SST Wire Rope, Teflon® Jacket **-N** No Attachment **-S** SST Sash Chain **-SK** Nylon Rope With Slip Knot **-T** SST Wire Rope, No Jacket **-U** SST Wire Rope, Polyurethane Jacket "SST" = Stainless Steel	**5** **6** **7** **8** **9** **10** **13** **16** **17** **21**	Omit for attachment Types **N** (No Attachment) and **SK** (Slip Knot) 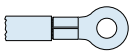 Small Ring **01** – .126 (3.20) I.D. **02** – .145 (3.68) I.D. **04** – .188 (4.78) I.D. **06** – .197 (5.00) I.D. 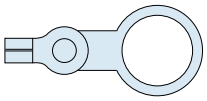 Large Ring **14** – .385 (9.78) I.D. **15** – .445 (11.30) I.D. **16** – .570 (14.48) I.D. **17** – .635 (16.13) I.D. **18** – .695 (17.65) I.D. **19** – .885 (22.48) I.D. **20** – 1.070 (27.17) I.D. **21** – 1.135 (28.83) I.D. **22** – 1.210 (30.73) I.D. **23** – 1.275 (32.39) I.D. **24** – 1.375 (34.94) I.D. 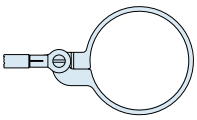 Split Ring **50** – .420 (10.67) I.D. **52** – .480 (12.19) I.D. **54** – .635 (16.13) I.D. **56** – .745 (18.92) I.D. **58** – .885 (22.48) I.D. **60** – 1.010 (25.65) I.D. **64** – 1.125 (28.58) I.D. **68** – 1.345 (34.16) I.D.	Omit for attachment Type **N** (No Attachment) **Example** "-6" equals six inch length

Dimensions in inches (millimeters) and are subject to change without notice.

© 2010 Glenair, Inc.
CAGE Code 06324
Printed in U.S.A.

Series 801 Mighty Mouse Double-Start ACME Threads Metal Protective Cover Dimensions

667-217 and 667-218

D

Attaching a 667-218 Receptacle Cover to a Rear Panel Mounted Jam Nut Receptacle

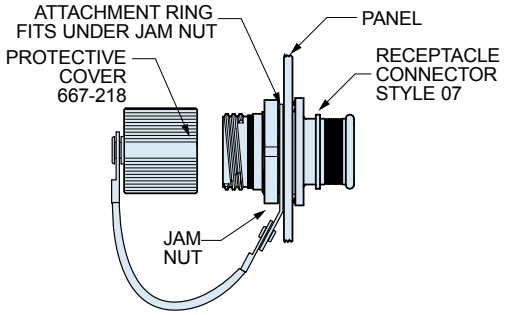

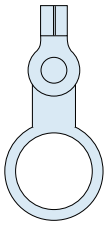

Solid Ring

Dia. Code	Shell Size	Ring I.D. In. ± .010	Ring I.D. mm. ±0.25	Ring O.D. In. ± .015	Ring O.D. mm. ± 0.38
14	5	.385	9.78	.510	12.95
15	6	.445	11.30	.565	14.35
16	7, 8	.570	14.48	.685	17.40
17	9	.635	16.13	.760	19.30
18	10	.695	17.65	.820	20.82
19	13	.885	22.48	1.010	25.65
20	16	1.070	27.17	1.195	30.35
21	17	1.135	28.83	1.250	31.75
24	21	1.375	34.93	1.490	37.85

Attaching a Cover to a Panel With a Screw

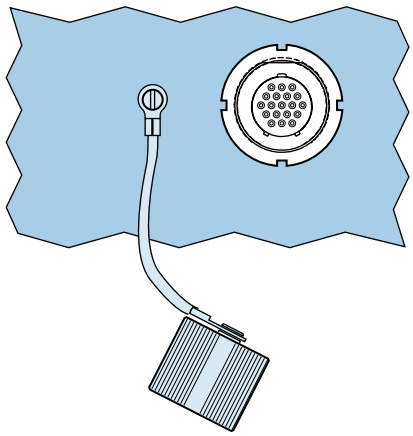

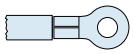

Small Ring for Attaching Receptacle Covers to a Panel with a Screw

Dia. Code	Screw Size	Ring I.D. In. ±.005	Ring I.D. mm. ±0.13	Ring O.D. In. Max.	Ring O.D. mm. Max.
01	#4, M3	.126	3.20	.31	7.9
02	#6	.145	3.68	.31	7.9
04	#8, M4	.188	4.78	.31	7.9
06	#10	.197	5.00	.31	7.9

Attaching a Cover to a Cable Assembly With a Solid Ring

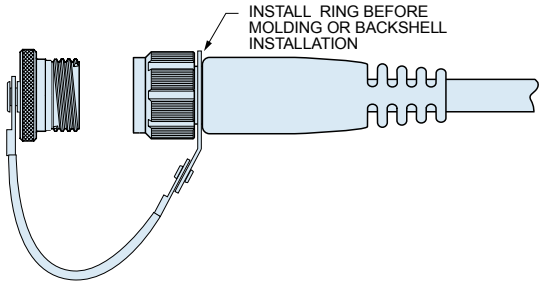

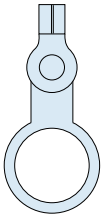

Solid Ring

Dia. Code	Shell Size	Ring I.D. In. ± .010	Ring I.D. mm. ±0.25	Ring O.D. In. ± .015	Ring O.D. mm. ± 0.38
14	5,6	.385	9.78	.510	12.95
15	7	.445	11.30	.565	14.35
16	8, 9	.570	14.48	.685	17.40
18	10, 13	.695	17.65	.820	20.82
20	16, 17	1.070	27.17	1.195	30.35
22	21	1.210	30.73	1.312	33.32

Attaching a Cover to a Cable Using a Split Ring

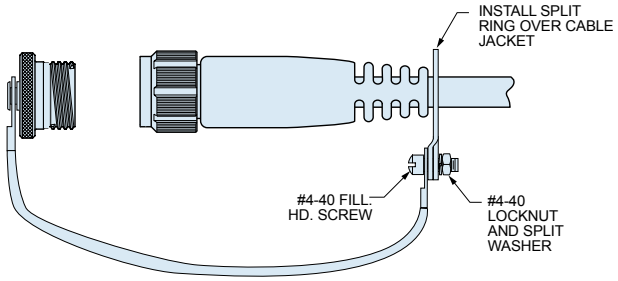

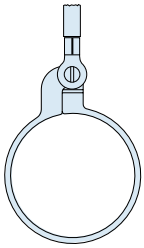

Large Split Ring for Attaching Covers to Cables

Dia. Code	Max. Cable Dia. (in.)	Ring Diameter Min. ID In.	Ring Diameter Min. ID mm.	Ring Diameter Max. OD In.	Ring Diameter Max. OD mm.
50	.410	.420	10.67	.580	14.73
52	.470	.480	12.19	.640	16.26
54	.625	.635	16.13	.796	20.22
56	.735	.745	18.92	.905	22.99
58	.875	.885	22.48	1.046	26.57
60	1.000	1.010	25.65	1.171	29.74
64	1.115	1.125	28.58	1.285	32.64
68	1.335	1.345	34.16	1.505	38.23

Dimensions in inches (millimeters) and are subject to change without notice.

© 2010 Glenair, Inc.
CAGE Code 06324
Printed in U.S.A.

Series 801 Mighty Mouse Double-Start ACME Threads
Metal Protective Cover Dimensions
667-217 and 667-218

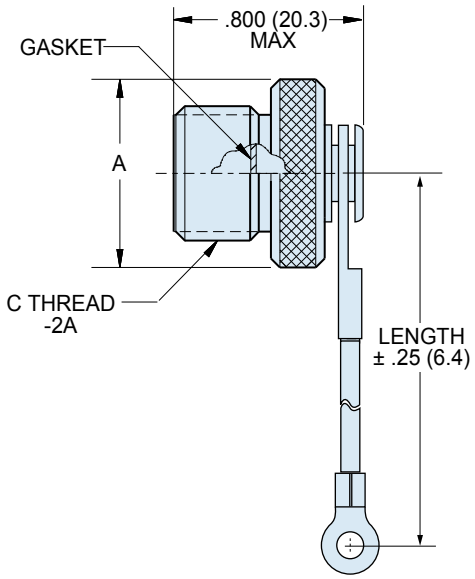

667-217 Plug Cover

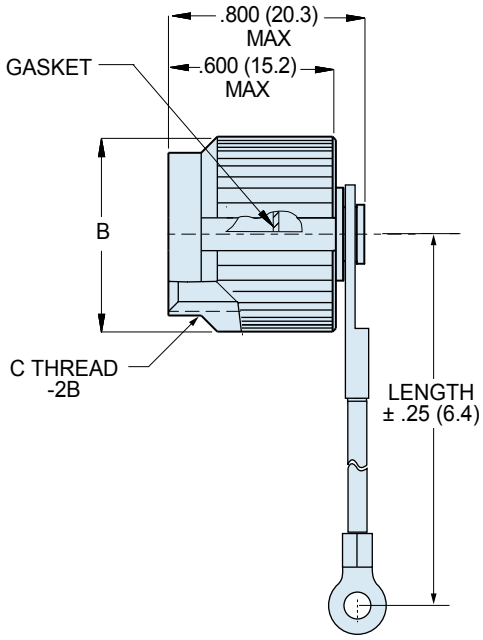

667-218 Receptacle Cover

Shell Size	A Max.		B Max.		C
	In.	mm.	In.	mm.	
5	.465	11.81	.488	12.40	.3125-.05P-1L
6	.525	13.34	.555	14.10	.375-.05P-1L
7	.590	14.99	.615	15.62	.4375-.05P-1L
8	.653	16.59	.675	17.15	.5000-.05-.1L
9	.715	18.16	.840	21.34	.5625-.05P-.1L
10	.778	19.76	.905	22.95	.6250-.05P-1L
13	.965	24.51	.995	25.27	.8125-.1P-.2L
16	1.150	29.21	1.261	32.03	1.000-.1P-.2L
17	1.215	30.86	1.321	33.55	1.062-.1P-.2L
21	1.477	37.52	1.570	39.88	1.3125-.1P-.2L

MATERIALS AND FINISHES	
Cover	Aluminum alloy or stainless steel
Gasket	Silicone rubber
Wire,Hardware	Stainless steel, passivated

LANYARD OPTIONS	
Nylon Rope	-55° to +100°C., black, very flexible, very good abrasion resistance, good resistance to fuels, .120" (3mm) diameter
Polyurethane Coated Wire Rope	Black polyurethane over stainless steel rope, -55° to +125°C., very flexible, excellent abrasion resistance, excellent resistance to fuels, .080" (2mm) diameter
Teflon® Jacketed Wire Rope	Translucent FEP jacket over stainless steel, -55° to +200°C., fair flexibility, good abrasion resistance, .100" diameter
Sash Chain	Stainless steel, #8 chain, .240" (6mm)
Slip Knot (SK) for Attaching Covers to Cable	55° to +100°C., black, very flexible, very good abrasion resistance, good resistance to fuels, .120" (3mm) diameter. Length includes .5" (13mm) diameter loop.

Dimensions in inches (millimeters) and are subject to change without notice.

© 2010 Glenair, Inc.
CAGE Code 06324
Printed in U.S.A.

GLENAIR, INC. • 1211 AIR WAY • GLENDALE, CA 91201-2497 • 818-247-6000 • FAX 818-500-9912
www.glenair.com
E-Mail: sales@glenair.com