ITEM	Q'TY	PART NUMBER	PART DESCRIPTION
1	1	FLPV2-XX	Flexible LIght Pipe 2mm Adapter, Vertical w/ LED, See page 2
2	1	FLP25-XX.X	Flexible Light Pipe Lens Cap Assembly, 2mm

REV.	DESCRIPTION	DATE	APPROVED
A	Engineering Release	09/14/09	T. Y.
B	Replaced 3UWC-0.6K-F with 3UWC1.035C-F	04/26/12	T. Y.
C	Updated Table For Length "L"	11/16/12	T. Y.
D	Updated LED Optical Characteristics	09/15/15	J. C.
E	Updated LED Tables	08/15/18	M. C.
F	Updated LED Tables	11/13/18	M. C.

NOTE: FLPV2-XX ADAPTER SHIPPED NON-ASSEMBLED

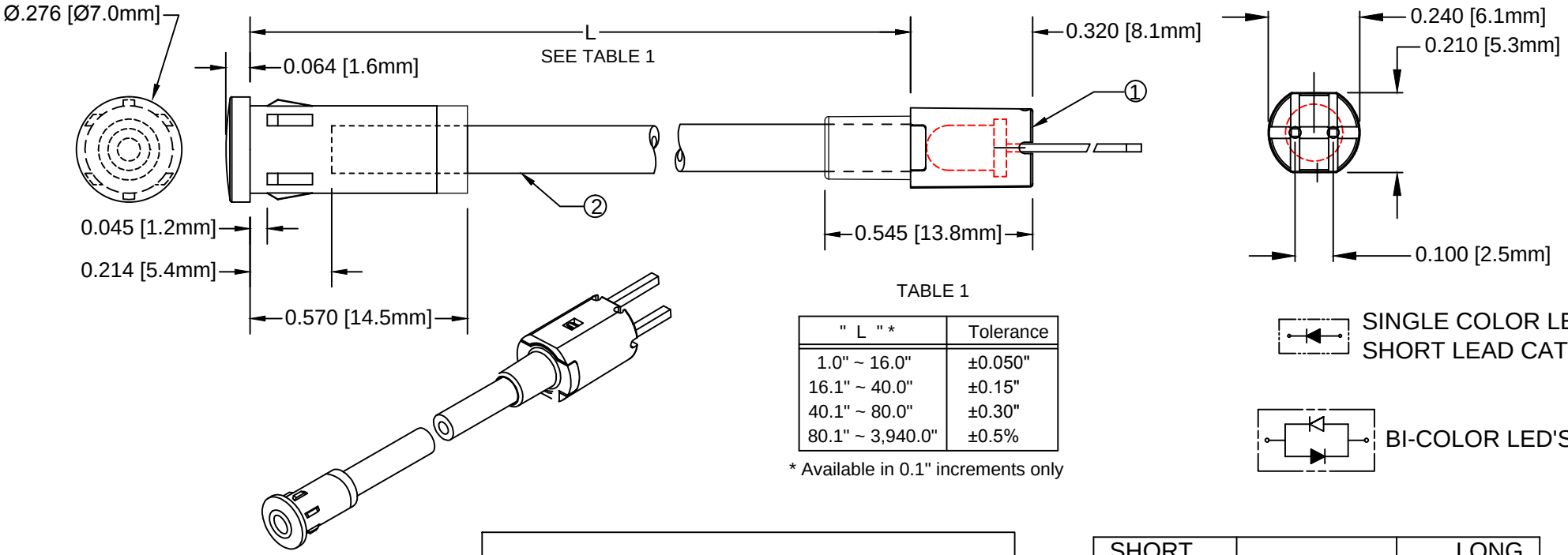

TABLE 1

" L " *	Tolerance
1.0" ~ 16.0"	±0.050"
16.1" ~ 40.0"	±0.15"
40.1" ~ 80.0"	±0.30"
80.1" ~ 3,940.0"	±0.5%

* Available in 0.1" increments only

SINGLE COLOR LED
SHORT LEAD CATHODE

BI-COLOR LED'S

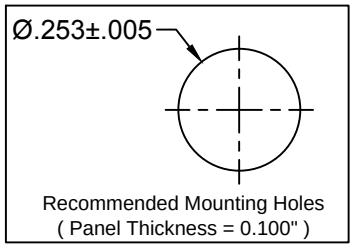

Recommended Mounting Holes
(Panel Thickness = 0.100")

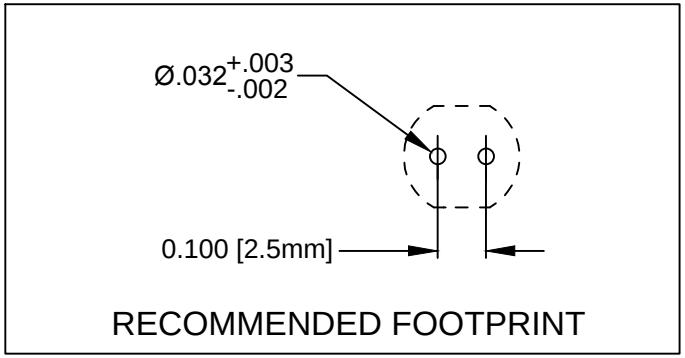

RECOMMENDED FOOTPRINT

SHORT LEAD CATHODE	LED PART NO.	LONG LEAD CATHODE
RED	3xBCC-F	GREEN
YELLOW	3BC-Y/G-F	GREEN

ABSOLUTE MAXIMUM RATINGS (Ta=25°C)

REVERSE VOLTAGE	5V
REVERSE CURRENT	100uA
OPERATING TEMPERATURE RANGE	−25° C – 85° C
STORAGE TEMPERATURE	−30° C – 100° C
LEAD SOLDERING TEMPERATURE(1/16" FROM BODY)	260° C FOR 5 SECONDS

STANDARD TOLERANCE
(UNLESS OTHERWISE SPECIFIED)

DECIMALS		ANGULAR
.X	± .1	X° ± 1°
.XX	± .02	
.XXX	± .010	

BIVAR®
4 THOMAS, IRVINE, CA. 92618
TEL: (949) 951-8808 FAX: (949) 951-3974

TITLE: FLEXIBLE LIGHT PIPE ASSY, 7mm ROUND, VERTICAL			
DESIGNED: B. OLIVER	DATE: 09/14/09	PART NO: FLP25VX.X-XX	REVISION: F
REVISED: K. BARON	DATE: 11/13/18	CAGE CODE: 32559	
CHECKED: TD. NGUYEN	DATE: 11/13/18	SCALE: NONE	SHEET # 1 OF 3

CAD GENERATED DOCUMENT, DO NOT MEASURE DRAWING

REV.	DESCRIPTION	DATE	APPROVED
	See Sheet 1		

FLEXIBLE LP ASSY Part No.	ADAPTER Part No.	LED Part No.	Peak Wave Length λp(nm)	Emitted Color	Electro-Optical Data @ 20mA Vf (V) TYP	Vf (V) MAX	Iv (mcd) TYP
FLP25VX.X-SG	FLPV2-SG	3SGC-F	568	SUPER GREEN	2.1	2.8	50
FLP25VX.X-SY	FLPV2-SY	3SYC-F	590	SUPER YELLOW	2.0	2.8	50
FLP25VX.X-SR	FLPV2-SR	3SRC-F	645	SUPER RED	1.7	2.4	60
FLP25VX.X-UBW	FLPV2-UBW	3UBWC-0.6K-F	470	BLUE	4.0	4.5	400
FLP25VX.X-UT	FLPV2-UT	3UTC-F	500	TURQUOISE	3.5	4.0	800
FLP25VX.X-UG	FLPV2-UG	3UGC-F	570	GREEN	2.1	2.4	200
FLP25VX.X-SUG	FLPV2-SUG	3SUGC-F	570	GREEN	2.1	2.4	300
FLP25VX.X-UY	FLPV2-UY	3UYC-F	590	YELLOW	2.0	2.4	300
FLP25VX.X-UR	FLPV2-UR	3URC-F	645	RED	1.7	2.4	200
FLP25VX.X-SUR	FLPV2-SUR	3SURC-F	640	RED	1.8	2.4	200
FLP25VX.X-UW	FLPV2-UW	3UWC1.035C-F	-	WHITE	3.2	3.6	6000

VISIT WWW.BIVAR.COM FOR CURRENT LED DATASHEETS
LED DETAILS ON DATASHEETS TAKE PRECEDENCE OVER DETAILS SHOWN HERE

FLP25V X.X - XXX

FLEXIBLE LIGHT PIPE SERIES

Emitted Colors

"L" LENGTH, inches
available in 0.1" increments only
e.g. 6.0, 11.5

BIVAR®

PART NO: FLP25VX.X-XX	REVISION: F
SCALE: NONE	SHEET # 2 OF 3

CAD GENERATED DOCUMENT, DO NOT MEASURE DRAWING

REV.	DESCRIPTION	DATE	APPROVED
	See Sheet 1		

FLEXIBLE LP ASSY Part No.	Adapter Part No.	LED Part No.	Peak Wave Length λp(nm)	Emitted Color	Electro-Optical Data @ 20mA		
					Vf (V)		Iv (mcd)
					TYP	MAX	TYP
FLP25VX.X-BC	FLPV2-BC	3BCC-F	625	HE RED	2.0	2.8	8
			568	GREEN	2.1	2.8	8
FLP25VX.X-SBC	FLPV2-SBC	3SBCC-F	645	SUPER RED	1.7	2.4	100
			568	HE GREEN	2.1	2.8	60

VISIT WWW.BIVAR.COM FOR CURRENT LED DATASHEETS
LED DETAILS ON DATASHEETS TAKE PRECEDENCE OVER DETAILS SHOWN HERE

FLP25V X.X - XXX

FLEXIBLE LIGHT PIPE SERIES

Emitted Colors

"L" LENGTH, inches
available in 0.1" increments only
e.g. 6.0, 11.5

BIVAR®

PART NO: FLP25VX.X-XX	REVISION: F
SCALE: NONE	SHEET # 3 OF 3

CAD GENERATED DOCUMENT, DO NOT MEASURE DRAWING