VSC7426

24-Port Layer-2 Gigabit Ethernet Switch with 12 Fully Integrated Copper PHYs and Embedded 416 MHz CPU

Microsemi's next-generation switch delivers the industry's lowest power GbE switching solution.

The VSC7426 is the industry's first fully integrated 24-port Gigabit Ethernet switch with 12 copper PHYs in a single package. In conjunction with Microsemi's 12-port PHY VSC8512 or VSC8522, a 24-port switch can be designed using only two ICs.

The VSC7426 leverages Microsemi's new 65 nm SimpliPHY™ technology, resulting in the one of the most cost-effective and lowest power consumption devices in the industry. The dual chip solution combines the most advanced Ethernet energy efficiency features for bringing green technology solutions to market.

The VSC7426 provides a rich set of Small Medium Enterprise (SME) Ethernet switching features such as Layer-2 forwarding with advanced TCAM-based VLAN and QoS processing, enabling the delivery of differentiated services. Security is ensured through frame processing using a TCAM-based Versatile Content Aware Processor (VCAP-II). The VSC7426 contains a powerful 416 MHz CPU, enabling full management of the switch.

A comprehensive application programming interface (API) and software development package is available for Layer-2 Managed Ethernet applications for faster time-to-market. The software API package integrates easily with third-party software, preserving existing software investments.

Highlights

- Supports IEEE 802.3az and green energy efficiency modes with ActiPHY™ and PerfectReach™
- Lowest BOM solution requires only two ICs
- Three QSGMII MAC interfaces

Applications

- Ethernet switches
- Edge and Access platforms
- Customer-premises equipment (CPE) and network termination equipment (NTE)

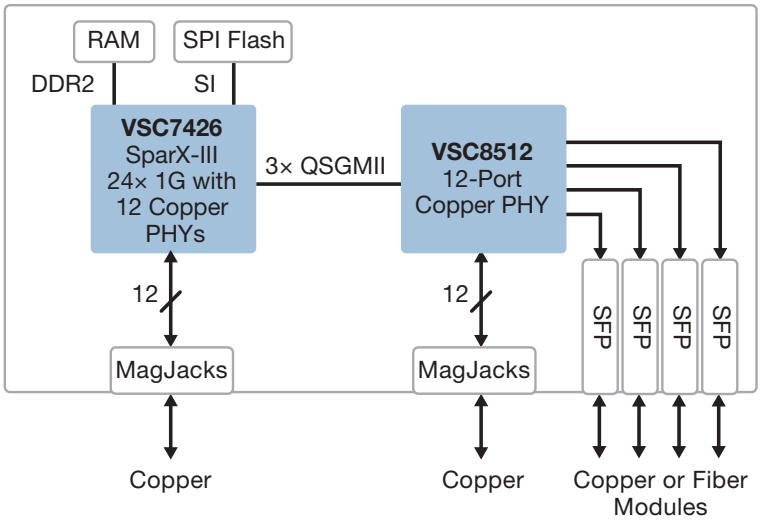

Microsemi makes no warranty, representation, or guarantee regarding the information contained herein or the suitability of its products and services for any particular purpose, nor does Microsemi assume any liability whatsoever arising out of the application or use of any product or circuit. The products sold hereunder and any other products sold by Microsemi have been subject to limited testing and should not be used in conjunction with mission-critical equipment or applications. Any performance specifications are believed to be reliable but are not verified, and Buyer must conduct and complete all performance and other testing of the products, alone and together with, or installed in, any end-products. Buyer shall not rely on any data and performance specifications or parameters provided by Microsemi. It is the Buyer's responsibility to independently determine suitability of any products and to test and verify the same. The information provided by Microsemi hereunder is provided "as is, where is" and with all faults, and the entire risk associated with such information is entirely with the Buyer. Microsemi does not grant, explicitly or implicitly, to any party any patent rights, licenses, or any other IP rights, whether with regard to such information itself or anything described by such information. Information provided in this document is proprietary to Microsemi, and Microsemi reserves the right to make any changes to the information in this document or to any products and services at any time without notice.

VSC7426

24-Port Layer-2 Gigabit Ethernet Switch with 12 Fully Integrated Copper PHYs and Embedded 416 MHz CPU

Best-In-Class Power Consumption

- Lowest power 24-port Gigabit Ethernet switch available in the market
- Green energy efficiency modes including ActiPHY™, Perfect-Reach™, and Draft IEEE 802.3az
- Two ICs reduce overall power requirements
- Optimal power consumption for all link speeds

Features

- Twelve integrated IEEE 802.3ab-compliant 10/100/1000BASE-T Ethernet copper transceivers with VeriPHY™ cable diagnostics
- Three QSGMII MAC interfaces
- Integrated 416 MHz MIPS CPU with DDR2 and serial Flash interface
- Advanced Access and QoS Control Lists (ACL and QCL) support through TCAM-based match patterns
- Integrated temperature monitoring circuit
- Integrated fan controller
- 8 K MAC addresses and 4 K VLAN support
- Supports IEEE 1149.1 JTAG boundary scan, IEEE 1149.6 AC-JTAG, QSGMII v1.2, and 100BASE-FX and 1000BASE-X

Layer 2 Switching

- 24-port Gigabit Ethernet switch with nonblocking wire-speed performance
- Link aggregation (IEEE 802.3ad) with programmable traffic distribution based on Layer 2 through Layer 4 information
- Wire-speed hardware-based learning and CPU-based learning configurable per port
- Independent and shared VLAN learning
- Jumbo frame support up to 12.2 kilobytes with per-port programmable MTU
- Q-in-Q tagging support
- 4 megabits of integrated shared packet memory
- Audio and video bridging (AVB)

QoS

- Eight QoS queues per port with strict or deficit-weighted round robin scheduling
- QoS classification based on IEEE 802.1p, EtherType, VID, MAC/IP addresses, IPv4/IPv6 DSCP, and UDP/TCP ports and ranges
- Data rate shaper and policer per-queue, per-port for both ingress and egress directions
- Full-duplex fl ow control (IEEE 802.3x) and half-duplex back-pressure, symmetric and asymmetric
- Multicast and broadcast storm control with flooding control

Key Specifications

- 1 V core power supply
- 1.8 V and 2.5 V I/O power supplies
- 27 mm × 27 mm thermally enhanced plastic BGA package

Related Products

Visit www.microsemi.com for information about these related products:

- Ethernet switches
- 1G copper PHYs

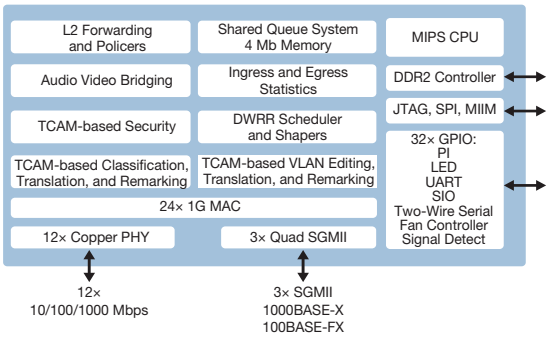

Microsemi Corporate Headquarters
One Enterprise, Aliso Viejo, CA 92656 USA
Within the USA: +1 (800) 713-4113
Outside the USA: +1 (949) 380-6100
Sales: +1 (949) 380-6136
Fax: +1 (949) 215-4996
email: sales.support@microsemi.com
www.microsemi.com

Microsemi Corporation (Nasdaq: MSCC) offers a comprehensive portfolio of semiconductor and system solutions for communications, defense and security, aerospace, and industrial markets. Products include high-performance and radiation-hardened analog mixed-signal integrated circuits, FPGAs, SoCs, and ASICs; power management products; timing and synchronization devices and precise time solutions; voice processing devices; RF solutions; discrete components; enterprise storage and communications solutions, security technologies, and scalable anti-tamper products; Ethernet solutions; Power-over-Ethernet ICs and midspans; custom design capabilities and services. Microsemi is headquartered in Aliso Viejo, California, and has approximately 4,800 employees worldwide. Learn more at www.microsemi.com.

©2010–2016 Microsemi Corporation. All rights reserved. Microsemi and the Microsemi logo are registered trademarks of Microsemi Corporation. All other trademarks and service marks are the property of their respective owners.

VPPD-02602. 1.0. 4/16.