THIS IS ISSUED IN STRICT CONFIDENCE THAT IT IS NOT USED AS A BASIS FOR MANUFACTURE OR SALE AND THAT IT IS NOT COPIED, REPRINTED OR DISCLOSED TO A THIRD PARTY EITHER WHOLLY OR IN PART WITHOUT THE PRIOR WRITTEN CONSENT OF CAL TEST ELECTRONICS, INC.

REVISIONS

REV.	DESCRIPTIONS	DATE	APPROVED
—	CLASS A RELEASED	1/12/02	
A	ADDED CAGE CODE	6/18/02	

1. LARGE INSULATED ALLIGATOR CLIP w/4 mm SAFETY BANANA JACK.
2. SPECIFICATIONS:
   INSULATOR: POLYAMIDE (NYLON)
   CONTACT: BRASS, NICKEL PLATED
3. RATING:
   VOLTAGE: 1000 V CATIII/600 V CATIV (IEC61010–031)
   CURRENT: 20 A MAX.
   TEMPERATURE: –20° C TO +80° C.

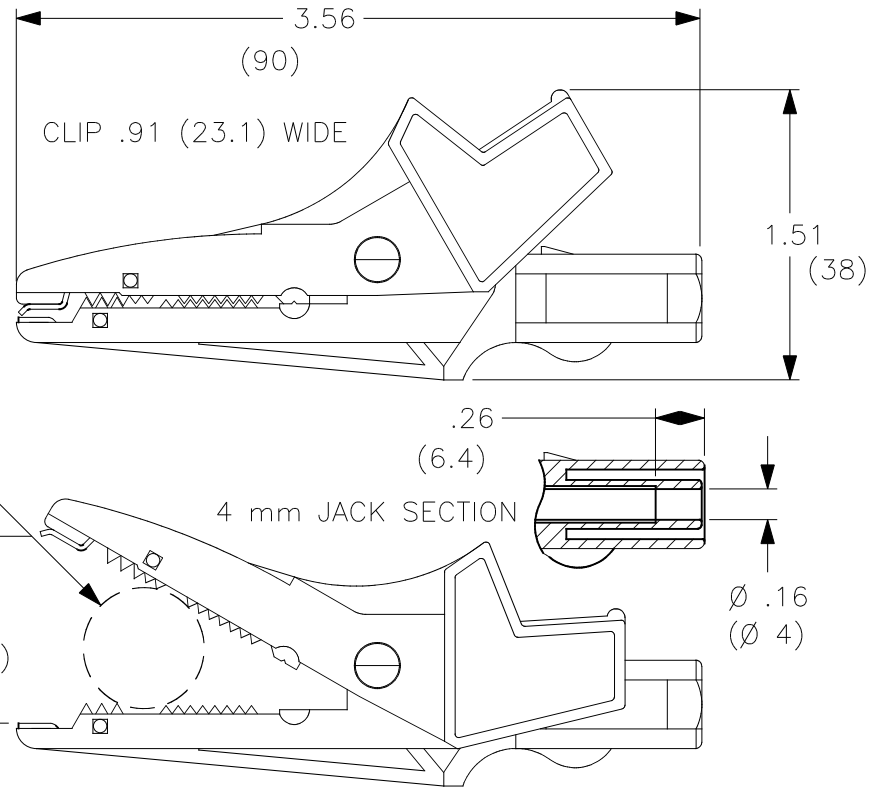

PART NUMBER

CT2392A–#

COLOR:
- 0 – BLACK
- 2 – RED
- 4 – YELLOW
- 5 – GREEN
- 6 – BLUE
- 9 – WHITE

THIRD ANGLE PROJECTION

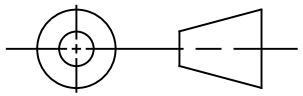

NEXT ASSY | USED ON

APPLICATION

UNLESS OTHERWISE SPECIFIED DIMENSIONS ARE IN INCHES
TOLERANCES ARE:
FRACTIONS ± 1/32
DECIMALS .XX ± .02, .XXX ±.005
DO NOT SCALE DRAWING

MATERIAL

FINISH

CONTRACT NO.

APPROVALS	DATE
DRAWN WDH	1/12/02
CHECKED	
ENGR.	
DESIGN ACTIVITY	

Cal Test Electronics
22820 Savi Ranch Parkway
Yorba Linda, CA 92887-4610

TITLE
LARGE INSULATED ALLIGATOR CLIP

SIZE	CAGE CODE	DWG. NO.	REV.
A	43F45	P2392A0	A

SCALE 1:1 | SHEET 1 OF 1