THIS DRAWING IS UNPUBLISHED. RELEASED FOR PUBLICATION -,- .
© COPYRIGHT - By - ALL RIGHTS RESERVED.

REVISIONS

| P | LTR | DESCRIPTION | DATE | DWN | APVD |
|---|---|---|---|---|---|
| | AH | REVISED PER ECO-12-012320 | 04JUL12 | KH | MZ |
| | AJ | REVISED PER ECO-17-009977 | 11JUL2017 | RS | MZ |

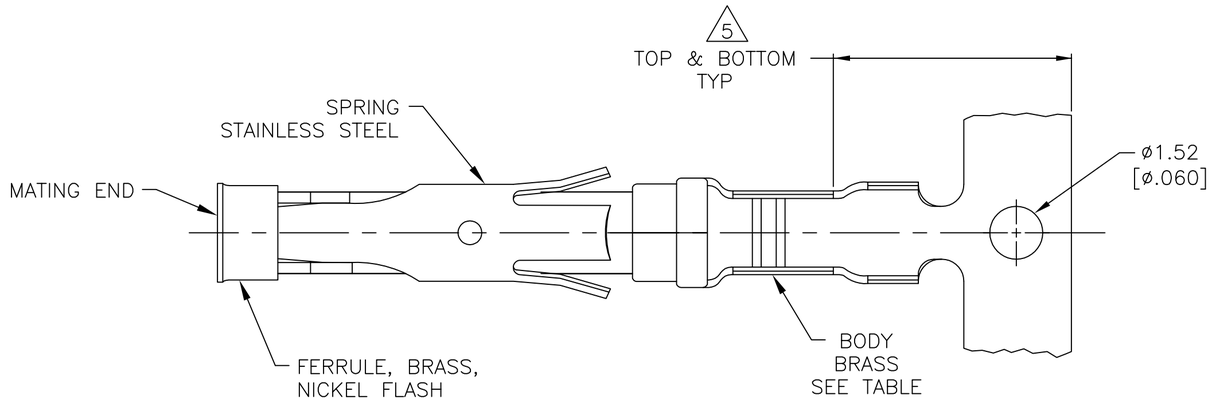


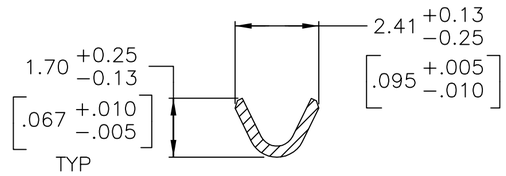


SECTION A–A

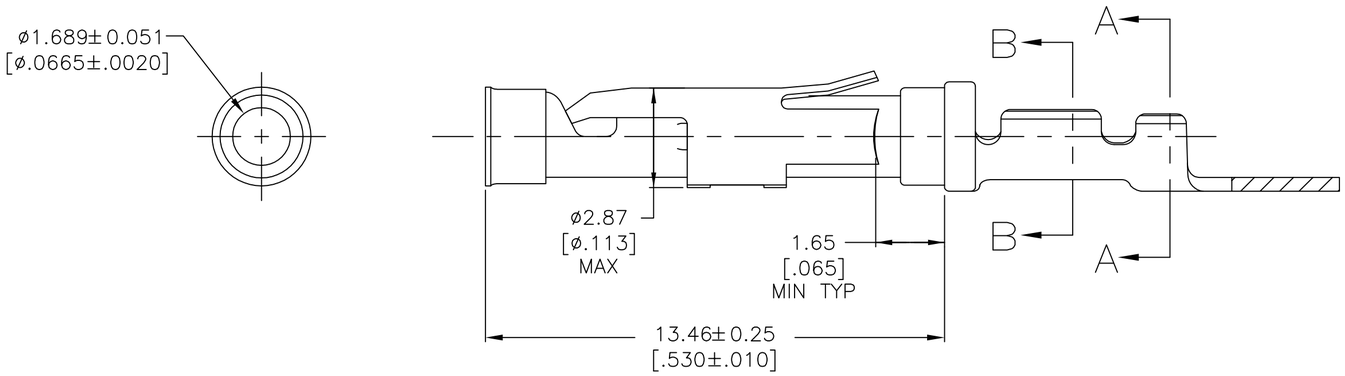


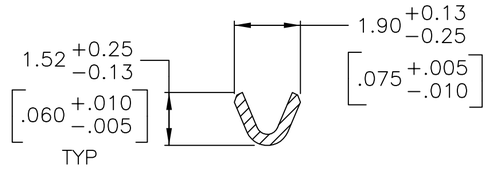


SECTION B–B

1. 0.76µm [.000030] MIN GOLD PER MIL-G-45204 ON MATING END FOR A LENGTH OF 5.08 [.200] MIN WITH 1.27µm[.000050] MIN MATTE TIN PLATE IN WIRE CRIMP AREA, BOTH OVER 0.76µm [.000030] MIN NICKEL PER QQ-N-290.
2. 1.27µm [.000050] MIN TIN-LEAD PER MIL-T-10727 OVER 0.76µm [.000030] MIN NICKEL PER QQ-N-290.
3. 0.76µm [.000030] MIN GOLD PER MIL-G-45204 ON MATING END FOR A LENGTH OF 5.08 [.200] MIN WITH A UNIFORM GRADIENT TO 0.25µm [.000010] MIN GOLD PER MIL-G-45204 ON THE REMAINDER OVER 0.76µm [.000030] MIN NICKEL PER QQ-N-290.
4. 0.38µm [.000015] MIN GOLD PER MIL-G-45204 ON MATING END FOR A LENGTH OF 5.08 [.200] MIN WITH 1.27µm[.000050] MIN MATTE TIN PLATE IN WIRE CRIMP AREA, BOTH OVER 0.76µm [.000030] MIN NICKEL PER QQ-N-290.
5. GOLD PLATING NEED NOT APPEAR IN THIS AREA.
6. REVERSE REELED FOR MINI-APPLICATOR.
7. WIRE RANGE 26-24 AWG. INSULATION RANGE 0.89[.035]-1.40[.055].
8. 0.38µm [.000015] MIN GOLD PER MIL-G-45204 ON MATING END FOR A LENGTH OF 5.08 [.200] MIN, 1.27µm [.000050] MIN TIN-LEAD PER MIL-T-10727 FOR A LENGTH OF 5.69 [.224] MIN ON OPPOSITE END, BOTH OVER 1.27µm [.000050] MIN NICKEL PER QQ-N-290 ON ENTIRE CONTACT.
9. 1.27µm [.000050] MIN TIN PER MIL-T-10727 OVER 0.76µm [.000030] MIN NICKEL PER QQ-N-290.
10. 0.38µm [.000015] MIN GOLD PER MIL-G-45204 ON MATING END FOR A LENGTH OF 5.08 [.200] MIN, 1.27µm [.000050] TIN PER MIL-T-10727 FOR A LENGTH OF 5.69 [.224] MIN ON OPPOSITE END, BOTH OVER 1.27µm [.000050] MIN NICKEL PER QQ-N-290 ON ENTIRE CONTACT.

| | REELING | BODY FINISH | LOOSE PIECE REF | PART NO |
|---|---|---|---|---|
| | STANDARD | 9 | 1-66109-7 | 1-66108-7 |
| OBSOLETE | 6 | 10 | — | 1-66108-6 |
| | 6 | 9 | 1-66109-7 | 1-66108-5 |
| OBSOLETE | 6 | 8 | 1-66109-3 | 1-66108-4 |
| | 6 | 1 | 66109-4 | 66108-8 |
| | 6 | 4 | 66109-3 | 66108-7 |
| | 6 | 2 | 66109-2 | 66108-6 |
| | 6 | 3 | 66109-1 | 66108-5 |
| | STANDARD | 1 | 66109-4 | 66108-4 |
| | STANDARD | 4 | 66109-3 | 66108-3 |
| | STANDARD | 2 | 66109-2 | 66108-2 |
| | STANDARD | 3 | 66109-1 | 66108-1 |

THIS DRAWING IS A CONTROLLED DOCUMENT.

DIMENSIONS: mm [INCHES]

TOLERANCES UNLESS OTHERWISE SPECIFIED:
0 PLC ± –
1 PLC ± –
2 PLC ± 0.13 [.005]
3 PLC ± –
4 PLC ± –
ANGLES ± –

MATERIAL: SEE CALLOUTS
FINISH: SEE CALLOUTS

DWN R.SHIREY 08/06/91
CHK R.STONE 9-19-91
APVD J.WESTMAN 9-20-81
PRODUCT SPEC —
APPLICATION SPEC —
WEIGHT —

TE Connectivity

NAME: SOCKET ASSEMBLY, .062, TYPE III+

| SIZE | CAGE CODE | DRAWING NO | RESTRICTED TO |
|---|---|---|---|
| A2 | 00779 | C-66108 | — |

CUSTOMER DRAWING | SCALE 8:1 | SHEET 1 OF 1 | REV AJ

66108

1471-9 (1/15)