Mallory Sonalert Products Inc.	Part #	PK-27N35WQ
Sales Outline Drawing	Revision	**B**

May not be suitable for all medical and aerospace applications.

Specifications: Contact Mallory Sonalert to discuss your application.

Oscillation Frequency (Hz)	3500 ± 500
Operating Voltage (Vdc)	3 ~ 28
Rated Voltage (Vdc)	12
Current Consumption (mA/max)	15 at Rated Voltage
Sound Pressure Level (dB/min)	90 at 30cm at Rated voltage
Tone/Pulse Rate (Hz0	Constant
Operating Temperature (°C)	-20 ~ +70
Storage Temperature (°C)	-30 ~ +80
Housing	ABS 757 UL94HB plastic resin (Color: Black)
Lead Wires	28 AWG
Weight (Grams)	6.8
Condition by wave soldering (°C)	245 ±5 / 3±0.5 sec
Condition by hand soldering (°C)	350 ±20 / within 5 sec
Options	For other options contact factory

RoHS Compliant

Dimensions: (units: mm)

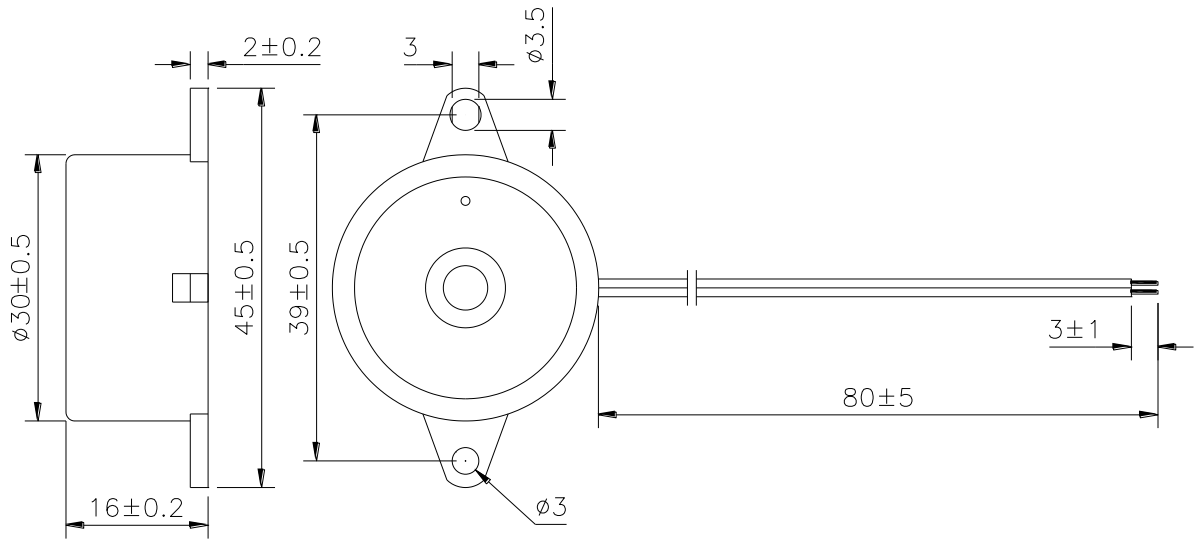

4411 South High School Road, Indianapolis, Indiana 46241 USA ● Phone (317) 612-1000 ● Fax (317) 612-1010 ● http://www.mspindy.com