# Bullet Connectors

159-2156, 159-3156

KOBICONN

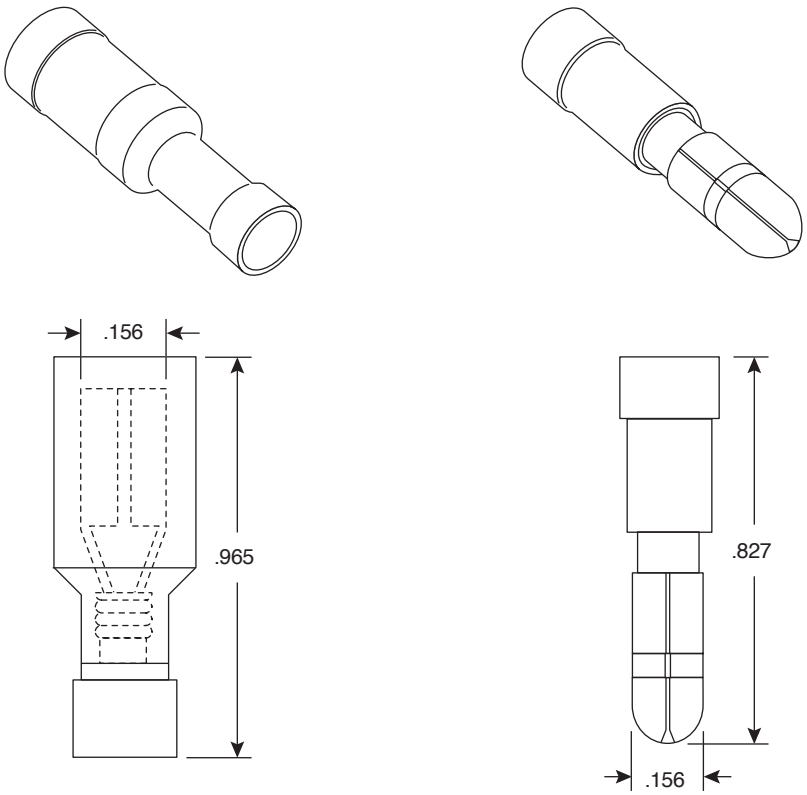


**159-2156** **159-3156**

**Dimensions: In.**

| SPECIFICATIONS | |
|---|---|
| **Wire Range:** | 21~16AWG |
| **Current Rating:** | 10A max. |
| **Voltage Rating:** | 300V max. @ 75°C |
| **Terminal Material:** | Brass, .016" Thick |
| **Insulation Material:** | Vinyl |
| **Insulation Color:** | Red |

*Date Last Revised: 06-23-05*





*Available from Mouser Electronics*
*1-800-346-6873*
*www.mouser.com*



Specifications are subject to change without notice. No liability or warranty implied by this information. Environmental compliance based on producer documentation.