390-053
Submersible EMI/RFI Cable Sealing Backshell
with Strain Relief
Type F - Rotatable Coupling - Low Profile

CONNECTOR DESIGNATORS

A-F-H-L-S

ROTATABLE COUPLING

TYPE F INDIVIDUAL AND/OR OVERALL SHIELD TERMINATION

390 F S 053 M 16 10 M 6

- Product Series
- Connector Designator
- Angle and Profile
  - A = 90°
  - B = 45°
  - S = Straight
- Basic Part No.
- Finish (Table II)
- Shell Size (Table I)
- Cable Entry (Tables X, XI)
- Strain Relief Style (H, A, M, D)
- Length: S only (1/2 inch increments: e.g. 6 = 3 inches)

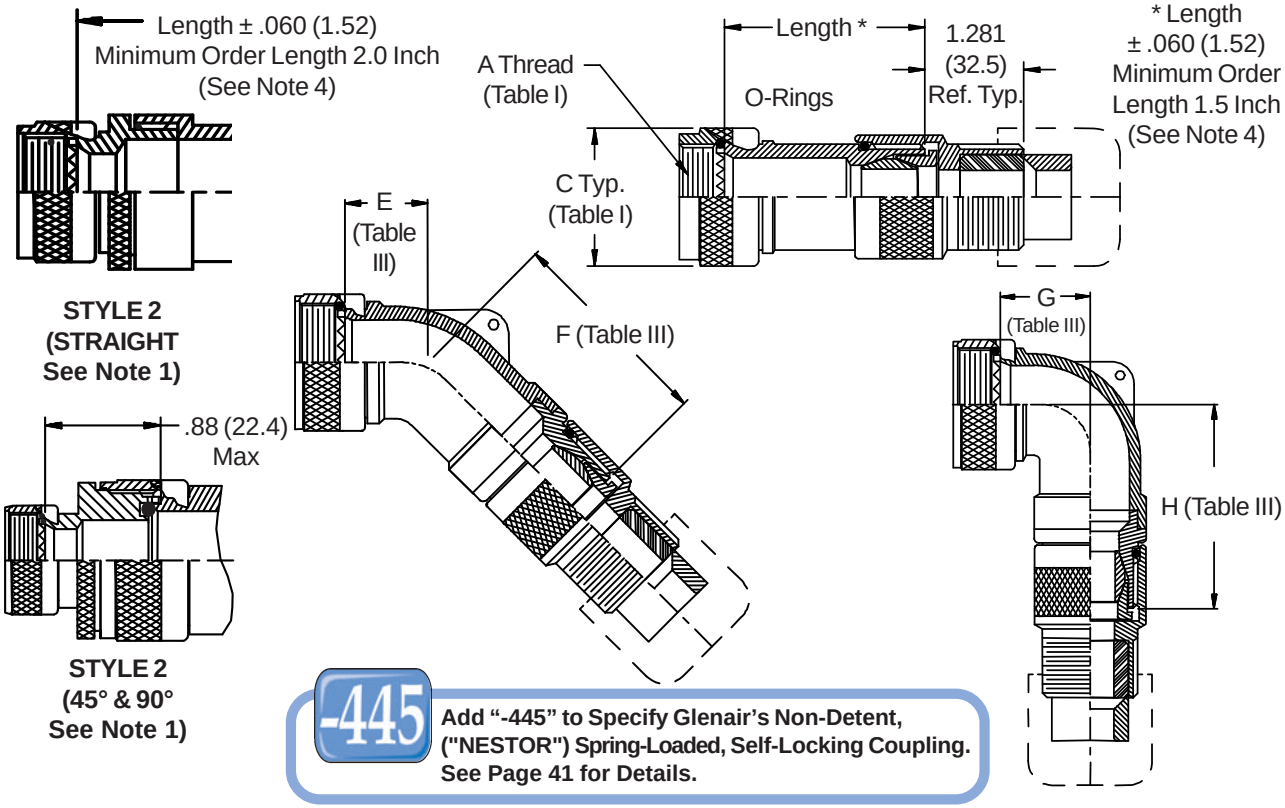

-445 **Add "-445" to Specify Glenair's Non-Detent, ("NESTOR") Spring-Loaded, Self-Locking Coupling. See Page 41 for Details.**

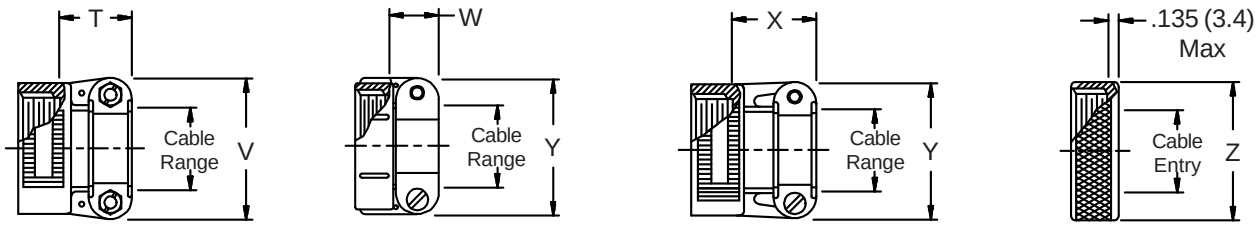

© 2005 Glenair, Inc.

390-053
Submersible EMI/RFI Cable Sealing Backshell
with Strain Relief
Type F - Rotatable Coupling - Low Profile

TABLE III: ELBOW DIMENSIONS

Shell Size Conn. Desig. A-F-L-S	H	E Max		F Max		G Max		H Max	
08	09	.457	(11.6)	1.410	(35.8)	.500	(12.7)	1.420	(36.1)
10	11	.520	(13.2)	1.470	(37.3)	.595	(15.1)	1.540	(39.1)
12	13	.582	(14.8)	1.530	(38.9)	.610	(15.5)	1.560	(39.6)
14	15	.645	(16.4)	2.144	(54.5)	.700	(17.8)	2.154	(54.7)
16	17	.738	(18.7)	2.254	(57.3)	.885	(22.5)	2.244	(57.0)
18	19	.926	(23.5)	2.444	(62.1)	.975	(24.8)	2.414	(61.3)
20	21	.926	(23.5)	2.444	(62.1)	.975	(24.8)	2.414	(61.3)
22	23	1.020	(25.9)	2.657	(67.5)	1.125	(28.6)	2.587	(65.7)
24	25	1.020	(25.9)	2.657	(67.5)	1.125	(28.6)	2.587	(65.7)
28		1.145	(29.1)	2.690	(68.3)	1.225	(31.1)	2.740	(69.6)

See inside back cover fold-out or pages 13 and 14 for Tables I and II.

TABLE X: CABLE ENTRY

Dash No.	T Max		V Max		Cable Range Min		Cable Range Max	
04	.780	(19.8)	.957	(24.3)	.125	(3.2)	.312	(7.9)
06	.780	(19.8)	1.145	(29.1)	.250	(6.4)	.437	(11.1)
08	.780	(19.8)	1.332	(33.8)	.387	(9.3)	.562	(14.3)
10	.780	(19.8)	1.332	(33.8)	.350	(8.9)	.625	(15.9)
12	.811	(20.6)	1.551	(39.4)	.500	(12.7)	.750	(19.1)
16	.905	(23.0)	1.770	(45.0)	.625	(15.9)	.937	(23.8)
20	1.092	(27.7)	2.113	(53.7)	.875	(22.2)	1.250	(31.8)
24	1.124	(28.5)	2.363	(60.0)	1.000	(25.4)	1.375	(34.9)
28	1.399	(35.5)	2.770	(70.4)	1.250	(31.8)	1.625	(41.3)
32	1.399	(35.5)	3.020	(76.7)	1.437	(36.5)	1.875	(47.6)

1. When maximum cable entry (page 21) is exceeded, Style 2 will be supplied. Dimensions E, F, G and H will not apply. Please consult factory.
2. Metric dimensions (mm) are indicated in parentheses.
3. Cable range is defined as the accommodations range for the wire bundle or cable. Dimensions shown are not intended for inspection criteria.
4. Consult factory for shorter lengths on straight backshells.
5. Interface O-Ring not supplied with connector designator A.

TABLE XI: CABLE ENTRY

Dash No.	W Max		X Max		Y Max		Z Max		Cable Range Min **		Cable Range Max	
03*	.437	(11.1)	.760	(19.3)	.843	(21.4)	.630	(16.0)	.156	(4.0)	.250	(6.4)
04*	.437	(11.1)	.760	(19.3)	.906	(23.0)	.755	(19.2)	.188	(4.8)	.312	(7.9)
06*	.500	(12.7)	.760	(19.3)	1.093	(27.8)	.942	(23.9)	.281	(7.1)	.438	(11.1)
08	.563	(14.3)	.760	(19.3)	1.187	(30.1)	1.067	(27.1)	.387	(9.3)	.562	(14.3)
10	.563	(14.3)	.760	(19.3)	1.281	(32.5)	1.192	(30.3)	.375	(9.5)	.625	(15.9)
12	.563	(14.3)	.760	(19.3)	1.500	(38.1)	1.380	(35.1)	.438	(11.1)	.750	(19.1)
16	.656	(16.7)	1.073	(27.3)	1.719	(43.7)	1.535	(39.0)	.625	(15.9)	.938	(23.8)
20	.656	(16.7)	1.323	(33.6)	2.062	(52.4)	1.848	(46.9)	.875	(22.2)	1.250	(31.8)
24	.656	(16.7)	1.323	(33.6)	2.312	(58.7)	2.255	(57.3)	1.000	(25.4)	1.375	(34.9)
28	1.188	(30.2)	1.572	(39.9)	2.719	(69.1)	2.505	(63.6)	1.250	(31.8)	1.625	(41.3)
32*	1.187	(30.1)	1.572	(39.9)	2.969	(75.4)	2.755	(70.0)	1.437	(36.5)	1.875	(47.6)
40*	1.125	(28.6)	1.572	(39.9)	3.531	(89.7)	3.255	(82.7)	1.875	(47.6)	2.375	(60.3)

* Not available in Style M clamp.

** Not Applicable Style D

© 2005 Glenair, Inc.