Super sealed CE Miniature limit switch

(Pending) (Pending)

New

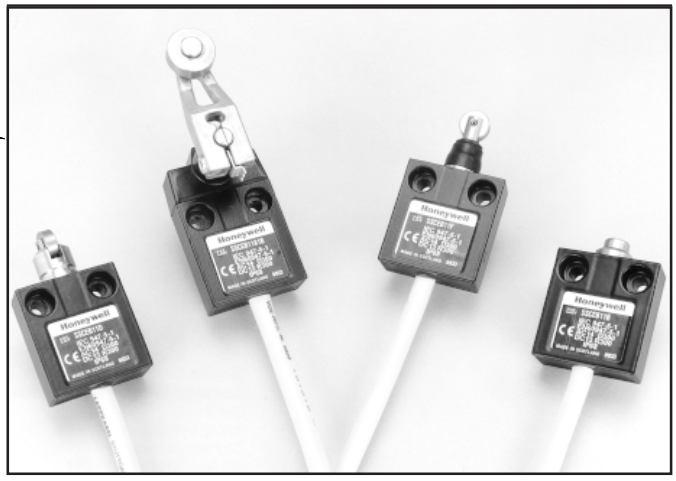

Features

- Fully sealed - capable of working when submerged
- Compact construction
- Pre-wired or connector versions
- Die-cast zinc housing
- Wide selection of actuators
- Gang mounting capability
- Variable length PUR cable
- Side and bottom exit cable/connector
- Simple two-screw mounting
- IP66/67, IP68 sealing

Benefits

- Suitable for difficult operating environments
- Suitable for applications where space is at a premium
- Fast and easy to install
- Application flexibility
- Multiple switching in small spaces
- Enhanced choice for application
- Suitable for aggressive environments

Description

The Super sealed CE Series Miniature limit switch has been designed for reliability in the harshest of environments. Its robust design, corrosion limiting features, flexible PUR cable and super sealing allows it to operate fully submerged in a range of fluids. Its small size allows operation in confined spaces. A range of different actuators offers flexibility in application.

Low energy switching

In today's demanding age of low energy controls, electromechanical switches are frequently used in interface directly with PLCs and other low energy devices. To accommodate this requirement Super sealed CE offers a gold plated contact version of the standard basic switch. This improves reliability of switching at low currents and voltages by protecting the contact surfaces from contamination during operation or storage prior to use. Standard silver contacts have the disadvantage in that the contact may tarnish under certain environmental conditions, e.g. in the presence of moisture.

Low energy basic switches are rated as follows:
Operating Voltage U_e 1 to 50 Vac or Vdc
Operating Current I_e 1 to 100 mA

Electrical rating

		IEC947-5-1 / EN60947-5-1							
Designation & Utilization Category		Rated operational current Ie (A) at rated operational voltage Ue						VA rating	
		120V	240V	380V	480V	500V	600V	Make	Break
AC15	A600	6	3	1.9	1.5	1.4	1.2	7200	720
AC15	A300	6	3	-	-	-	-	7200	720
AC15	B300	3	1.5	-	-	-	-	3800	360
AC14	D300	0.6	0.3	-	-	-	-	432	72
		125V	250V						
DC13	Q300	0.55	0.27					69	69
DC13	R300	0.22	0.1					28	28

WARNING

MISUSE OF DOCUMENTATION

- The information presented in this product sheet (or catalogue) is for reference only. DO NOT USE this document as product installation information.
- Complete installation, operation and maintenance information is provided in the instructions supplied with each product.

Failure to comply with these instructions could result in death or serious injury.

Super sealed CE Series Miniature enclosed switch

Technical Data

Mechanical life	up to 10 million operations
Degree of protection	IP66/67, IP68
Temperature range	Operating: -40 °C to +90 °C (-40 °F to +194 °F)
Approvals/standards	IEC 60947-5-1 EN 60947-5-1 AC14 D300 DC13 R300
Electrical	Not suitable for isolation. SCPD, Quick blow fuse to IEC 127 suitable for rated current.
Shock	50 g conforming to IEC 68-2-27
Vibration	10 g conforming to IEC 68-2-6

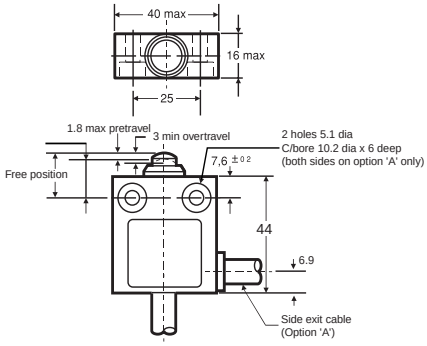

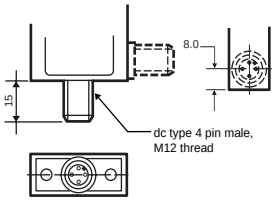

Cable/connector		Switch type Snap action contacts
		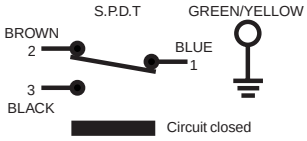
Connector	**0**	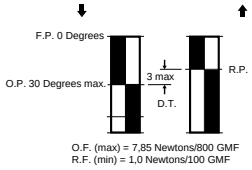
If cable option is required, specify cable length in 1 metre increments, e.g. **1 m**	**1**	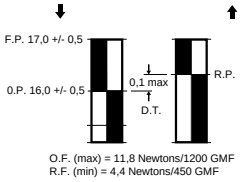
2 m	**2**	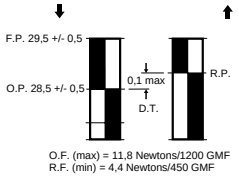
3 m	**3**	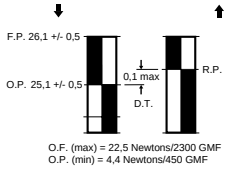
Note: **4 m to 9 m cable lengths available by special request only.**		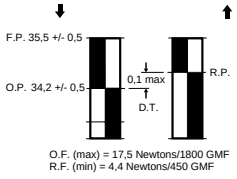

Side exit PUR cable = **A**

Bottom exit PUR cable = **B**

Side exit connector = **C**

Bottom exit connector = **D**

▲ Low energy contacts **1** **7▲**

See page 1

Ordering Guide:

SSCE **X** **X** **X**

Actuator type

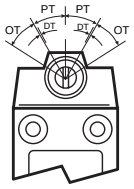

A See 'Options' for additional levers

Top Rotary action/lever

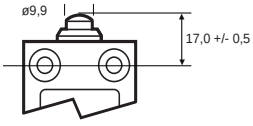

B

Top Pin Plunger

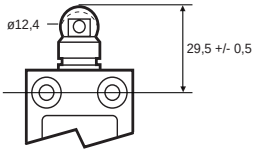

C

Top Roller Plunger, Parallel

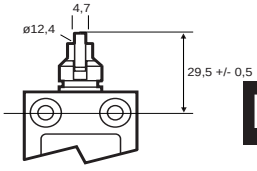

D

Top Roller Plunger, Perpendicular

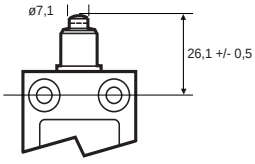

E

Top Pin Plunger, Boot Sealed

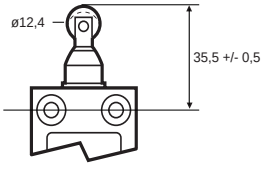

F

Top Roller Plunger, Parallel, Boot Sealed

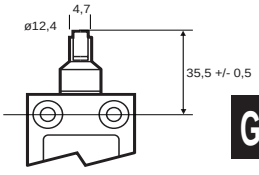

G

Top Roller Plunger, Perpendicular, Boot Sealed

Options (for actuator type 'A' only)

Fixed length lever plastic roller

Fixed length lever stainless steel roller

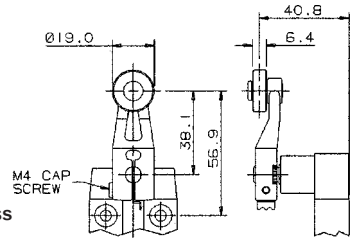

1A

1B

Adjustable length lever plastic roller

Adjustable length lever stainless steel roller

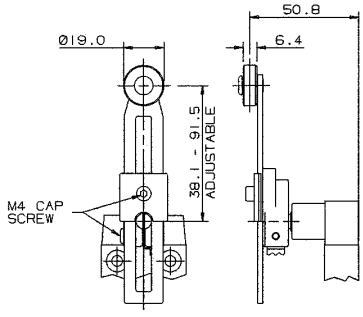

2A

2B

Adjustable rod lever

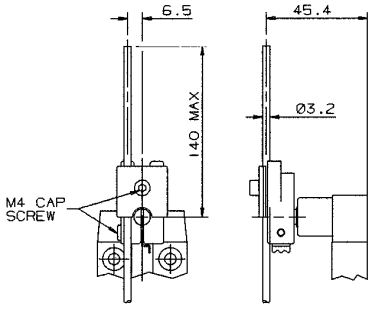

4J

No lever (leave blank)

--

X

XX

Warranty/Remedy

Honeywell warrants goods of its manufacture as being free of defective material and faulty workmanship. Contact your local sales office for warranty information. If warranted goods are returned to Honeywell during that period of coverage, Honeywell will repair or replace without charge those items it finds defective. The foregoing is Buyer's sole remedy and **is in lieu of all other warranties, expressed or implied, including those of merchantability and fitness for a particular purpose.**

While we provide application assistance, personally, through our literature and the Honeywell web site, it is up to the customer to determine the suitability of the product in the application.

Specifications may change at any time without notice. The information we supply is believed to be accurate and reliable as of this printing. However, we assume no responsibility for its use.

Sales and Service

Honeywell serves its customers through a worldwide network of sales offices and distributors. For application assistance, current specifications, pricing or name of the nearest Authorised Distributor, contact your local sales office or:

INTERNET: www.honeywell.com/sensing

E-mail: info@micro.honeywell.com

ASIA PACIFIC

Australia
Honeywell Pacific Inc.
Phone: +(61) 2-9353-7400
FAX: +(61) 2-9353-7406
Toll Free 1300-36-39-36
Toll Free Fax 1300-36-04-70

China - PRC - Beijing
Honeywell (Tianjin) Ltd.
Phone: +(86-10) 6561-0208
FAX: +(86-10) 6561-0618

China - Hong Kong SAR
Honeywell Ltd.
Phone: +(852) 2331 9133
FAX: +(852) 2953-6767

India
Tata Honeywell Ltd
Phone: +(91) 20 612 243
FAX: +(91) 20 675 992

Indonesia
PT Honeywell Ltd.
Phone: +(62) 21 521-3330
FAX: +(62) 21 521-3735

Japan
Yamatake Corporation
Phone: +(81) 466-20-2187
FAX: +(81) 466-20-2309

South Korea
LG - Honeywell Co. Ltd
Phone: +(822) 799-6011
FAX: +(822) 792-9013

Malaysia
Honeywell Engineering Sdn Bdh
Phone: +(603) 758-4988
FAX: +(603) 758-8922

New Zealand
Honeywell Pty Limited
Phone: +(64-9) 623-5050
FAX: +(64-9) 623-5060
Toll Free (0800) 202-088

Pakistan
Honeywell Pvt Limited
Phone: +(92-21) 455-5173
FAX: +(92-21) 455-5194
Toll Free (0800) 202-088

Philippines
Honeywell Systems (Philippines) Inc.
Phone: +(632) 636-1649
FAX: +(632) 636-1650

Singapore/SE Asia Regional Office
Honeywell Southeast Asia Pte. Ltd.
Phone: +(65) 355-2828
FAX: +(65) 445-3033

Taiwan R.O.C.
Honeywell Taiwan Ltd.
Phone: +(886) 22245-1000
FAX: +(886) 22245-3243

Thailand
Honeywell Systems Ltd.
Phone: +(662) 693 3099
FAX: +(662) 693 3085

Honeywell Asia Pacific Inc.
Phone: +(65) 354 6768
FAX: +(65) 354-6775

NORTH AMERICA

Canada
Honeywell LTD
Phone: 1-800-737-3360
FAX: 1-800-565-4130

USA
MICRO SWITCH Sensing and Control,
International Headquarters
Phone:1-800-537-6945
1-815-235-6847
FAX: 1-815-235-6545

EUROPE

Austria
Honeywell Austria GmbH
Phone: +(43) 1 727 80 366/246
FAX: +(43) 1 727 80 337

Belgium
Honeywell SA/NV
Phone: +(32) 2 728 2522
FAX: +(32) 2 728 2502

Bulgaria
Honeywell EOOD
Phone: +(359) 2 79 40 27
FAX: +(359) 2 79 40 90

Czech Republic
Honeywell spol. s.r.o.
Phone: +(420) 2 6112 3469/ 3424
FAX: +(420) 2 6112 3461

Denmark
Honeywell A/S
Phone: +(45) 39 55 55 55
FAX: +(45) 39 55 55 58

Finland
Honeywell OY
Phone: +(358) 9 3480101
FAX: +(358) 9 34801375

France
Honeywell SA
Phone: +(33) 1 60 19 82 68
FAX: +(33) 1 60 19 81 73

Germany
Honeywell AG
Phone: +(49) 69 8064 444
FAX: +(49) 69 8064 442

Hungary
Honeywell Kft.
Phone: +(36 1) 451 4300
FAX: +(36 1) 451 4343

Italy
Honeywell S.p.A.
Phone: +(39) 02 92146 450/456
FAX: +(39) 02 92146 490

The Netherlands
Honeywell B.V.
Phone: +(31) 20 565 69 11
FAX: +(31) 20 565 66 00

Norway
Honeywell A/S
Phone: +(47) 66 76 20 00
FAX: +(47) 66 76 20 90

Poland
Honeywell Sp. zo.o
Phone: +(48) 22 606 0900
FAX: +(48) 22 606 0901

Portugal
Honeywell Portugal Lda
Phone: +(351 21) 424 50 00
FAX: +(351 21) 424 50 99

Romania
Honeywell Bucharest
Phone: +(40) 1 2110076
FAX: +(40) 1 2103375

Commonwealth of Independent States (CIS)
Z.A.O. Honeywell
Phone: +(7 095) 796 98 00
FAX: +(7 095) 796 98 93

Slovak Republic
Honeywell s.r.o.
Phone: +(421 7) 58247 403/400
FAX: +(421 7) 58247 415

South Africa (Republic of)
Honeywell Southern Africa
Honeywell S.A. Pty. Ltd
Phone: +(27) 11 805 1211
FAX +(27) 11 805 1354

Spain
Honeywell S.A.
Phone: +(34) 91 313 6100
FAX: +(34) 91 313 6129

Sweden
Honeywell AB
Phone: +(46) 8 775 55 00
FAX: +(46) 8 775 56 00

Switzerland
Honeywell AG
Phone: +(41) 1 839 25 25
FAX: +(41) 1 831 03 14

Turkey
Honeywell Turkey A.S.
Phone: +(90) 216 464 4764
FAX: +(90) 216 464 4794

United Kingdom
Honeywell Control Systems Ltd
Phone: +(44) 1344 656000
FAX: +(44) 1344 656015

Mediterranean & African Distributors
Honeywell SpA
Phone: +(39) 2 921 46 232
FAX: +(39) 2 921 46 233

Middle East Headquarters
Honeywell Middle East Ltd.
Phone: +(9712) 272533
FAX +(9712) 269539

LATIN AMERICA

Argentina
Honeywell S.A.I.C.
Phone: +(54-11) 4383-9282
FAX: +(54-11) 4325-6470

Brazil
Honeywell do Brasil & Cia
Phone: +(55-11) 865-2055
FAX: +(55-11) 865-3894

Chile
Honeywell Chile, S.A.
Phone: +(56-2) 233-0688
FAX: +(56-2) 231-6679

Columbia
Honeywell Columbia, S.A.
Phone: +(57-1) 623-3239/3051
FAX: +(57-1) 623-3395

Ecuador
Honeywell S.A.
Phone: +(593-2) 981-560/1
FAX: +(593-2) 981-562

Mexico
Honeywell S.A. de C.V.
Phone: +(52-5) 259-1966
FAX: +(52-5) 570-2985

Puerto Rico
Honeywell Inc.
Phone: +(809)792-7075
FAX: +(809) 792-0053

Venezuela
Honeywell CA
Phone: +(58-2) 238-0211
FAX: +(58-2) 238-3391

This publication does not constitute a contract between Honeywell and its customers. The contents may be changed at any time without notice. It is the customer's responsibility to ensure safe installation and operation of the products. Detailed mounting drawings of all products illustrated are available on request. © Honeywell 1999

Honeywell

Honeywell Control Systems Ltd
Newhouse Industrial Estate
Motherwell ML1 5SB
Scotland, UK

www.honeywell.com/sensing

100432-EN Issue 1 01/00 UK07 Printed in the United Kingdom on environmentally friendly paper