THIS DRAWING IS UNPUBLISHED. RELEASED FOR PUBLICATION 2011
© COPYRIGHT 2011 - ALL RIGHTS RESERVED.

LOC	DIST
B	-

REVISIONS

P	LTR	DESCRIPTION	DATE	DWN	APVD
	AY1	COLOR CODE DETAILS ADDED	04FEB2014	TJ	JK
	AY2	ADDITION OF NOTE 13. TEXT "REF" DIM 3 & 3.7 IN ZONE C1 & C2. DIM27.5 TO "27.6 MAX" IN ZONEC5.PLATING ZONE 1 DIM 4.0 TO 3.0	21JULY2015	TJ	PS
	AY3	PN 1-163081-4 OBSOLETE	18MAY2017	TJ	NG

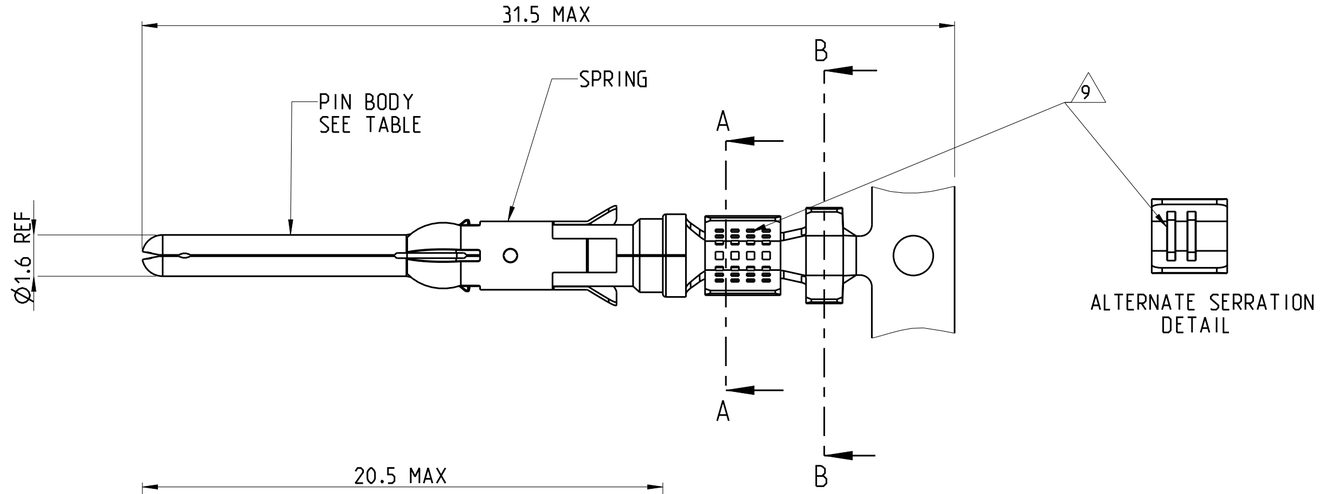

PLATING ZONES

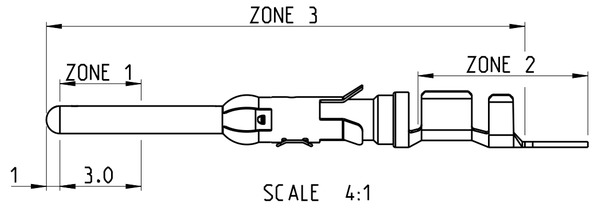

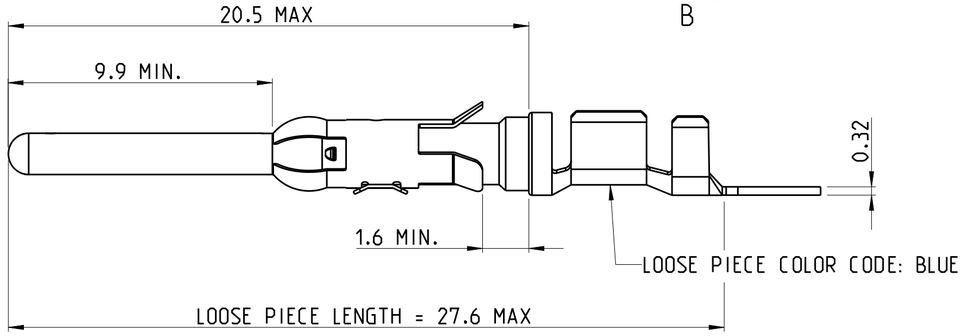

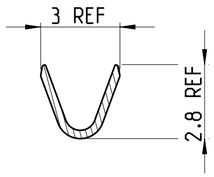

SECTION A-A

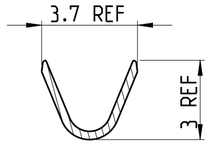

SECTION B-B

1. 1.27 MICRON MIN NICKEL PLATE OVER ZONE 3.
0.76 MICRON MIN PRECIOUS METAL PLATE OVER ZONE 1.
1 MICRON MIN TIN PLATE OVER ZONE 2.
CONFORMS TO THE REQUIREMENTS OF TE CONNECTIVITY PRODUCT SPEC 108-10042
BASED ON EIA/ECA-364-1000.01A (CONTROLLED ENVIRONMENT APPLICATIONS)

2. 1.27 MICRON MIN NICKEL PLATE OVER ZONE 3.
0.69 MICRON MIN PRECIOUS METAL PLATE OVER ZONE 1.
0.076 MICRON MIN GOLD FLASH PLATE OVER THE REMAINDER OF ZONE 3.
CONFORMS TO THE REQUIREMENTS OF TE CONNECTIVITY PRODUCT SPEC 108-10042
BASED ON EIA/ECA-364-1000.01A (CONTROLLED ENVIRONMENT APPLICATIONS)

3. 1.54 - 2.54 MICRON SILVER PLATE OVER ZONE 3.
0.76 MICRON MIN NICKEL PLATE OVER ZONE 3.

4. 1.27 MICRON MIN NICKEL PLATE OVER ZONE 3.
0.76 MICRON MIN GOLD PLATE OVER ZONE 1.
0.076 MICRON MIN GOLDFLASH PLATE OVER THE REMAINDER OF ZONE 3.

5. 1.27 MICRON MIN NICKEL PLATE OVER ZONE 3.
0.76 MICRON MIN GOLD PLATE OVER ZONE 1.
1 MICRON MIN TIN PLATE OVER ZONE 2.

6. HOT-DIPPED PRETIN

7. 1.27 MICRONS MIN NICKEL PLATE OVER ZONE 3.
1 - 3 MICRON ELECTRO-TIN PLATE OVER ZONE 3.

8. 0.76 MICRON MIN NICKEL PLATE OVER ZONE 3 PER QQ-N-290
1.5 - 2.54 MICRON SILVER PLATE OVER ZONE 3.

9. SERRATIONS CAN BE MULTILOCK OR TWO SLOTS

10. WIRE RANGE: 0.75 - 1.50 mm^2 (18-16 AWG)

11. INSULATION RANGE: 2.0 - 2.5 mm (.080-.100) DIA

12. SPECIAL REEL WITH 200 PCS FOR REEL-FED HANDTOOL

13. OMISSION OF 6 CONTACTS MAX PER REEL OF 5000PCS

14. OBSOLETE

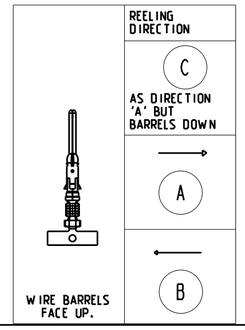

REELING	FINISH	SPRING MATERIAL	PIN BODY	LOOSE PIECE	PART NUMBER
12	7	STAINLESS STEEL	BRASS		5-163081-1
A	3	STAINLESS STEEL	BRASS	1-163082-6	1-163081-7
A	7	STAINLESS STEEL	PH. BRONZE		1-163081-5
B	6	STAINLESS STEEL	PH. BRONZE		1-163081-4 14
A	6	STAINLESS STEEL	BRASS		1-163081-3
B	6	STAINLESS STEEL	BRASS		1-163081-2
A	1	STAINLESS STEEL	BRASS	1-163082-0	1-163081-1
A	7	STAINLESS STEEL	BRASS	163082-1	163081-8
A	2	STAINLESS STEEL	BRASS	163082-2	163081-7
B	2	STAINLESS STEEL	BRASS		163081-2
B	7	STAINLESS STEEL	BRASS		163081-1

THIS DRAWING IS A CONTROLLED DOCUMENT.

DIMENSIONS: mm

TOLERANCES UNLESS OTHERWISE SPECIFIED:
0 PLC ±0.5
1 PLC ±0.15
2 PLC ±0.15
3 PLC ±0.15
4 PLC ±-
ANGLES ±2°

MATERIAL: SEE TABLE
FINISH: SEE TABLE

DWN J.BRIGHT 24/10/11
CHK M.GREENER 24/10/11
APVD D PENNINGTON 11/06/12
PRODUCT SPEC 108-10042
APPLICATION SPEC 114-10004
WEIGHT

TE Connectivity

NAME: TYPE III+, SIZE 16, PIN ASS'Y
18-16 AWG, 2.0-2.5mm DIA INSULATION

SIZE A2 | CAGE CODE 00779 | DRAWING NO C-163081 | RESTRICTED TO -

CUSTOMER DRAWING | SCALE NTS | SHEET 1 OF 1 | REV AY3