THIS DRAWING IS UNPUBLISHED. RELEASED FOR PUBLICATION -,- .
© COPYRIGHT - BY TYCO ELECTRONICS CORPORATION. ALL RIGHTS RESERVED.

LOC	DIST
AJ	16

REVISIONS

P	LTR	DESCRIPTION	DATE	DWN	APVD
	L	REVISED PER ECO-10-008441	21MAY10	HMR	KW

1 COPPER ALLOY

2 SILVER PLATE PER QQ-S-365, 5.08 MIN THICKNESS. µm [.000200]

3 TIN-LEAD PLATE PER ASTM-B-545, 2.54 MIN THICKNESS, WITH SUPPLEMENTAL ANTI FRETTING LUBRICANT. µm [.000100]

4 TIN PLATE PER ASTM-B-545, 2.54 MIN THICKNESS, WITH SUPPLEMENTAL ANTI FRETTING LUBRICANT. µm [.000100]

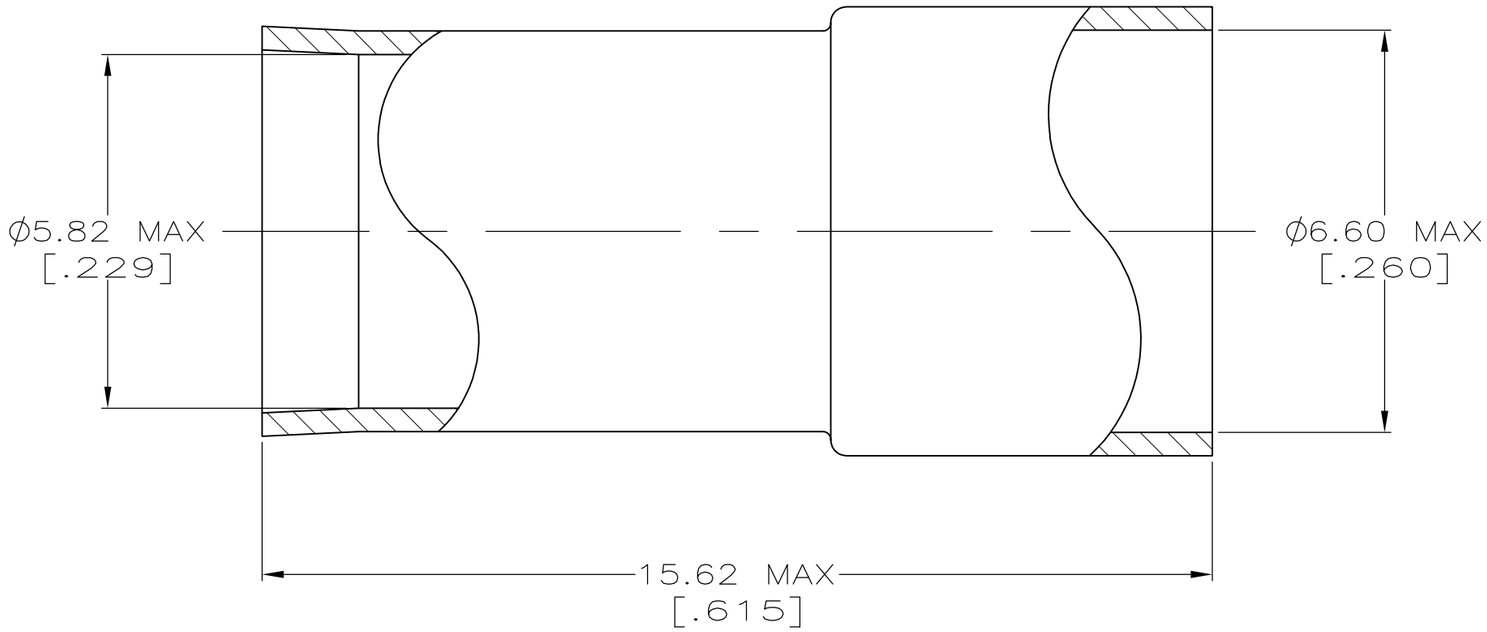

	4	9-228784-0
OBSOLETE	2	228784-4
	3	228784-3
	FINISH	PART NUMBER

THIS DRAWING IS A CONTROLLED DOCUMENT.

DIMENSIONS: mm [INCHES]

TOLERANCES UNLESS OTHERWISE SPECIFIED:
0 PLC ± -
1 PLC ± -
2 PLC ± -
3 PLC ± -
4 PLC ± -
ANGLES ± -

MATERIAL: SEE NOTES

FINISH: SEE NOTES

DWN MICHAEL E. COWHER 14NOV95
CHK FRANK MORANA 14NOV95
APVD FRANK MORANA 14NOV95
PRODUCT SPEC —
APPLICATION SPEC —
WEIGHT —

Tyco Electronics
Tyco Electronics Corporation
Harrisburg, Pa 17105-3608

NAME: FERRULE

SIZE	CAGE CODE	DRAWING NO	RESTRICTED TO
A3	00779	C-228784	—

CUSTOMER DRAWING

SCALE 10:1 SHEET 1 OF 1 REV L