MATERIAL#	ENGINEERING#	FINISHED LENGTH	REF. CABLE	CABLE COLOR
1300680095	TC40300A56M020G	6.56' +3.50"-0 (2.0M +88.9MM-0)	A56 (STANDARD)	BLACK
1300680096	TC40300A79M020G	6.56' +3.50"-0 (2.0M +88.9MM-0)	A79 (FLEX RATED 3 MIL)	GRAY
1300680113	TC40300K27M020G	6.56' +3.50"-0 (2.0M +88.9MM-0)	K27 (HI FLEX 10 MIL)	BLACK

C

QC FEMALE FACE VIEW

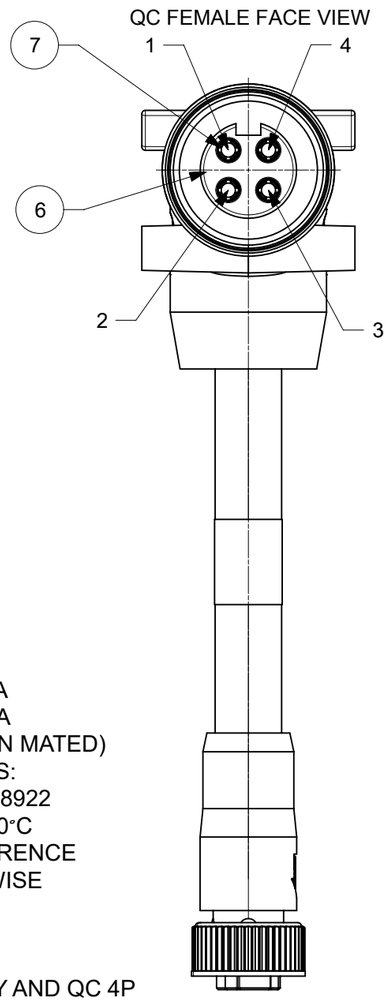

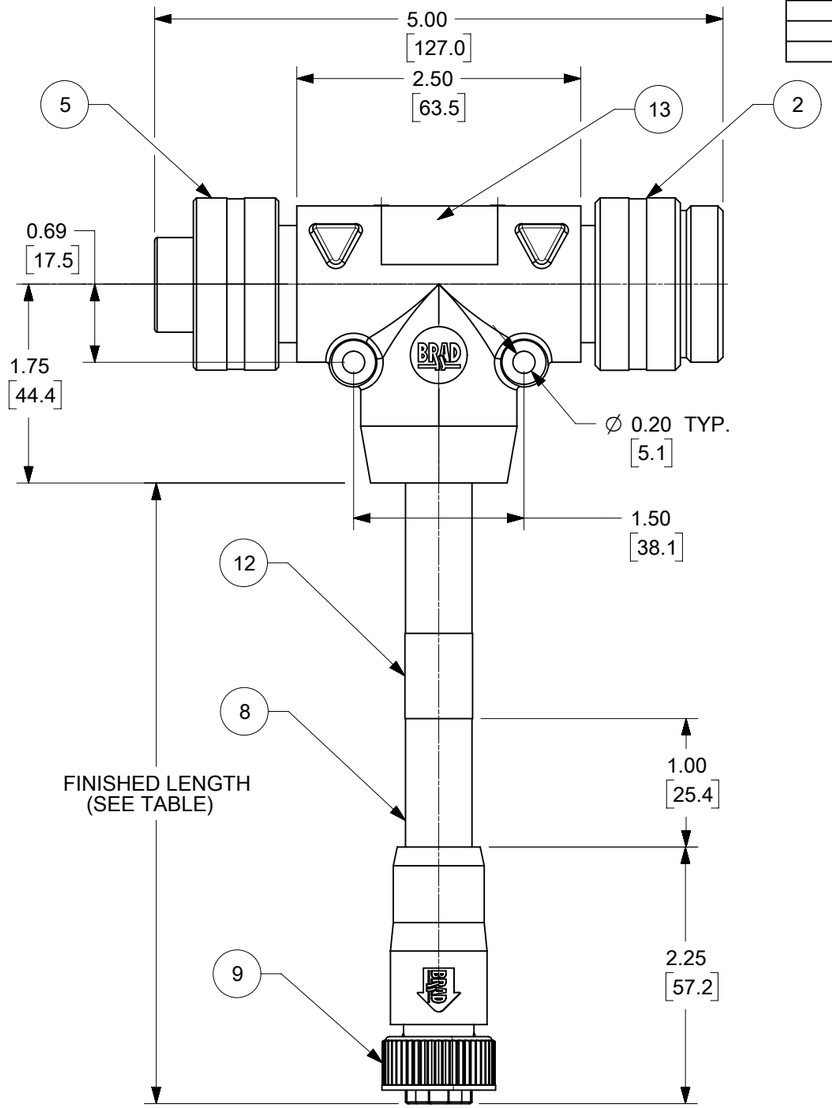

QC MALE FACE VIEW

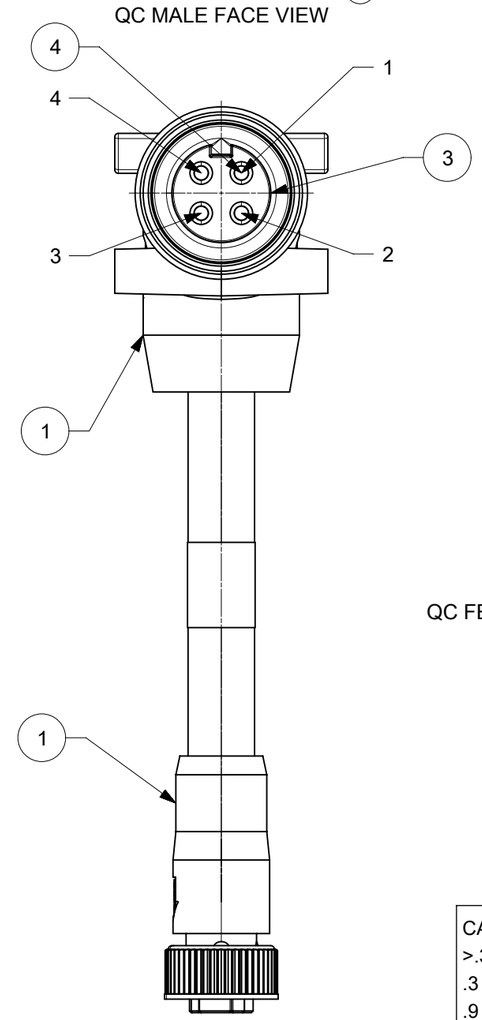

TC40300K27M010G

FINISHED LENGTH
M001 = 0.1 METER
M010 = 1 METER
M100 = 10 METER

CABLE TYPE:
A56 - 14AWG TC-ER BLACK TPE
A79 - 14AWG TC-ER GRAY TPE-FLEX RATED
K27 - 14AWG TC-ER BLACK TPE-HI FLEX

NOTES:
1. MATERIAL: AS NOTED
2. FINISH: AS NOTED
3. ELECTRICAL:
   VOLTAGE: 600V AC/DC
   MAX THRU CURRENT: 25A
   MAX DROP CURRENT: 15A
4. PROTECTION: IP67 (WHEN MATED)
5. AGENCY CERTIFICATIONS:
   UL 2237 LISTED, FILE E258922
6. TEMP RANGE: -20°C TO 90°C
7. ALL DIMS ARE FOR REFERENCE
   UNLESS NOTED OTHERWISE
8. COUPLING THREADS:
   QC: 1 3/8-16
   MC: 7/8-16
9. MATES WITH: MC ALT-KEY AND QC 4P

SCHEMATIC

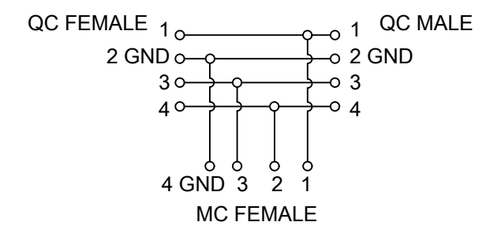

13	P/N LABEL	VINYL	BLACK/YELLOW
12	WARNING LABEL	VINYL	BLACK/ORANGE
11	MC SOCKET CONTACT	CU ALLOY	GOLD PLATED
10	MC FEMALE INSERT	PVC	BLACK
9	MC COUPLING NUT	ZINC ALLOY	BLACK E-COAT
8	CABLE, 14 AWG-4 TYPE TC-ER, STOOW	PVC	SEE CHART
7	QC SOCKET CONTACT	CU ALLOY	GOLD PLATED
6	QC FEMALE INSERT	PVC	BLACK
5	QC FEMALE COUPLING NUT	ALUMINUM	CLEAR ANODIZE
4	QC PIN CONTACT	CU ALLOY	GOLD PLATED
3	QC MALE INSERT	PVC	BLACK
2	QC MALE COUPLING NUT	ALUMINUM	CLEAR ANODIZE
1	OVERMOLD	PVC	BLACK
#	DESCRIPTION	MATERIAL	FINISH

DOCUMENT STATUS	P1	RELEASE DATE	2019/10/25 19:14:18

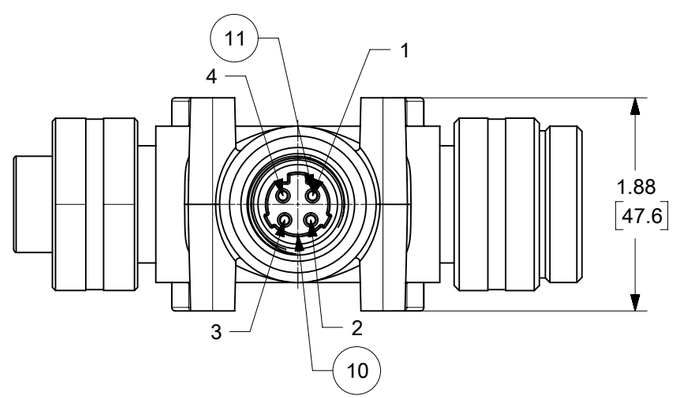

MC FEMALE FACE VIEW

CABLE LENGTH TOLERANCES
>.3M [1FT]: +19mm-0 [+.75in-0]
.3 - .9M [1 - 3FT]: +44.5mm-0 [+1.75in-0]
.9 - 1.8M [3 - 6FT]: +55.6mm-0 [+2.19in-0]
1.8 - 3.7M [6 - 12FT: +88.9mm-0 [+3.50in-0]
3.7 - 7.3M [12 - 24FT]: +165.1mm-0 [+6.50in-0]
7.3-14.6M [24 - 48FT]: +317.5mm-0 [+12.50in-0]
14.6 - 30.5M [48-100FT]: +622.3mm-0 [+24.50in-0]
OVER 30M [100FT] +2% OF FINISHED LENGTH

SYMBOLS

THIS DRAWING CONTAINS INFORMATION THAT IS PROPRIETARY TO MOLEX ELECTRONIC TECHNOLOGIES, LLC AND SHOULD NOT BE USED WITHOUT WRITTEN PERMISSION

DIMENSION UNITS	SCALE
INCH/MM	1:1.333333

GENERAL TOLERANCES (UNLESS SPECIFIED)

ANGULAR TOL	±	0.5 °
4 PLACES	±	
3 PLACES	±	
2 PLACES	±	0.13
1 PLACE	±	0.25
0 PLACES	±	

DRAFT WHERE APPLICABLE MUST REMAIN WITHIN DIMENSIONS

CURRENT REV DESC: UPDATE E NUMBER, UPDATE TO NX

EC NO: 626221
DRWN: CCHRASTKA 2019/10/23
CHK'D: MZIELINSKI 2019/10/23
APPR: BWOODMAN 2019/10/25

INITIAL REVISION:
DRWN: BRUPERT 2011/11/02
APPR: JFMURPHY 2012/03/20

THIRD ANGLE PROJECTION | DRAWING: B-SIZE | SERIES: 130068

molex

BRAD POWER
QC 4 POLE CABLED TEE W/4POLE MC ALT KEY

PRODUCT CUSTOMER DRAWING

DOCUMENT NUMBER	DOC TYPE	DOC PART	REVISION
SD-130068-018	PSD	001	C

MATERIAL NUMBER	CUSTOMER	SHEET NUMBER
	GENERAL MARKET	1 OF 1

FORMAT: master-tb-prod-B
REVISION: H
DATE: 2018/01/18