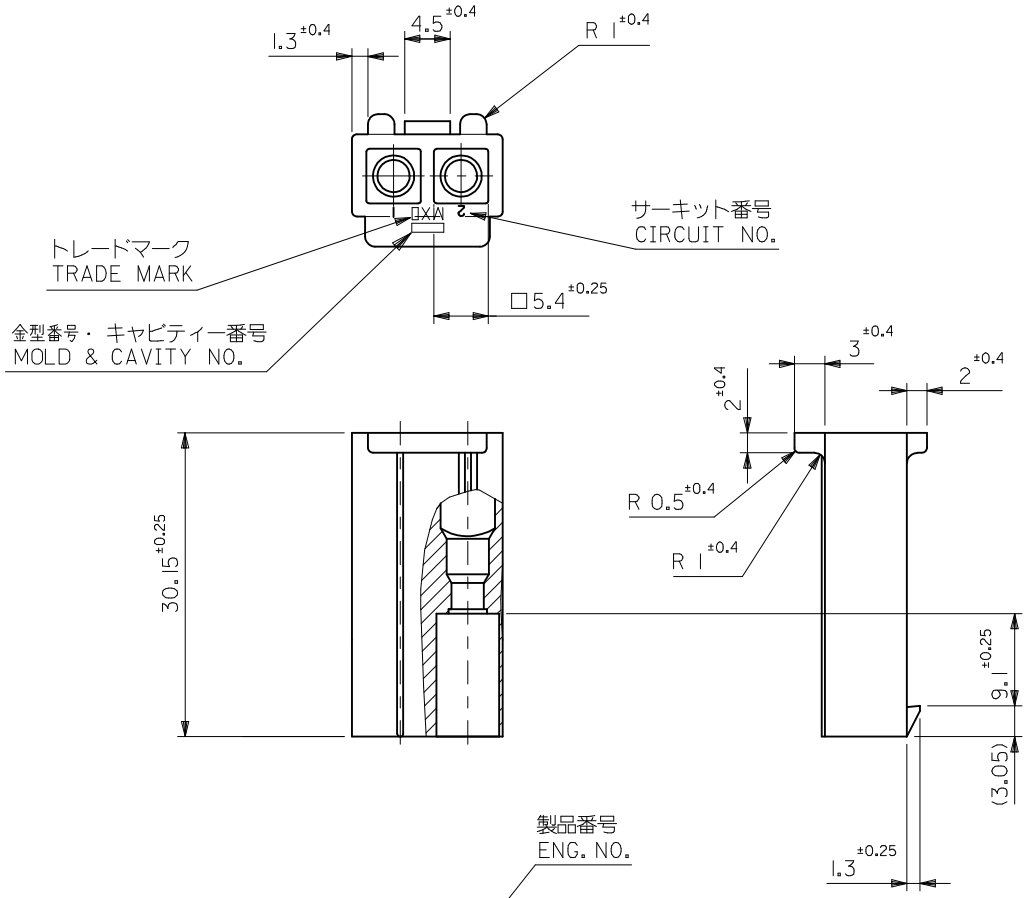

注記
NOTE
1. (　　) 内寸法は参考値
DIMENSIONS IN ( ) ARE REFERENCE
2. 材料 ： ナイロン66
MATERIAL : NYLON66

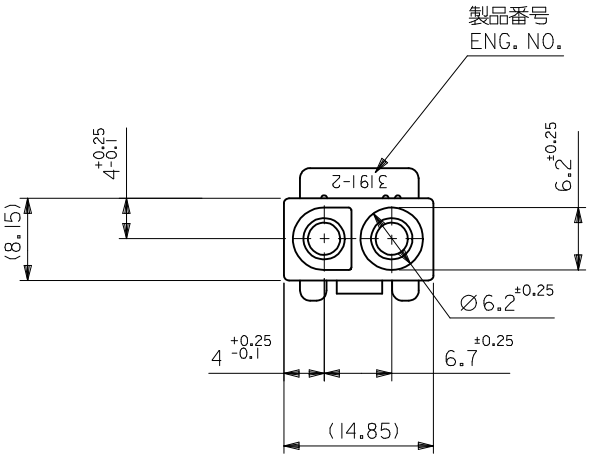

RED	39-01-9024	3191-02P1-RE	94V-2
BLUE	39-01-9023	3191-02P1-BU	94V-2
NATURAL	39-03-6023	3191-02P1-201	94V-0
NATURAL	39-03-6022	3191-02P1	94V-2
色 COLOR	POLYBAG PACKAGE / オーダー番号 ORDER NO.	モデル番号 MODEL NO.	UL

REDRAWN
EC NO: J2013-0829
DRWN:KWASHIO 2013/01/31
CH'KD:KASAKAWA 2013/01/31
APPR:YOITO 2013/04/16
REV 0
DESCRIPTION

GENERAL TOLERANCES (UNLESS SPECIFIED)

10 UNDER	± ---
10 OVER 30 UNDER	± ---
30 OVER	± ---
ANGULAR	± --- °

DRAFT WHERE APPLICABLE MUST REMAIN WITHIN DIMENSIONS

DIMENSION STYLE: MM ONLY
SCALE: ---
DESIGN UNITS: METRIC
THIRD ANGLE PROJECTION

DRAWN BY: KWASHIO DATE: 2013/01/31
CHECKED BY: KASAKAWA DATE: 2013/01/31
APPROVED BY: YOITO DATE: 2013/04/16

TITLE: 2 CKT PLUG HSG (.093 DIA TERM)

molex

MATERIAL NO.: SEE TABLE
DOCUMENT NO.: SD-3191-009
SHEET NO.: 1 OF 1
SIZE: A3

THIS DRAWING CONTAINS INFORMATION THAT IS PROPRIETARY TO MOLEX INCORPORATED AND SHOULD NOT BE USED WITHOUT WRITTEN PERMISSION