RADIALL The next conneXion

TECHNICAL DATA SHEET

282 970

Series	POSITIONER PER M22520/2-23	Issue: Jul 07, 2006	Page 1/1

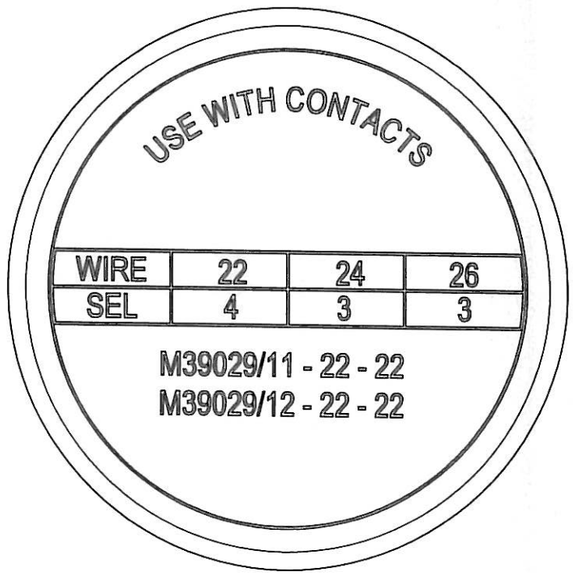

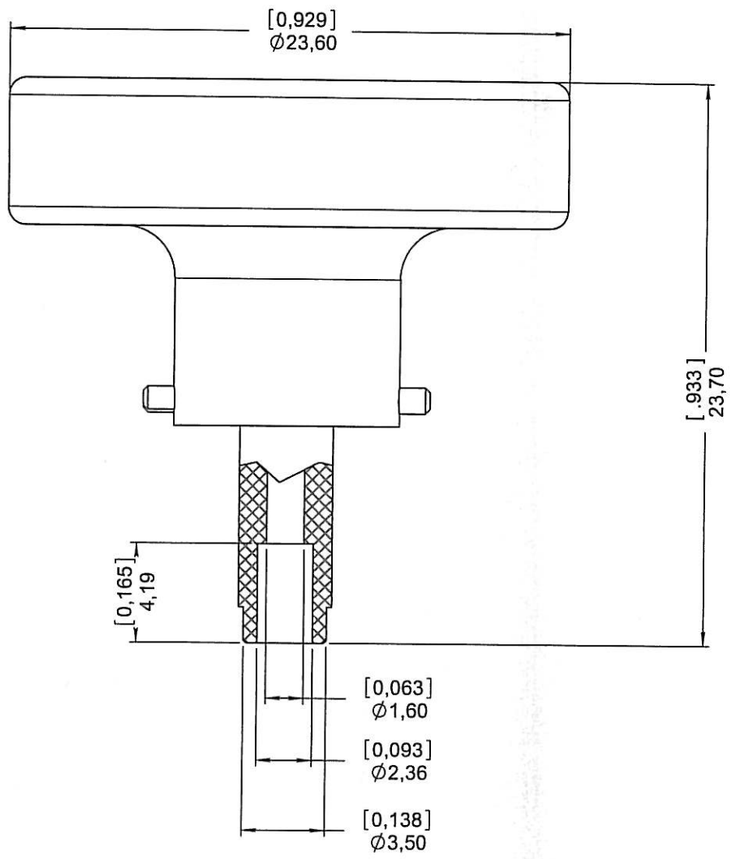

Use with crimping tool RADIALL P/N 282 281

DIMENSIONS : mm (inch are given for information only)

CREATION				
PEN:				
NOM: ARNAULT F.				
DATE: Jul 07, 2006				
APPR.: Valgrey	/	/	/	/
	Issue	Revisions	Name	Approved

This information is given as an indication.In the continual goal to improve our products,we reserve the right to make any modifications judged necessary.

4112_9311

RADIALL PROPRIETARY INFORMATION