Click here for production status of specific part numbers.

MAX4995A/AF/AL/ MAX4995B/MAX4995C

50mA to 600mA Programmable Current-Limit Switches

General Description

The MAX4995A/MAX4995AF/MAX4995AL/MAX4995B/MAX4995C programmable current-limit switches feature internal current limiting to prevent damage to host devices due to faulty load conditions. These analog switches feature a low 130mΩ (typ) on-resistance and operate from a +1.7V to +5.5V input voltage range. The current limit is adjustable from 50mA to 600mA, making these devices ideal for SDIO (secure digital input/output) and other load-switching applications.

Each device in the family handles an overcurrent event differently depending on the option selected. The MAX4995A/MAX4995AF/MAX4995AL go into an autoretry mode, the MAX4995B latches off the switch, and the MAX4995C places the device in a continuous current-limit mode. Additional safety features include thermal shutdown to prevent overheating and reverse-current blocking to prevent current from being driven back into the source.

The MAX4995A/MAX4995AF/MAX4995AL/MAX4995B/MAX4995C are available in a tiny 10-pin, 1.4mm x 1.8mm UTQFN, a 6-pin SOT23, or an 8-pin, 2mm x 2mm TDFN package and operate over the -40°C to +125°C extended temperature range.

Features

- 50mA to 600mA Programmable Current Limit
- ±10% Accurate Current Limit
- Overload $\overline{\text{FLAG}}$ Threshold
- Low Dropout Voltage
- Short-Circuit Protection
- Thermal Shutdown
- Reverse-Current Protection
- 170µA (typ) Supply Current
- +1.7V to +5.5V Supply Voltage Range
- Tiny 10-Pin, 1.4mm x 1.8mm UTQFN Package

Applications

- SDIO Ports
- USB Ports
- Notebook VGA Ports
- GPS
- Cell Phones
- MP3 Players
- UTCA/ATCA Platforms

***Typical Operating Circuit* appears at end of data sheet.**

Ordering Information/Selector Guide

PART	PIN-PACKAGE	ON POLARITY	OVERCURRENT RESPONSE	SHORT-CIRCUIT RESPONSE	TOP MARK
MAX4995AAUT+T*	6 SOT23	Active-High	Autoretry	Normal	+ACNZ
MAX4995AAVB+T	10 UTQFN	Active-High	Autoretry	Normal	+AAM
MAX4995AATA+T	8 TDFN-EP**	Active-High	Autoretry	Normal	+ABL
MAX4995AFAUT+T*	6 SOT23	Active-High	Autoretry	Fast	+ACOE
MAX4995AFAVB+T	10 UTQFN	Active-High	Autoretry	Fast	+AAR
MAX4995AFATA+T*	8 TDFN-EP**	Active-High	Autoretry	Fast	+ACO
MAX4995ALAUT+T*	6 SOT23	Active-Low	Autoretry	Normal	+ACOA
MAX4995ALAVB+T	10 UTQFN	Active-Low	Autoretry	Normal	+AAN
MAX4995ALATA+T*	8 TDFN-EP**	Active-Low	Autoretry	Normal	+ABM
MAX4995BAUT+T*	6 SOT23	Active-High	Latchoff	Normal	+ACOB
MAX4995BAVB+T	10 UTQFN	Active-High	Latchoff	Normal	+AAO
MAX4995BATA+T*	8 TDFN-EP**	Active-High	Latchoff	Normal	+ABN
MAX4995CAUT+T*	6 SOT23	Active-High	Continuous	Normal	+ACOD
MAX4995CAVB+T	10 UTQFN	Active-High	Continuous	Normal	+AAQ
MAX4995CATA+T*	8 TDFN-EP**	Active-High	Continuous	Normal	+ABP

All devices operate over the -40°C to +125°C temperature range.
+Denotes a lead(Pb)-free/RoHS-compliant package.
T = Tape and reel.
**Future product. Contact factory for availability.*
***EP = Exposed pad.*

19-4363; Rev 3; 10/19

maxim integrated™

Absolute Maximum Ratings

IN, ON, $\overline{ON}$, $\overline{FLAG}$, OUT, and SETI to GND.....-0.3V to +6V
Current into Any Pin (Except IN, OUT) 20mA
OUT Short-Circuit to GND.....800mA
Continuous Power Dissipation (T_A = +70°C) (Note 1)
10-Pin UTQFN (derate 6.99mW/°C above T_A = +70°C) 559mW
6-Pin SOT23 (derate 13.4mW/°C above T_A = +70°C) 1072.4mW
8-Pin TDFN (derate 11.9mW/°C above T_A = +70°C).....953.5mW
Junction-to-Ambient Thermal Resistance (θ_{JA})
(Note 2).....143.1°C/W
Operating Temperature Range..... -40°C to +125°C
Storage Temperature Range..... -65°C to +150°C
Junction Temperature.....+150°C
Lead Temperature (soldering, 10s) .....+300°C

Note 1: These power limits are defined by the thermal characteristics of the package, maximum function temperature (+150°C), and the JEDEC51-7 defined setup. Maximum power dissipation could be lower, limited by the thermal-shutdown protection included in this IC.

Note 2: Package thermal resistances were obtained using the method described in JEDEC specification JESD51-7, using a four-layer board. For detailed information on package thermal considerations, refer to **www.maximintegrated.com/thermal-tutorial**.

Stresses beyond those listed under "Absolute Maximum Ratings" may cause permanent damage to the device. These are stress ratings only, and functional operation of the device at these or any other conditions beyond those indicated in the operational sections of the specifications is not implied. Exposure to absolute maximum rating conditions for extended periods may affect device reliability.

Package Information

10 UTQFN

Package Code	V101A1CN+1
Outline Number	**21-0028**

6 SOT23

Package Code	U6SN+1
Outline Number	**21-0058**

8 TDFN

Package Code	T822+1
Outline Number	**21-0168**

For the latest package outline information and land patterns (footprints), go to **www.maximintegrated.com/packages**. Note that a "+", "#", or "-" in the package code indicates RoHS status only. Package drawings may show a different suffix character, but the drawing pertains to the package regardless of RoHS status.

Package thermal resistances were obtained using the method described in JEDEC specification JESD51-7, using a four-layer board. For detailed information on package thermal considerations, refer to **www.maximintegrated.com/thermal-tutorial**.

Electrical Characteristics

(V_{IN} = +1.7V to +5.5V, R_{SETI} = 94.3kΩ, C_{IN} = 1µF, and T_A = T_J = -40°C to +125°C, unless otherwise noted. Typical values are at V_{IN} = +3.3V, T_A = +25°C.)

PARAMETER	SYMBOL	CONDITIONS	MIN	TYP	MAX	UNITS
SUPPLY OPERATION						
Operating Voltage	V_{IN}		1.7		5.5	V
Quiescent Current	I_Q	I_{OUT} = 0, switch on, V_{IN} = 3.3V		170	300	µA
Latchoff Current	I_{LATCH}	V_{IN} = 3.3V, I_{OUT} = 0 after an overcurrent fault (MAX4995B)		8	15	µA
Shutdown Forward Current	I_{SHDN}	V_{ON} = 0, $V_{\overline{ON}}$ = V_{IN}, V_{IN} = 5.5V, V_{OUT} = 0		0.01	5	µA
Shutdown Reverse Current	I_{RSHDN}	V_{ON} = 0, $V_{\overline{ON}}$ = V_{IN}, V_{IN} = 1.7V, V_{OUT} = 5.5V (current into OUT)		0.01	1	µA
INTERNAL FET						
Switch-On Resistance	R_{ON}	V_{IN} = 3.3V, I_{OUT} lower than I_{LIM}		130	350	mΩ
Normalized Current-Limit Accuracy		I_{LIM} = 50mA to 600mA, V_{IN} - V_{OUT} = 1V, V_{IN} = 3.3V (Note 3)	0.9	1	1.1	—
(R_{SETI} + 2.48) x I_{LIM} Product		I_{LIM} = 50mA to 600mA, V_{IN} - V_{OUT} = 1V, V_{IN} = 3.3V	26138	29042	31946	V
Reverse Blocking Current		V_{OUT} > V_{IN} + 300mV after reverse-current-limit shutdown			10	µA
Reverse Blocking Threshold		V_{OUT} = V_{IN} + 300mV, OUT falling until switch turns on	35	110	210	mV
$\overline{FLAG}$ Assertion Drop Voltage Threshold	VFA	Increase (V_{IN} - V_{OUT}) drop until $\overline{FLAG}$ asserts, I_{OUT} limiting, VIN = 3.3V		650		mV
ON, $\overline{ON}$ INPUT						
ON, $\overline{ON}$ Input Leakage	I_{LEAK}	V_{ON}, $V_{\overline{ON}}$ = V_{IN} or GND	-1		+1	µA
ON, $\overline{ON}$ Input Logic-High Voltage	V_{IH}		1.6			V
ON, $\overline{ON}$ Input Logic-Low Voltage	V_{IL}				0.4	V
$\overline{FLAG}$ OUTPUT						
$\overline{FLAG}$ Output Logic-Low Voltage		I_{SINK} = 1mA			0.4	V
$\overline{FLAG}$ Output Leakage Current		V_{IN} = $V_{\overline{FLAG}}$ = 5.5V, $\overline{FLAG}$ deasserted			1	µA
DYNAMIC						
Turn-On Time	t_{SS}	V_{IN} = 3.3V, C_{OUT} = 1µF, R_L = 20Ω, Figure 1, (Note 4)		120		µs
Turn-Off Time	t_{OFF}	Switch from on to off, V_{IN} = 3.3V, C_{OUT} = 1µF, R_L = 20Ω, Figure 1 (Note 4)		120		µs
Current-Limit Reaction Time	t_{LIM}	V_{IN} = 3.3V, R_{SETI} = 578kΩ, output high and then short-circuit applied — MAX4995A/AL/B/C		5		µs
		V_{IN} = 3.3V, R_{SETI} = 578kΩ, output high and then short-circuit applied — MAX4995AF		1.5		µs
Blanking Time	t_{BLANK}	(Note 5)	10	16.3	22.6	ms
Retry Time	t_{RETRY}	MAX4995A/MAX4995AF/MAX4995AL (Note 5)	320		723.2	ms
THERMAL PROTECTION						
Thermal Shutdown				+150		°C
Thermal-Shutdown Hysteresis				15		°C

Electrical Characteristics (continued)

(V_{IN} = +1.7V to +5.5V, R_{SETI} = 94.3kΩ, C_{IN} = 1µF, and T_A = T_J = -40°C to +125°C, unless otherwise noted. Typical values are at V_{IN} = +3.3V, T_A = +25°C.)

Note 3: I_{LIM} is forward current limit.

$$I_{LIM}(mA) = \frac{29042(V)}{R_{SETI}(k\Omega) + 2.48(k\Omega)}$$

Note 4: Turn-on time and turn-off time are defined as the difference in the time between when the output crosses 10% and 90% of the final output voltage.

Note 5: Blanking time and retry time are generated by the same oscillator. Therefore, the ratio of

$$\frac{t_{RETRY}}{t_{BLANK}}$$

is a constant value of 32. See Figure 2 and 3.

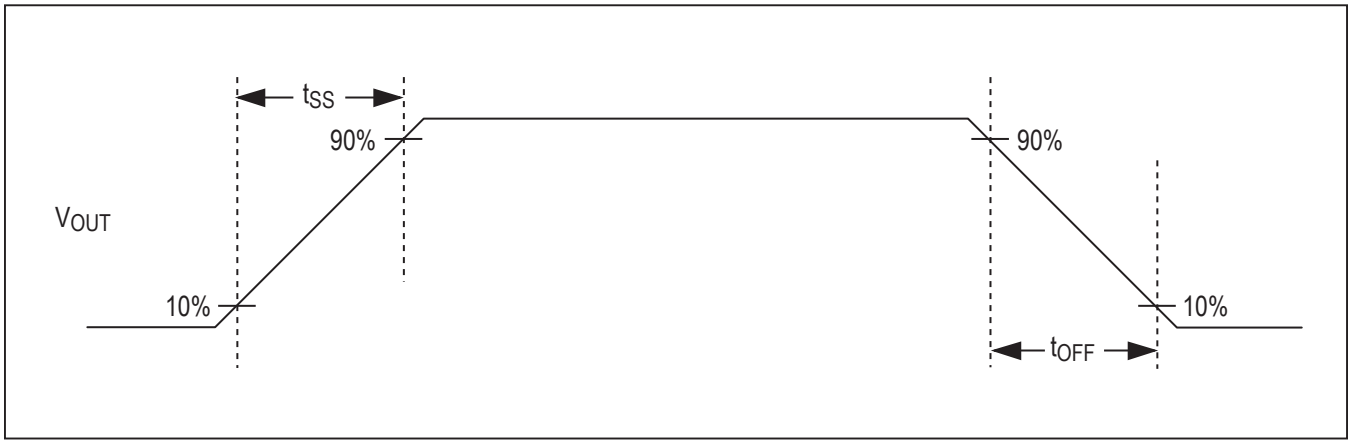

Figure 1. Timing Diagram for Measuring Turn-On Time (t_{SS}) and Turn-Off Time (t_{OFF}).

Typical Operating Characteristics

(V_{IN} = +3.3V, C_{IN} = 1µF, C_{OUT} = 1µF, R_{SETI} = 94.2kΩ, T_A = +25°C, unless otherwise noted.)

CURRENT LIMIT vs. SUPPLY VOLTAGE

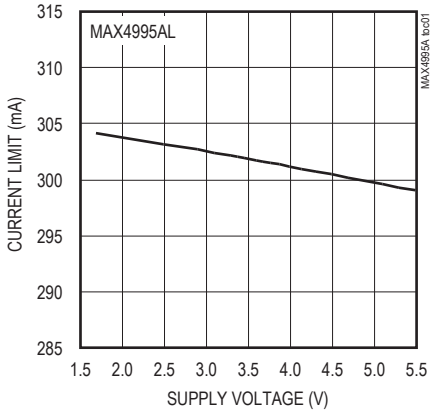

NORMALIZED CURRENT LIMIT vs. TEMPERATURE

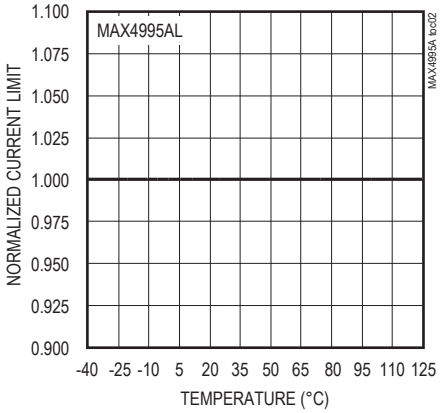

CURRENT-LIMIT RESPONSE (MAX4995A)

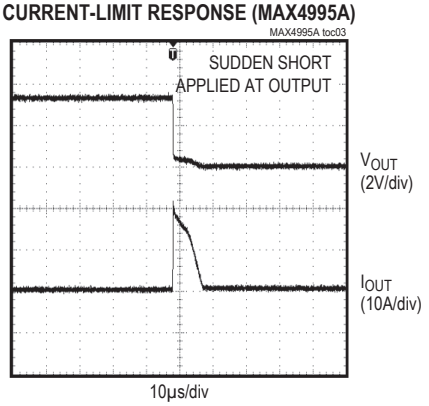

CURRENT-LIMIT RESPONSE (MAX4995AF)

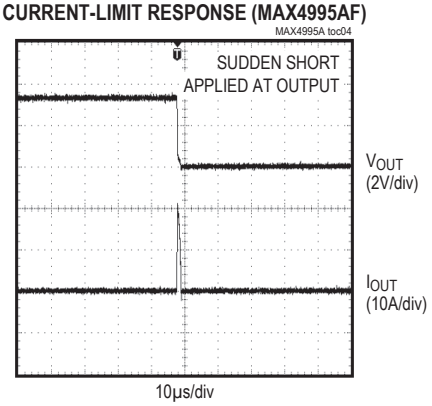

CURRENT-LIMIT RESPONSE

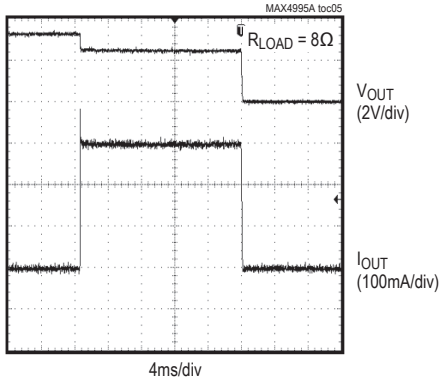

QUIESCENT SUPPLY CURRENT vs. SUPPLY VOLTAGE

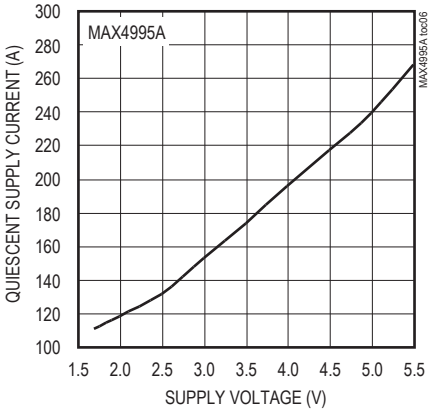

Typical Operating Characteristics (continued)

(V_{IN} = +3.3V, C_{IN} = 1µF, C_{OUT} = 1µF, R_{SETI} = 94.2kΩ, T_A = +25°C, unless otherwise noted.)

QUIESCENT SUPPLY LIMIT vs. TEMPERATURE

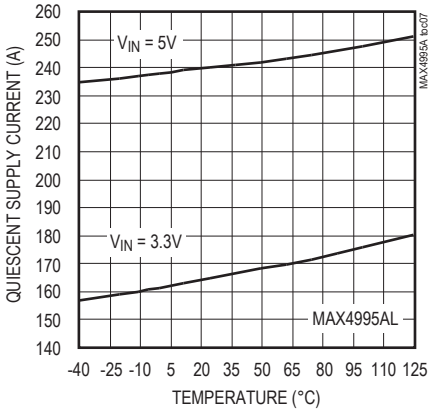

SHUTDOWN SUPPLY CURRENT vs. TEMPERATURE

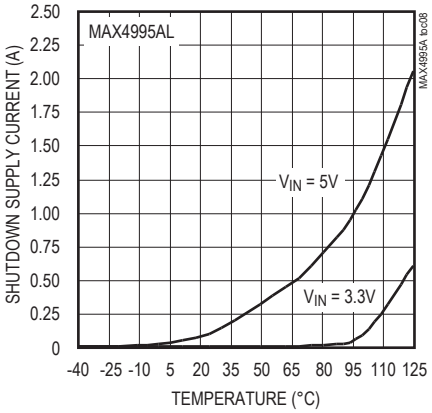

SHUTDOWN FORWARD CURRENT vs. TEMPERATURE

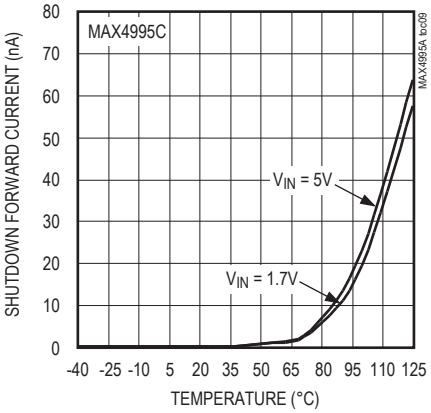

SHUTDOWN REVERSE CURRENT vs. TEMPERATURE

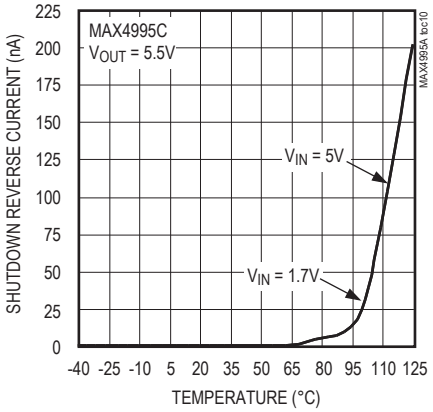

LATCHOFF CURRENT vs. TEMPERATURE

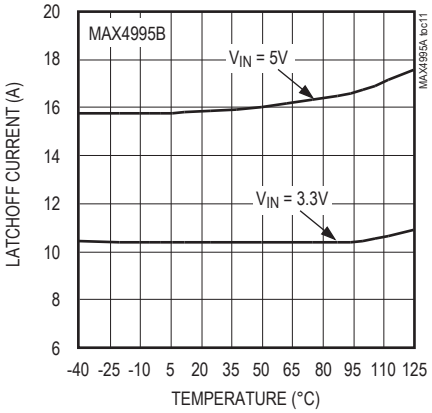

NORMALIZED ON-RESISTANCE vs. SUPPLY VOLTAGE

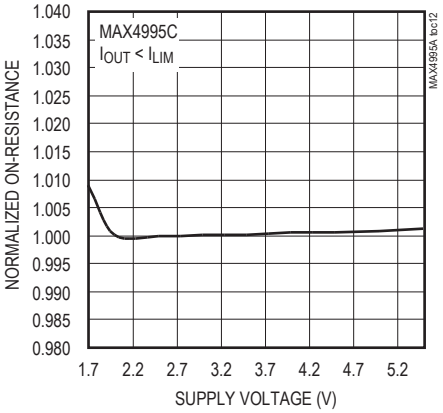

NORMALIZED ON-RESISTANCE vs. TEMPERATURE

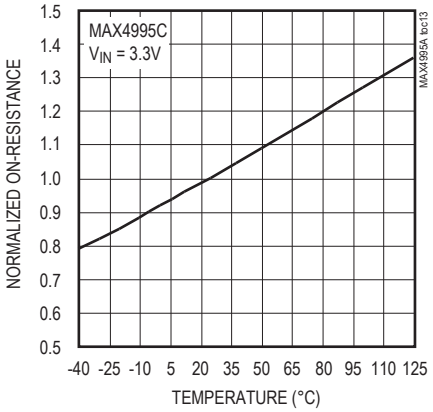

SWITCH TURN-ON TIME vs. TEMPERATURE

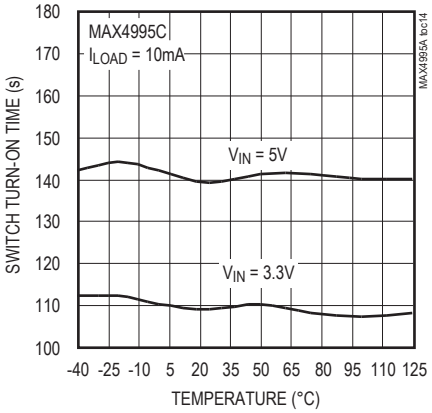

SWITCH TURN-OFF TIME vs. TEMPERATURE

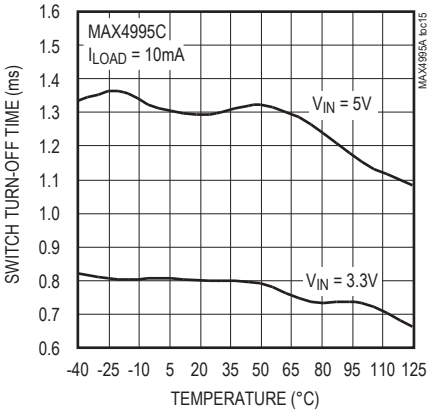

Typical Operating Characteristics (continued)

(V_{IN} = +3.3V, C_{IN} = 1µF, C_{OUT} = 1µF, R_{SETI} = 94.2kΩ, T_A = +25°C, unless otherwise noted.)

SWITCH TURN-ON TIME RESPONSE

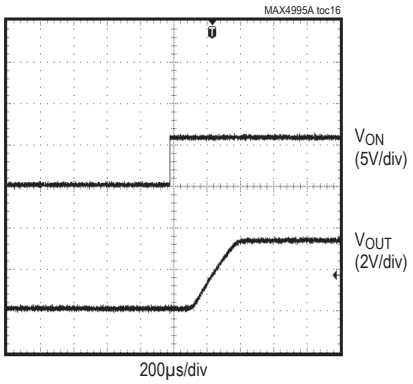

SWITCH TURN-OFF TIME RESPONSE

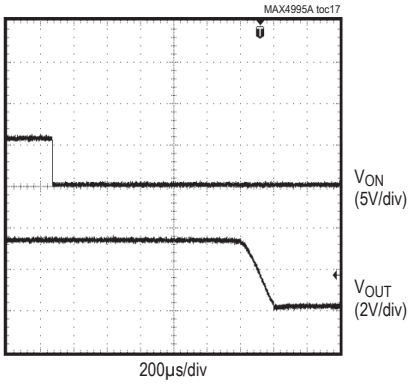

$\overline{FLAG}$ RESPONSE (OVERLOAD) CONDITION

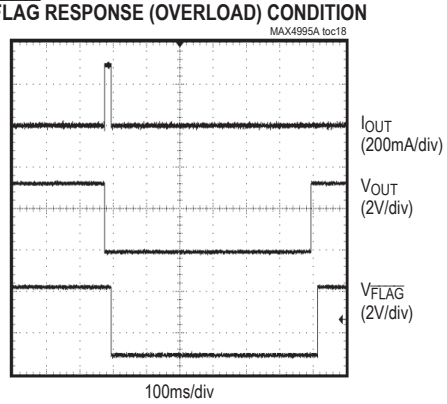

SWITCH DROPOUT VOLTAGE vs. TEMPERATURE

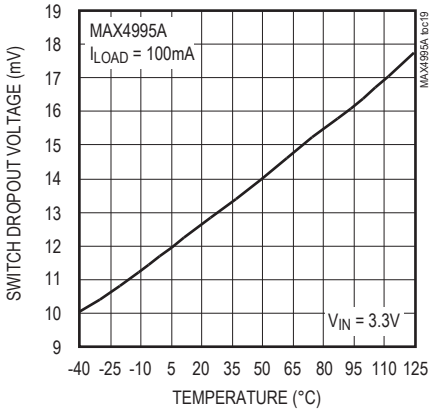

I_{OUT}/$\overline{FLAG}$ vs. V_{DROP} (V_{IN} - V_{OUT})

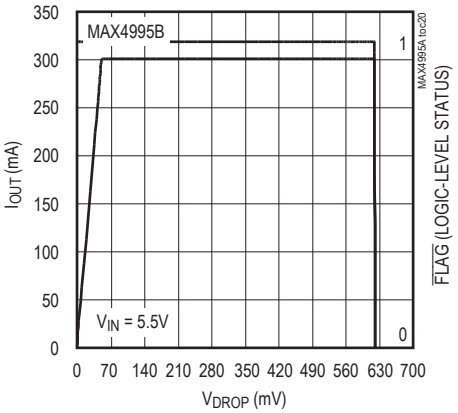

Pin Configurations

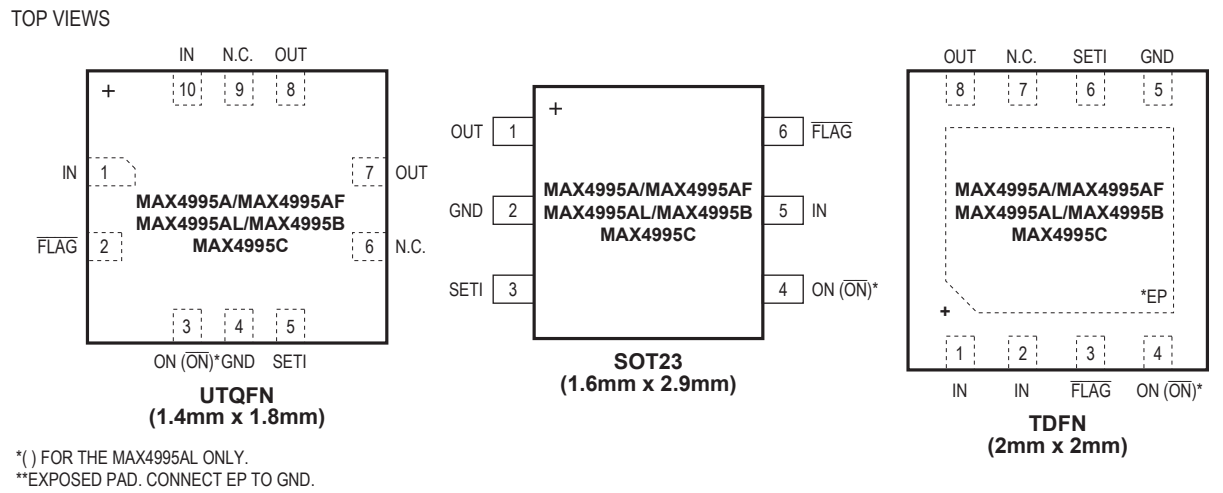

*( ) FOR THE MAX4995AL ONLY.
**EXPOSED PAD. CONNECT EP TO GND.

Pin Description

PIN (UTQFN)		PIN (TDFN-EP)		PIN (SOT23)		NAME	FUNCTION
MAX4995AL	MAX4995_	MAX4995AL	MAX4995_	MAX4995AL	MAX4995_		
1, 10	1, 10	1, 2	1, 2	5	5	IN	Power Input. Bypass IN with a 1µF ceramic capacitor to ground. Use higher capacitance to prevent large load transients from pulling down the supply voltage if necessary. Connect both power inputs (IN) together.
2	2	3	3	6	6	$\overline{\text{FLAG}}$	Open-Drain, Overload Indicator Output. $\overline{\text{FLAG}}$ goes low when the overload fault duration exceeds the blanking time, reverse current is detected, thermal shutdown mode is active, or SETI is connected to ground.
3	—	4	—	4	—	$\overline{\text{ON}}$	Active-Low, Switch-On Input. Drive $\overline{\text{ON}}$ low to turn on the switch.
—	3	—	4	—	4	ON	Active-High, Switch-On Input. Drive ON high to turn on the switch.
4	4	5	5	2	2	GND	Ground
5	5	6	6	3	3	SETI	Overload Current Limit Adjust. Connect a resistor from SETI to ground to program the overcurrent limit. Do not connect any capacitance larger than 20pF to SETI.

Pin Description (continued)

PIN (UTQFN)		PIN (TDFN-EP)		PIN (SOT23)		NAME	FUNCTION
MAX4995AL	MAX4995_	MAX4995AL	MAX4995_	MAX4995AL	MAX4995_		
6, 9	6, 9	7	7	—	—	N.C.	No Connect. Not internally connected.
7, 8	7, 8	8	8	1	1	OUT	Switch Output. Bypass OUT with a 1µF capacitor to ground. Connect both outputs (OUT) together.
—	—	—	—	—	—	EP	Exposed Pad. Connect EP to GND. For TDFN package only.

Functional Diagram

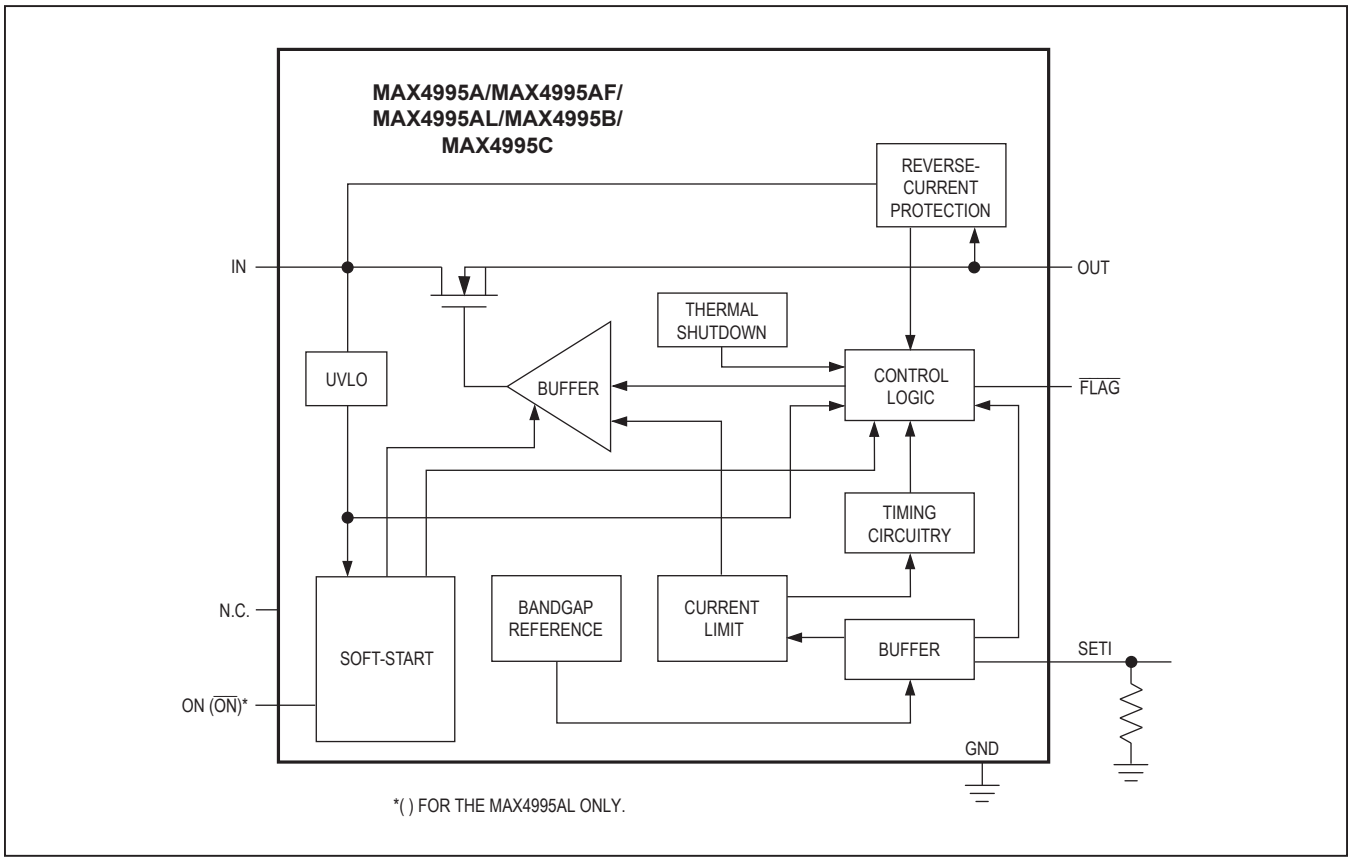

Detailed Description

The MAX4995A/MAX4995AF/MAX4995AL/MAX4995B/MAX4995C programmable current-limit switches operate from +1.7V to +5.5V and provide internal current limiting adjustable from 50mA to 600mA. These devices feature a fixed blanking time and a $\overline{FLAG}$ output that notifies the processor when a fault condition is present.

Programmable Current Limit

A resistor from SETI to GND programs the current limit for the switch (see the *Setting the Current Limit* section). If the output current exceeds the current limit for a time equal to or longer than t_{BLANK}, the output flag asserts and the MAX4995A/MAX4995AF/MAX4995AL enter the autoretry mode. The MAX4995B latches off the switch, and the MAX4995C enters the continuous current-limit mode.

Autoretry (MAX4995A/MAX4995AF/MAX4995AL)

When the forward current reaches the current-limit threshold, the t_{BLANK} timer begins counting (Figure 2). $\overline{FLAG}$ asserts if the overcurrent-limit condition is present for t_{BLANK}. The timer resets if the overcurrent condition disappears before the blanking time (t_{BLANK}) has elapsed. A retry time delay (t_{RETRY}) starts immediately after the blanking time has elapsed and during that time, the switch latches off. At the end of t_{RETRY}, the switch turns on again. If the fault still exists, the cycle repeats. If the fault has been removed, the switch stays on. During this cycle, $\overline{FLAG}$ stays low. In autoretry if the thermal power rating of the package is exceeded, the MAX4995A/MAX4995AF/MAX4995AL go into thermal shutdown.

The autoretry feature saves system power in case of an overcurrent or short-circuit condition. During t_{BLANK} time when the switch is on, the supply current is held at the current limit. During time t_{RETRY} when the switch is off, the current through the switch is zero. Thus, the average output current is much less than the programmed current limit. Calculate the average output current using the following equation:

$$I_{LOAD} = I_{LIM}\,[t_{BLANK}/(t_{BLANK} + t_{RETRY})]$$

With a typical t_{BLANK} = 16.3ms and typical t_{RETRY} = 524ms, the duty cycle is 3%, resulting in a 97% power savings over the switch being on the entire time.

Table 1. Switch Truth Table

MAX4995_/ MAX4995AF	MAX4995AL	SWITCH STATUS
ON	$\overline{ON}$	
0	1	Off
1	0	On

Latchoff (MAX4995B)

When the forward current reaches the current-limit threshold, the t_{BLANK} timer begins counting (Figure 3). $\overline{FLAG}$ asserts if an overcurrent-limit condition is present for greater than t_{BLANK} time. The timer resets if the overcurrent condition disappears before t_{BLANK} has elapsed. The switch turns off if the overcurrent condition continues beyond the blanking time. Reset the switch by either toggling the control logic (ON) or cycling the input voltage. If the thermal power rating of the package is exceeded during t_{BLANK}, the MAX4995B goes into thermal shutdown.

Continuous Current Limit (MAX4995C)

When the forward current reaches the forward currentlimit threshold, the MAX4995C limits the output current to the programmed current limit. $\overline{FLAG}$ asserts if the current limit is present for t_{BLANK} and deasserts when the overload condition is removed. In this mode, if the thermal power rating of the package is exceeded, the MAX4995C goes into thermal shutdown.

Switch-On/Off Control

The ON input for the MAX4995_/MAX4995AF and $\overline{ON}$ input for the MAX4995AL control the switch; see Table 1. Toggle ON for the MAX4995B to reset the fault condition once the short current is detected and the device shuts down.

Reverse-Current Protection

The MAX4995 features a reverse-current protection circuit that limits the backflow current to 10µA when the output voltage exceeds the input voltage by 110mV (typ). The switch turns off and $\overline{FLAG}$ asserts without waiting for t_{BLANK} to elapse. The switch turns back on and $\overline{FLAG}$ deasserts when the output voltage drops below the detecting threshold by 10mV (typ).

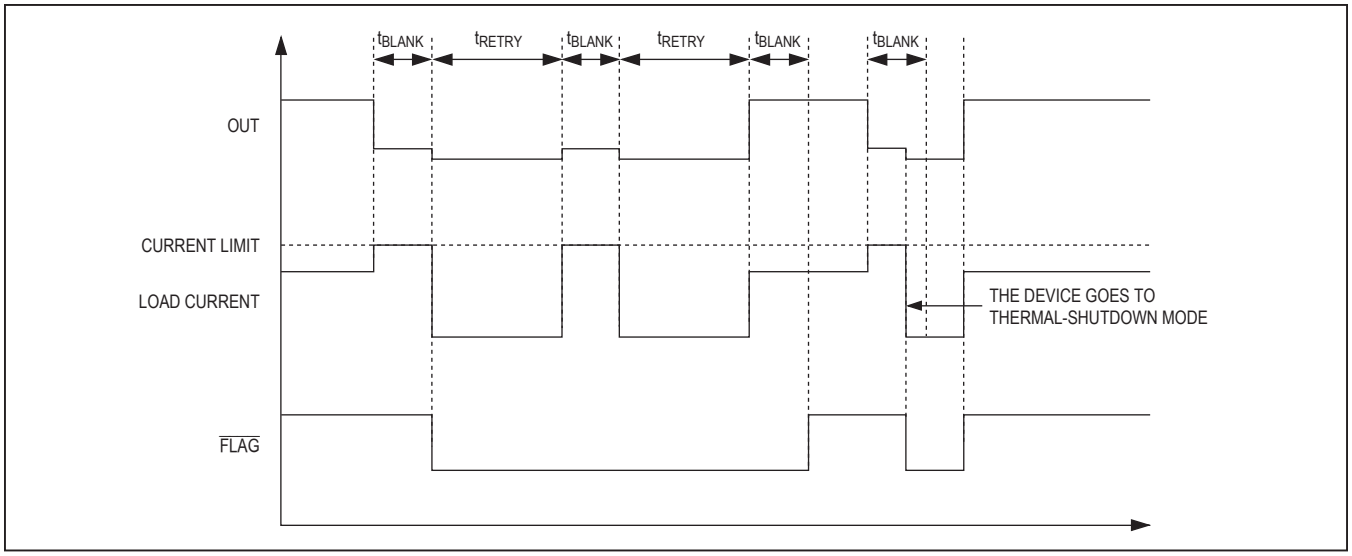

Figure 2. Autoretry Fault Diagram

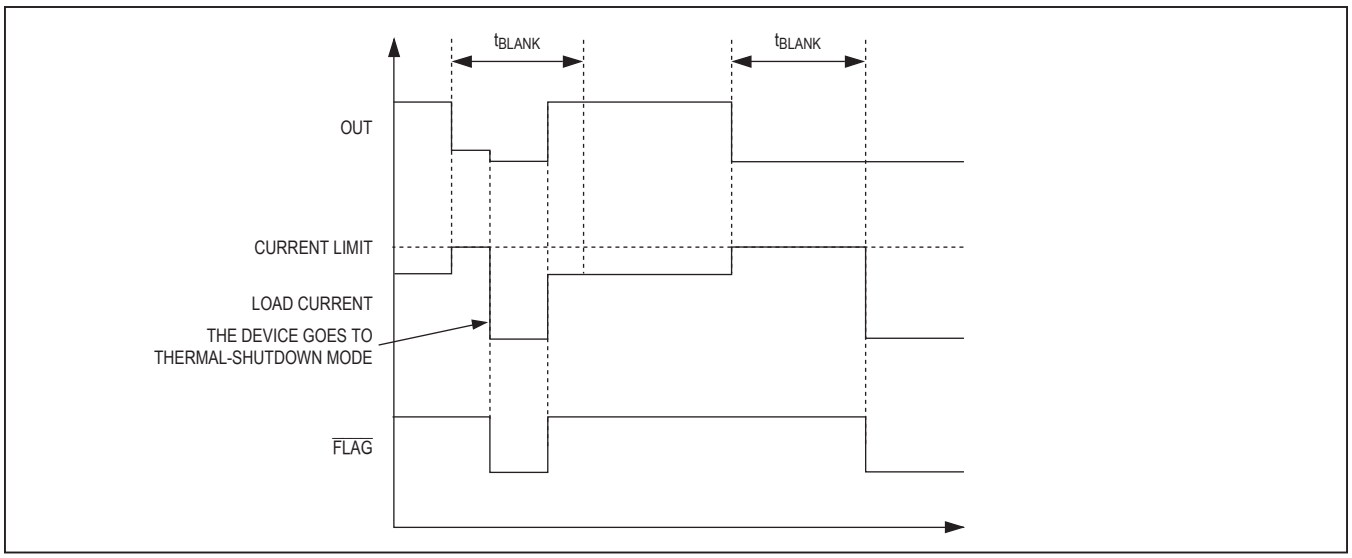

Figure 3. Latchoff Fault Diagram

$\overline{\text{FLAG}}$ Indicator

$\overline{\text{FLAG}}$ is an open-drain fault indicator output and requires an external pullup resistor to a DC supply. $\overline{\text{FLAG}}$ goes low when any of the following conditions occurs:

- The device is in current-limit mode.
- The OUT voltage is above the IN voltage by more than 110mV (typ).
- The die temperature exceeds the thermal-shutdown temperature limit of +150°C.
- SETI is connected to ground.

Thermal Shutdown

Thermal-shutdown circuitry protects the devices from overheating. The switch turns off and $\overline{\text{FLAG}}$ goes low immediately when the junction temperature exceeds +150°C (typ). The switch turns on again after the device temperature drops by approximately 15°C (typ).

Applications Information

Setting the Current Limit

A resistor from SETI to ground programs the current-limit value for the MAX4995. Table 2 lists various current limits set by different resistor values at SETI. Shorting SETI to ground asserts $\overline{FLAG}$.

Use the following formula to calculate the current limit:

$$R_{SETI}(k\Omega) = \frac{29042(V)}{I_{LIM}(mA)} - 2.48(k\Omega)$$

Using an R_{SETI} with a value smaller than 45.8kΩ results in a higher current limit. A programmed output current greater than 660mA can damage the device.

Connecting any capacitance larger than 20pF to SETI can cause instability.

Table 2. Current Limit vs. Resistor Values

R_{SETI} (kΩ)	TYPICAL CURRENT LIMIT (mA)
45.8	602
55.6	500
70.6	397
94.2	300
143	200
191	150
287	100
576	50
∞ (Open)	0

Input Capacitor

Connect a capacitor from IN to GND to limit the input voltage drop during momentary output short-circuit conditions. Use a 1µF minimum ceramic capacitor for proper device operation. Larger capacitor values reduce the voltage undershoot at the input.

Due to the very fast current-limit reaction time of the MAX4995AF, a larger input capacitance might need to be connected at the input to dampen oscillation due to long wires. Choose a value large enough to ensure IN doesn't exceed the absolute maximum ratings.

Output Capacitor

For stable operation over the full temperature range and over the full programmable current-limit range, use a 1µF ceramic capacitor from OUT to ground.

If the load capacitance is too large, then current may not have enough time to charge the capacitance and the device assumes that there is a faulty load condition. Calculate the maximum capacitive load (C_{MAX}) value that can be connected to OUT using the following formula:

$$C_{MAX}(\mu F) = \frac{I_{LIM}(mA) \times t_{BLANK(MIN)}(ms)}{V_{IN}(V)}$$

For example, for V_{IN} = 3.3V, $t_{BLANK(MIN)}$ = 10ms, and I_{LIM} = 300mA, C_{MAX} equals 909µF.

Due to the very fast current-limit reaction time of the MAX4995AF, a larger output capacitance might need to be connected at the output to dampen oscillation due to long wires. Choose a value large enough to ensure OUT doesn't exceed the absolute maximum ratings.

Layout and Thermal Dissipation

To optimize the switch response time to output short-circuit conditions, it is very important to keep all traces as short as possible to reduce the effect of undesirable parasitic inductance. Place input and output capacitors as close as possible to the device. IN and OUT must be connected with wide, short traces to the power bus. During normal operation, the power dissipation is small and the package temperature change is minimal. If the output is continuously shorted to ground at the maximum supply voltage, the operation of the switches with the autoretry option does not cause problems because the total power dissipated during the short is scaled by the duty cycle:

$$P_{MAX} = \frac{V_{IN(MAX)} \times I_{OUT(MAX)} \times t_{BLANK}}{t_{RETRY} + t_{BLANK}}$$

Attention must be given to the MAX4995C continuous current-limit version when the power dissipation during a fault condition may cause the device to reach thermal shutdown threshold.

Typical Operating Circuit

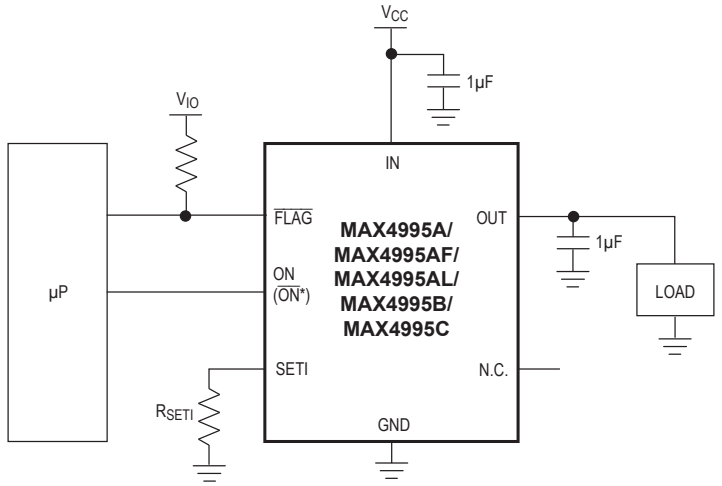

*( ) FOR THE MAX4995AL ONLY.

Chip Information

PROCESS: BiCMOS

Revision History

REVISION NUMBER	REVISION DATE	DESCRIPTION	PAGES CHANGED
0	1/15	Initial release.	—
1	6/09	Corrected the *Ordering Information/Selector Guide*.	1, 11
2	2/10	Added TDFN package information to the *Ordering Information/Selector Guide*, *Absolute Maximum Ratings*, *Pin Descriptio*n, and *Package Information* sections, added the TDFN pin configuration drawing to the *Pin Configurations* section.	1, 2, 7, 12
3	10/19	Updated the *Ordering Information/Selector Guide*.	1

For pricing, delivery, and ordering information, please visit Maxim Integrated's online storefront at https://www.maximintegrated.com/en/storefront/storefront.html.

Maxim Integrated cannot assume responsibility for use of any circuitry other than circuitry entirely embodied in a Maxim Integrated product. No circuit patent licenses are implied. Maxim Integrated reserves the right to change the circuitry and specifications without notice at any time. The parametric values (min and max limits) shown in the Electrical Characteristics table are guaranteed. Other parametric values quoted in this data sheet are provided for guidance.

Maxim Integrated and the Maxim Integrated logo are trademarks of Maxim Integrated Products, Inc. © 2019 Maxim Integrated Products, Inc.