THIS DRAWING IS UNPUBLISHED. RELEASED FOR PUBLICATION -,- .
© COPYRIGHT 2010 BY TYCO ELECTRONICS CORPORATION. ALL RIGHTS RESERVED.

LOC	DIST
DW	—

REVISIONS

P	LTR	DESCRIPTION	DATE	DWN	APVD
	C2	REVISED (ECR-11-011338) UPDATED NOTE 3 & ADDED NOTE 5	31MAR'11	E.L.	W.K.

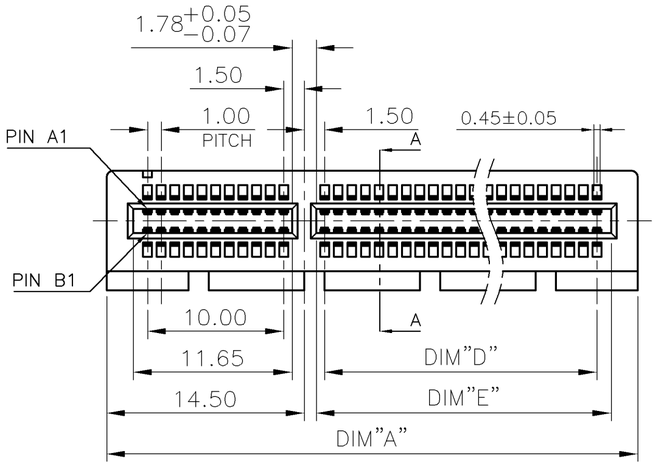

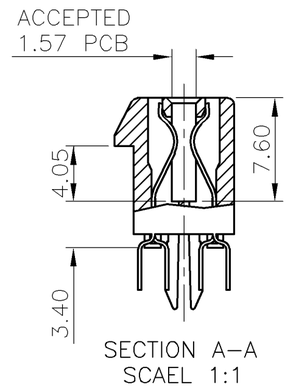

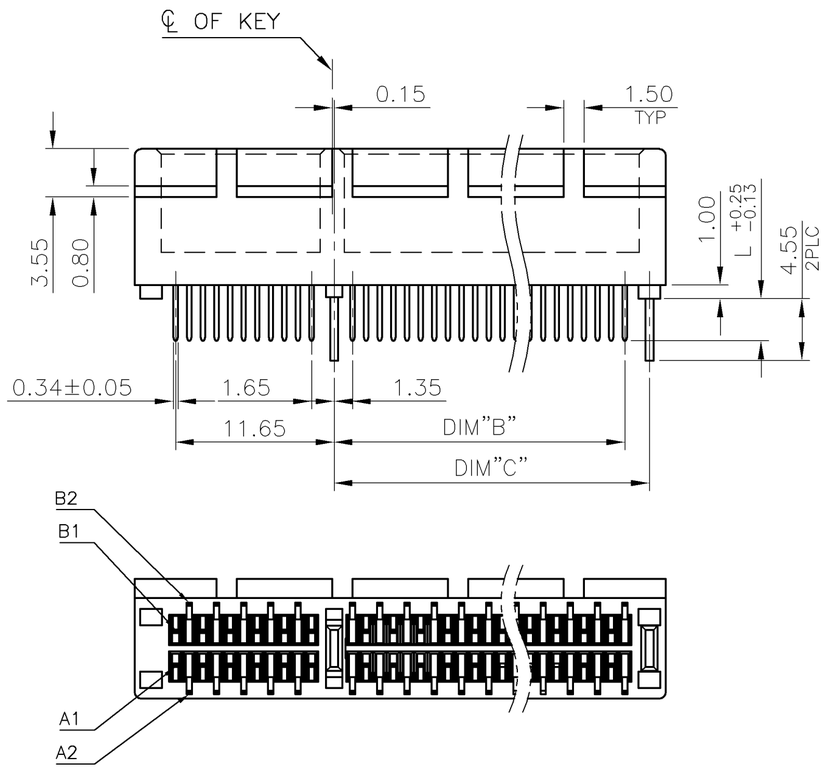

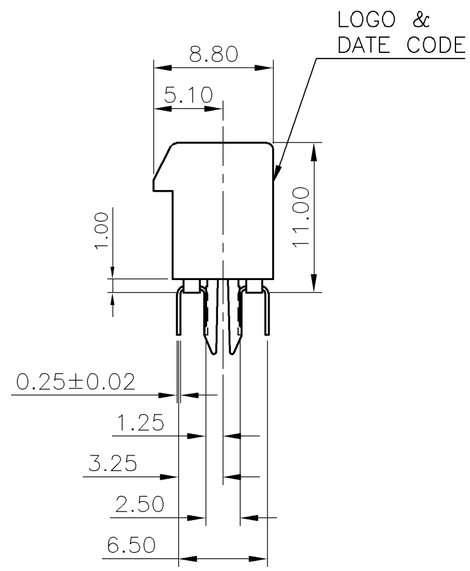

NOTE:

1. MATERIAL:
   HOUSING (SEE TABLE): PA46 OR PA9T, UL94 V-0, COLOR: BLACK.
   CONTACTS: PHOSPHOR BRONZE.
   BOARDLOCK: BRASS.
2. FINISH:
   2.1 CONTACTS: (SEE TABLE) GOLD PLATED ON CONTACT AREA,
   2.54um [100u"] MIN. MATTE-TIN ON SOLDER TAIL,
   WITH ENTIRE CONTACT UNDERPLATED 1.27um [50u"] MIN. NICKEL.
   2.2 BOARDLOCK: 2.54um [100u"] MATTE-TIN PLATING ALL OVER
   NICKEL 1.27um[50u"] MIN. UNDERPLATED OVERALL.
3. WAVE SOLDER CAPABLE TO 265°C MAX. PER TE SPEC. 109-202, CONDITION B.
4. WEIGHT:
   36 POS.: 2.55 GRAMS
   64 POS.: 3.90 GRAMS
   98 POS.: 5.50 GRAMS
   164 POS.: 8.80 GRAMS
5. REFLOW SOLDER CAPABLE TO 260°C PER TE SPEC. TEC-109-201, CONDITION B.

SOLDER CAPACITY	HOUSING MATERIAL	DIM L	GOLD PLATING	DIM E	DIM D	DIM C	DIM B	DIM A	POS.	PART NUMBER	
NOTE 3 & 5	PA9T	2.30	0.381μm[15μ"] MIN.	71.65	70.0	73.15	71.35	89.0	164	5-	-2
NOTE 3	PA46	3.10	0.762μm[30μ"] MIN.	71.65	70.0	73.15	71.35	89.0	164	4-	-6
			0.381μm[15μ"] MIN.							4-	-5
			GOLD FLASH							4-	-4
		2.30	0.762μm[30μ"] MIN.							4-	-3
			0.381μm[15μ"] MIN.							4-	-2
			GOLD FLASH							4-	-1
		3.10	0.762μm[30μ"] MIN.	38.65	37.0	40.15	38.35	56.0	98	3-	-6
			0.381μm[15μ"] MIN.							3-	-5
			GOLD FLASH							3-	-4
		2.30	0.762μm[30μ"] MIN.							3-	-3
			0.381μm[15μ"] MIN.							3-	-2
			GOLD FLASH							3-	-1
		3.10	0.762μm[30μ"] MIN.	21.65	20.0	23.15	21.35	39.0	64	2-	-6
			0.381μm[15μ"] MIN.							2-	-5
			GOLD FLASH							2-	-4
		2.30	0.762μm[30μ"] MIN.							2-	-3
			0.381μm[15μ"] MIN.							2-	-2
			GOLD FLASH							2-	-1
		3.10	0.762μm[30μ"] MIN.	7.65	6.0	9.15	7.35	25.0	36	1-	-6
			0.381μm[15μ"] MIN.							1-	-5
			GOLD FLASH							1-	-4
		2.30	0.762μm[30μ"] MIN.							1-	-3
			0.381μm[15μ"] MIN.							1-	-2
			GOLD FLASH							1-1775801-1	

THIS DRAWING IS A CONTROLLED DOCUMENT.

DIMENSIONS: mm

TOLERANCES UNLESS OTHERWISE SPECIFIED:

0 PLC	± –
1 PLC	± 0.3
2 PLC	± 0.2
3 PLC	± 0.15
4 PLC	± –
ANGLES	± 3°

MATERIAL: SEE NOTE

FINISH: SEE NOTE

DWN	B. HSING	21MAY2009
CHK	S. CHIEN	21MAY2009
APVD	W. KODAMA	21MAY2009

PRODUCT SPEC: 108-57375

APPLICATION SPEC: —

WEIGHT: SEE NOTE

TE Connectivity

NAME: PCI EXPRESS CARD EDGE CONNECTOR VERTICAL, DIP TYPE (BOARD-LOCK FUNCTION)

SIZE	CAGE CODE	DRAWING NO	RESTRICTED TO
A3	00779	C-1775801	—

CUSTOMER DRAWING | SCALE — | SHEET 1 OF 3 | REV C2

THIS DRAWING IS UNPUBLISHED. RELEASED FOR PUBLICATION -,- .
© COPYRIGHT 2010 BY TYCO ELECTRONICS CORPORATION. ALL RIGHTS RESERVED.

LOC	DIST
DW	—

REVISIONS

P	LTR	DESCRIPTION	DATE	DWN	APVD
		SEE SHEET 1.			

1. NO TIE BAR PERMITTED FROM CARD EDGE TO LEADING EDGE OF PAD FOR PINS A1 AND "K"
2. CHAMFER EDGE MUST BE FREE OF CUTTING BURRS

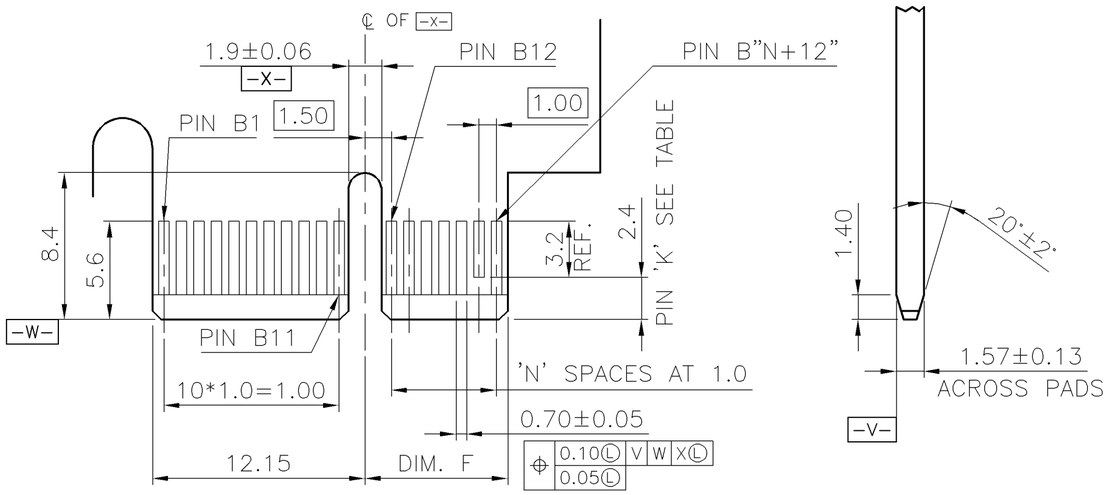

← I/O PANEL DIRECTION

PRIMARY (COMPONENT) SIDE

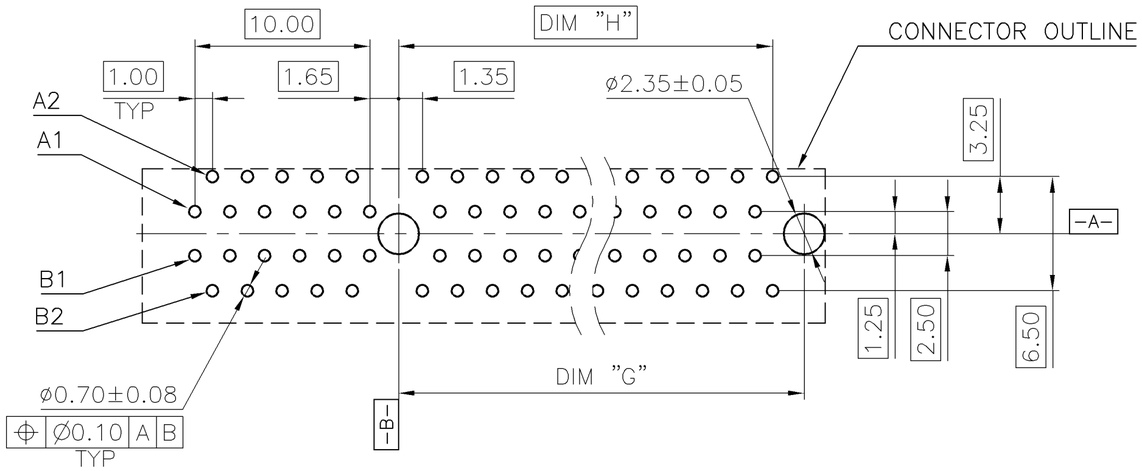

RECOMMENDED PCB LAYOUT

TOLERANCE: ±0.05
DIM.L=3.1mm THICKNESS: 2.4mm
DIM.L=2.3mm THICKNESS: 1.6mm

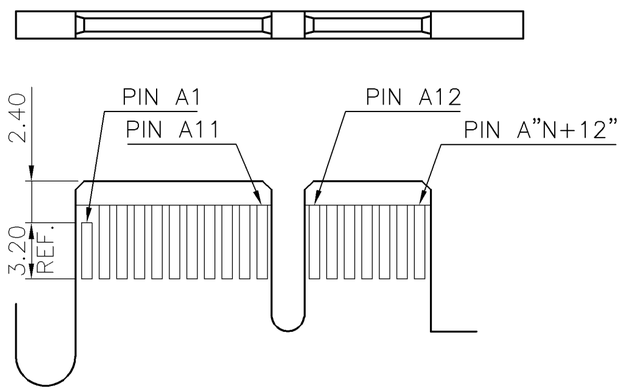

SECONDARY (SOLDER) SIDE

POS.	N	DIM. F	DIM. G	DIM. H	"K"
36	6	8.15	9.15	7.35	B17
64	20	22.15	23.15	21.35	B17,B31
98	37	39.15	40.15	38.35	B17,B31,B48
164	70	72.15	73.15	71.35	B17,B31,B48,B81

THIS DRAWING IS A CONTROLLED DOCUMENT.

DIMENSIONS: mm

TOLERANCES UNLESS OTHERWISE SPECIFIED:

0 PLC	± –
1 PLC	± 0.3
2 PLC	± 0.2
3 PLC	± 0.15
4 PLC	± –
ANGLES	± 3°

MATERIAL –

FINISH –

DWN –
CHK –
APVD –
PRODUCT SPEC –
APPLICATION SPEC –
WEIGHT –

CUSTOMER DRAWING

TE Connectivity

NAME
PCI EXPRESS CARD EDGE CONNECTOR
VERTICAL, DIP TYPE (BOARD-LOCK FUNCTION)

SIZE	CAGE CODE	DRAWING NO	RESTRICTED TO
A3	00779	C-1775801	—

SCALE — SHEET 2 OF 3 REV C2

1470-19 (1/08)

THIS DRAWING IS UNPUBLISHED. RELEASED FOR PUBLICATION -,- .
© COPYRIGHT 2010 BY TYCO ELECTRONICS CORPORATION. ALL RIGHTS RESERVED.

LOC	DIST
DW	—

REVISIONS

P	LTR	DESCRIPTION	DATE	DWN	APVD
		SEE SHEET 1.			

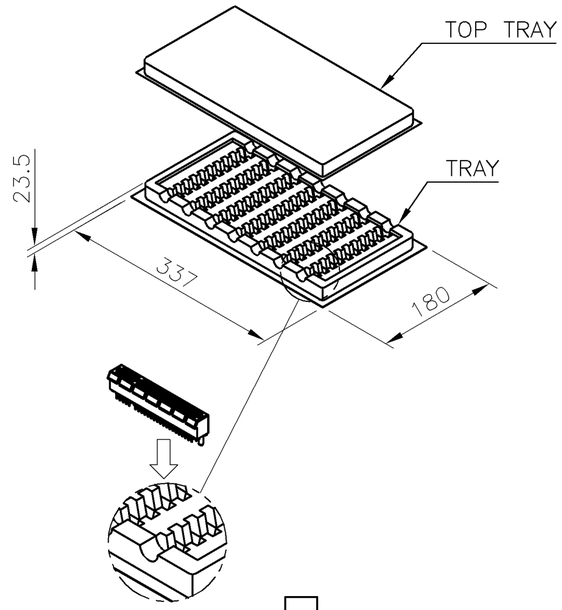

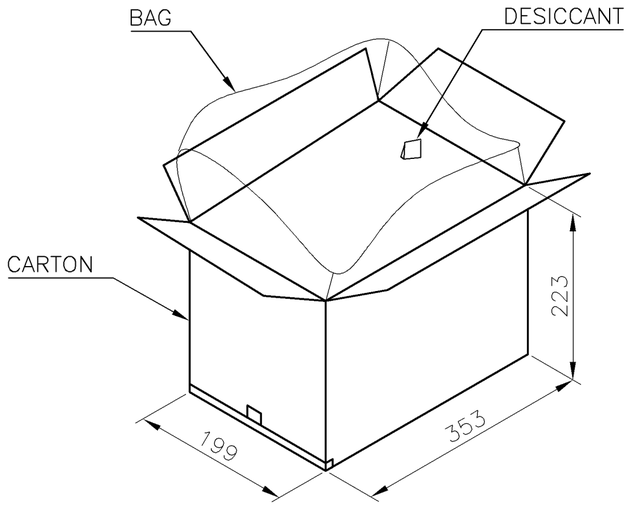

NOTES :
1. MATERIAL :
   TRAY : PVC, COLOR: TRANSPARENT.
   CARTON: CORRUGATED FIBER
   BOX: CORRUGATED FIBER
2. DIMENSION :
   TRAY: SEE DRAWING
   CARTON: SEE DRAWING
   BOX : SEE DRAWING
3. QUANTITY : SEE TABLE
4. WEIGHT : SEE TABLE

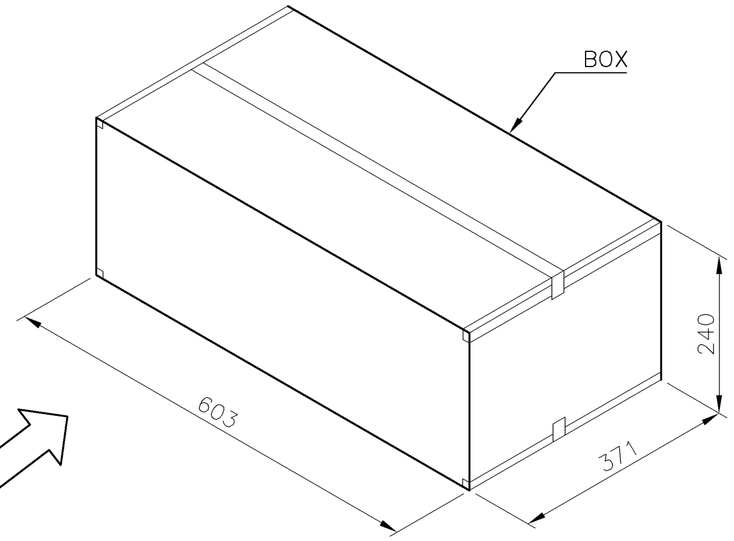

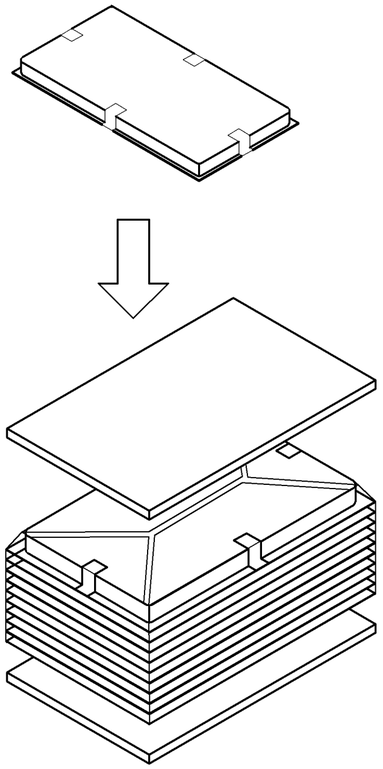

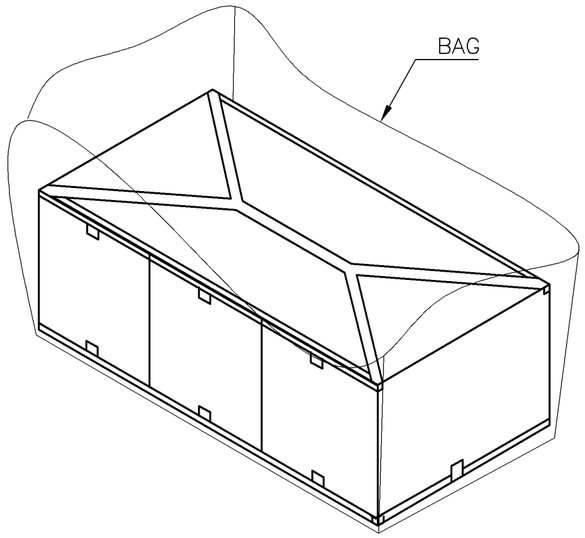

GROSS WEIGHT	NET WEIGHT	PCS/ TRAY	TRAY/ CARTON	CARTON/ BOX	PCS/ BOX	POS
9.6 KG	7.6 KG	30	10	3	900	164
8.5 KG	6.5 KG	40	10	3	1200	98
9.1 KG	7.1 KG	60	10	3	1800	64
7.7 KG	5.7 KG	70	10	3	2100	36

THIS DRAWING IS A CONTROLLED DOCUMENT.

DIMENSIONS: mm

TOLERANCES UNLESS OTHERWISE SPECIFIED:

0 PLC	± –
1 PLC	± 0.3
2 PLC	± 0.2
3 PLC	± 0.15
4 PLC	± –
ANGLES	± 3°

MATERIAL –

FINISH –

DWN –
CHK –
APVD –
PRODUCT SPEC –
APPLICATION SPEC –
WEIGHT –

TE Connectivity

NAME
PCI EXPRESS CARD EDGE CONNECTOR
VERTICAL, DIP TYPE (BOARD–LOCK FUNCTION)

SIZE	CAGE CODE	DRAWING NO	RESTRICTED TO
A3	00779	C-1775801	—

CUSTOMER DRAWING | SCALE — | SHEET 3 OF 3 | REV C2