muRata
INNOVATOR IN ELECTRONICS

# EMI Suppression Filters (Lead Type EMIFIL®)

⚠Note • Please read rating and ⚠CAUTION (for storage, operating, rating, soldering, mounting and handling) in this catalog to prevent smoking and/or burning, etc.
• This catalog has only typical specifications. Therefore, please approve our product specifications or transact the approval sheet for product specifications before ordering.

**EU RoHS Compliant**

・All the products in this catalog comply with EU RoHS.
・EU RoHS is "the European Directive 2011/65/EU on the Restriction of the Use of Certain Hazardous Substances in Electrical and Electronic Equipment."
・For more details, please refer to our website 'Murata's Approach for EU RoHS' (http://www.murata.com/info/rohs.html).

⚠Note • Please read rating and ⚠CAUTION (for storage, operating, rating, soldering, mounting and handling) in this catalog to prevent smoking and/or burning, etc.
• This catalog has only typical specifications. Therefore, please approve our product specifications or transact the approval sheet for product specifications before ordering.

# Contents

Product specifications are as of May 2014.

EMIFIL®, EMIGUARD®,
"EMIFIL" and "EMIGUARD" in this catalog are
the trademarks of Murata Manufacturing Co., Ltd.

Product Guide / Effective Frequency Range ····· p2
Outline of EMI Suppression Filters (EMIFIL®) for DC Line ····· p3

Ferrite Beads Inductors
Part Numbering ····· p7
BL01/02/03 Series ····· p8

Disc Type EMIFIL®
Part Numbering ····· p11
DSS1 Series ····· p12
DSN6/DSS6 Series ····· p14
Broad Band Type DSN9/DST9 Series ····· p17
Heavy-duty Type DSN9H/DST9H Series ····· p19

EMIGUARD® (EMIFIL® with Varistor Function)
Part Numbering ····· p21
VFC2H/VFR3V/VFS6V/VFS9V Series ····· p22
Noise Suppression Effect of VFR/VFS Series ····· p26

Common Mode Choke Coils
Part Numbering ····· p30
PLT09H Series ····· p31

⚠Caution / Notice ····· p32
Soldering and Mounting ····· p33
Packaging ····· p35

Please check the MURATA home page (http://www.murata.com/)
if you cannot find the part number in the catalog.

⚠Note • Please read rating and ⚠CAUTION (for storage, operating, rating, soldering, mounting and handling) in this catalog to prevent smoking and/or burning, etc.
• This catalog has only typical specifications. Therefore, please approve our product specifications or transact the approval sheet for product specifications before ordering.

# Product Guide/Effective Frequency Range

| Type | Series | Effective Frequency Range<br>10kHz 100kHz 1MHz 10MHz 100MHz 1GHz 10GHz |
|---|---|---|
| Disc Type EMIFIL®<br>Ferrite Bead Inductor<br> 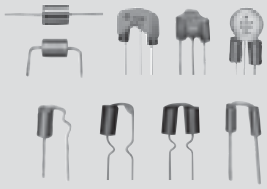 | BL01/02/03<br>DSN6/9(H)<br>DSS1<br>DSS6<br>DST9(H) | |
| EMIGUARD®<br>(EMI Filters with varistor functions)<br> | VFC2H | |
| | VFR3V<br>VFS6V/9V | |
| Common Mode Choke Coils<br> | PLT09H | |

# Outline of EMI Suppression Filters (EMIFIL®) for DC Line

## ●Ferrite Bead Inductor

Ferrite Bead Inductor ·····p.8–10

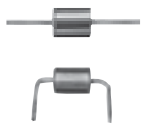

BL01

BL02RN1

BL02RN2

BL03RN2

## ■ Outline

- Chip Ferrite Beads are effective for frequencies ranging from a few MHz to a few GHz. Chip Ferrite Beads are widely used as a low noise countermeasure, as well as a universal noise suppression component.
- Chip Ferrite Beads produce a micro inductance in a low frequency range. At high frequencies, however, the resistive component of the inductor produces the primary impedance. When inserted in series in the noise producing circuit, the resistive impedance of the inductor prevents noise propagation.

Equivalent Circuit

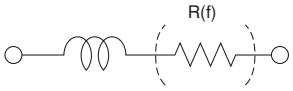


Impedance - Frequency Characteristics (typical)

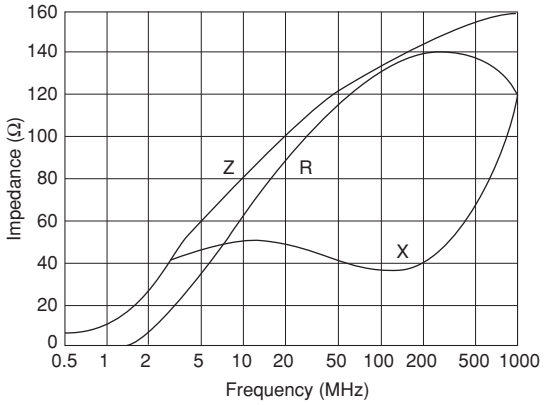


R: Real Part (Resistive Portion) X: Imaginary Part (Inductive Portion)

# Outline of EMI Suppression Filters (EMIFIL®) for DC Line

## ●Disc Type EMIFIL®

Disc Type EMIFIL® ·····p.12–20

DSS1

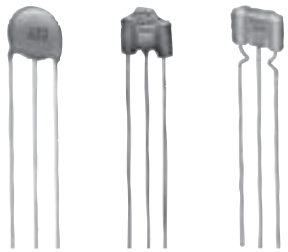

DS□6

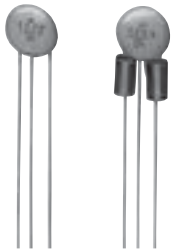

DS□9

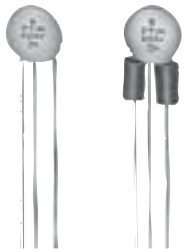

DS□9H

## ■ Outline

- This capacitor type EMI suppression filter has a large noise suppression effect at frequencies ranging from a few MHz to hundreds of MHz. This type of filter is used widely as a universal, high performance EMI suppression component.
- Three-terminal construction reduces residual inductance, thereby substantially improving noise suppression at frequencies over 10MHz.

Comparison of Insertion Loss Characteristics

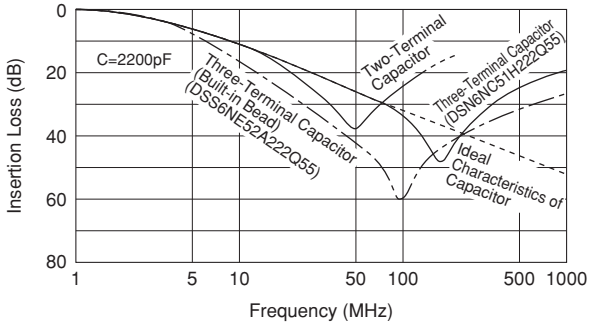


A three-terminal capacitor has a higher self resonance frequency than a general two-terminal type and exhibits effective noise suppression at high frequency.

# Outline of EMI Suppression Filters (EMIFIL®) for DC Line

## ●EMIGUARD®

EMIGUARD® ·····p.22–29

VFC2H VFR3V VFS6V VFS9V

## ■ Outline

- EMIGUARD® eliminates both surge noise and EMI noise applying some unique design like the use of dielectric varistor material to a 3 terminal capacitor.
- Effective when high frequency noise and high voltage surge suppression are required, and also in situations when surging starts at extremely high speeds. This type of surging cannot be eliminated with general type varistors.

Construction of EMIGUARD® (VFS9V)

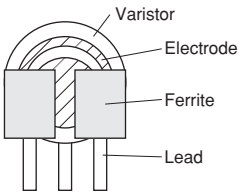


## ■ Surge Absorption Effect of EMIGUARD®

| Type of Filter | Surge Absorption Effect of EMIGUARD® |
|---|---|
| No filter | 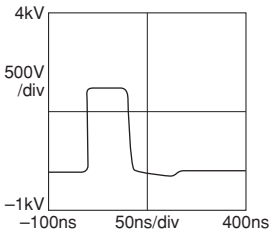  |
| Three-terminal capacitor is used to suppress the surge. | 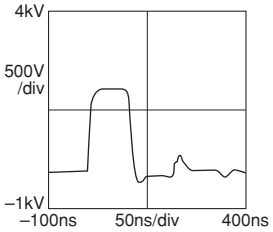  |
| EMIGUARD® is used to suppress the surge. (VFS6V) | 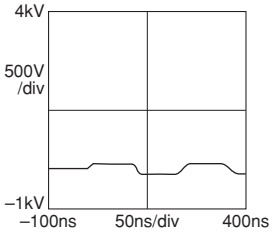  |

# Outline of EMI Suppression Filters (EMIFIL®) for DC Line

## ●Common Mode Choke Coil

Common Mode Choke Coil ·····p.31

**PLT09H**

## ■ Outline

● These choke coils reduce common mode noise, which causes problems on balanced transmission lines, and are effective against common mode noise in the several MHz to several 100MHz frequency range.
They are ideally suited for noise suppression on DC power supply lines and interface cables.

Construction of Common Mode Choke Coil

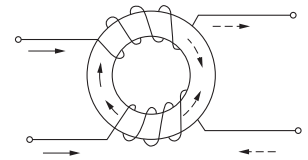

→ Current of Common Mode (Noise)
- - ► Current of Differential Mode (Signal)

Equivalent Circuit

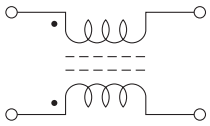

# EMI Suppression Filters (Lead Type EMIFIL®)

## Ferrite Beads Inductors Part Numbering

### Ferrite Beads Inductors

(Part Number) BL 02 RN 2 R1 M 2 B
❶ ❷ ❸ ❹ ❺ ❻ ❼ ❽

❶Product ID

| Product ID | |
|---|---|
| BL | Ferrite Beads Inductors |

❷Series

| Code | Series |
|---|---|
| 01 | Beads ø3.6 |
| 02 | Beads ø3.4 |
| 03 | Beads ø2.3 max. |

❸Beads Core Material

| Code | Beads Core Material |
|---|---|
| RN | Standard Type |

❹Numbers of Beads Core

| Code | Numbers of Beads Core |
|---|---|
| 1 | 1 |
| 2 | 2 |

❺Lead Type

| Code | Lead Type | Series |
|---|---|---|
| A1 | Axial Straight Type | BL01 |
| A2 | Axial Crimp Type | BL01 |
| R1 | Radial Straight Type | BL02/BL03 |
| R2 | Radial Straight and Wave Formed Leads Type | BL02 |
| R3 | Radial Incrimp Type | BL02 |

❻Lead Length, Space

| Code | Lead Length, Space | Series |
|---|---|---|
| A | Bulk, Axial Type, 3.7mm | BL01 |
| D | Bulk, Axial Type, 45.0mm | |
| E | Taping, Axial Type, 26.0mm | |
| F | Taping, Axial Type, 52.0mm | |
| J | Bulk, Radial Type, 5.0mm | BL02/BL03 |
| M | Bulk, Radial Type, 10.0mm | |
| N | Taping, Radial Type, 16.5mm | |
| P | Taping, Radial Type, 18.5mm | |
| Q | Taping, Radial Type, 20.0mm | |

❼Lead Diameter

| Code | Lead Diameter |
|---|---|
| 1 | ø0.60mm |
| 2 | ø0.65mm |

❽Packaging

| Code | Packaging | Series |
|---|---|---|
| A | Ammo Pack | BL01/BL02/BL03 |
| B | Bulk | All Series |
| J | Paper Reel (ø320mm) | BL01 |

# EMI Suppression Filters (Lead Type EMIFIL®)

## Ferrite Beads Inductors BL01/02/03 Series

### ■ Features

BL01/02/03 series are ferrite beads with lead wires to produce a high frequency loss for suppression of noise. Simple construction and easy-to-use, effective for low impedance circuits such as power supplies and grounds. Effective also for preventing overshoot and undershoot of digital signal in clocks or the like, and suppressing the higher harmonic wave. Suitable for prevention of abnormal oscillation at high frequency amplifying circuit.

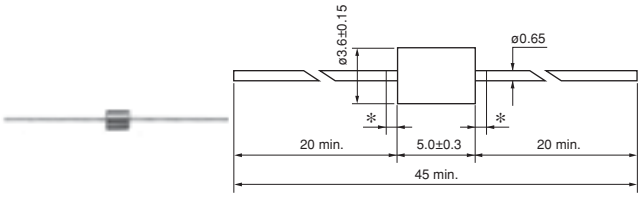


*Coating extending on leads : 1.5 max.

BL01RN1A1D2B

(in mm)

BL01RN1A2A2B

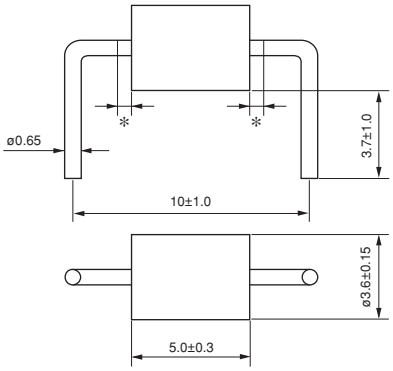


*Coating extending on leads : 1.5 max. (in mm)

BL02RN1R2M2B

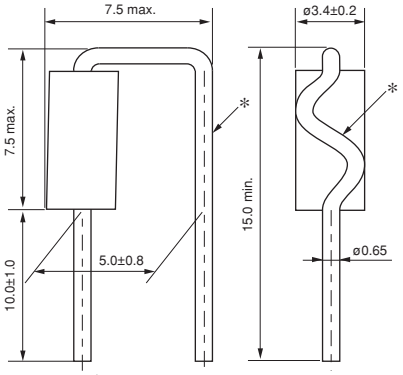


*There is excess bond stick on the wire. (in mm)

BL02RN1R3J2B

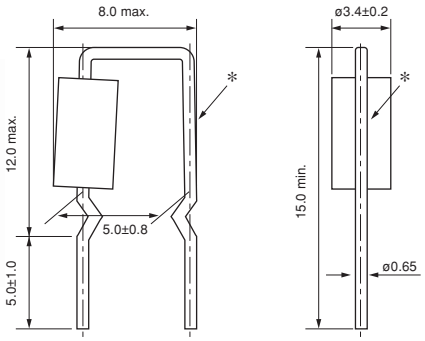


*There is excess bond stick on the wire. (in mm)

BL02RN2R1M2B

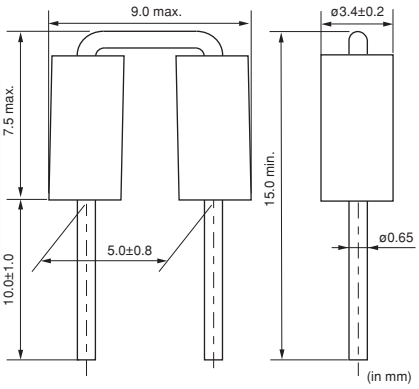


(in mm)

BL02RN2R3J2B

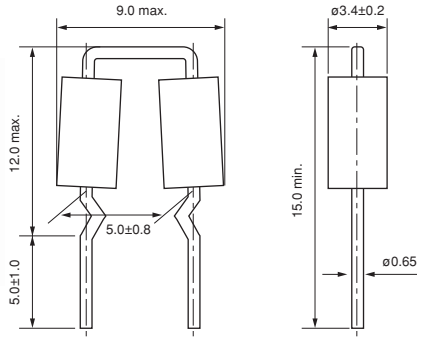


(in mm)

BL03RN2R1M1B

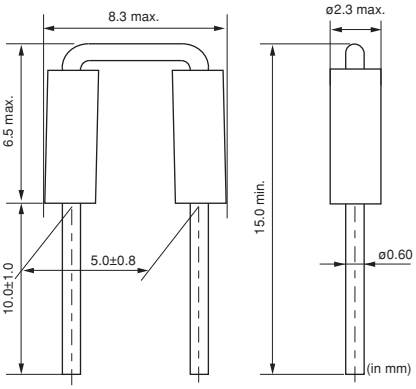


(in mm)

# BL01/BL02/BL03 Series

| Part Number | Rated Current (A) | Operating Temperature Range |
|---|---|---|
| **BL01RN1A1D2B** | 7 | -40 to +85°C |
| **BL01RN1A1E1A** | 6 | -40 to +85°C |
| **BL01RN1A1F1J** | 6 | -40 to +85°C |
| **BL01RN1A2A2B** | 7 | -40 to +85°C |
| **BL02RN1R2M2B** | 7 | -40 to +85°C |
| **BL02RN1R2N1A** | 6 | -40 to +85°C |
| **BL02RN1R2P1A** | 6 | -40 to +85°C |
| **BL02RN1R2Q1A** | 6 | -40 to +85°C |
| **BL02RN1R3J2B** | 7 | -40 to +85°C |
| **BL02RN1R3N1A** | 6 | -40 to +85°C |
| **BL02RN2R1M2B** | 7 | -40 to +85°C |
| **BL02RN2R1N1A** | 6 | -40 to +85°C |
| **BL02RN2R1P1A** | 6 | -40 to +85°C |
| **BL02RN2R1Q1A** | 6 | -40 to +85°C |
| **BL02RN2R3J2B** | 7 | -40 to +85°C |
| **BL02RN2R3N1A** | 6 | -40 to +85°C |
| **BL03RN2R1M1B** | 6 | -40 to +85°C |
| **BL03RN2R1N1A** | 6 | -40 to +85°C |
| **BL03RN2R1P1A** | 6 | -40 to +85°C |
| **BL03RN2R1Q1A** | 6 | -40 to +85°C |

Please refer to p.35, "Packaging" for Dimensions of Part Numbers Except for 'B' for the last code.

## ■ Equivalent Circuit

(Resistance element becomes dominant at high frequencies.)

## ■ Impedance - Frequency Characteristics

BL01RN1

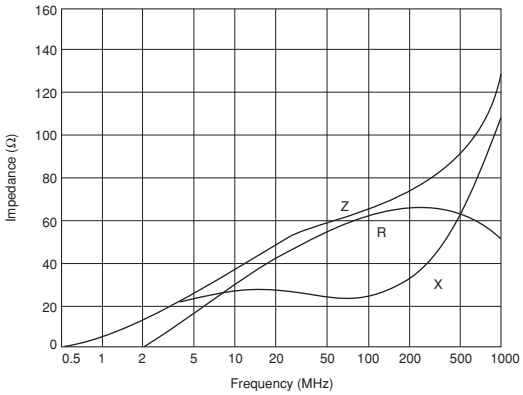


BL02RN1

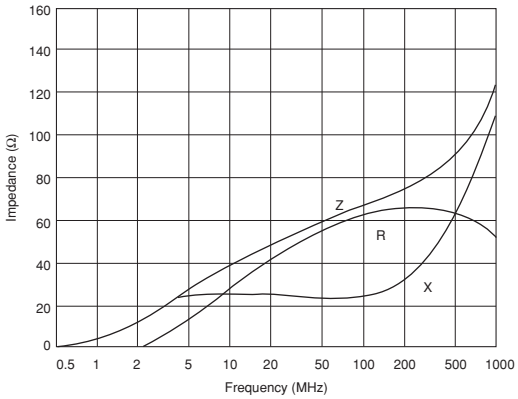


Continued on the following page. ↗

Continued from the preceding page.

## ■ Impedance - Frequency Characteristics

BL02RN2

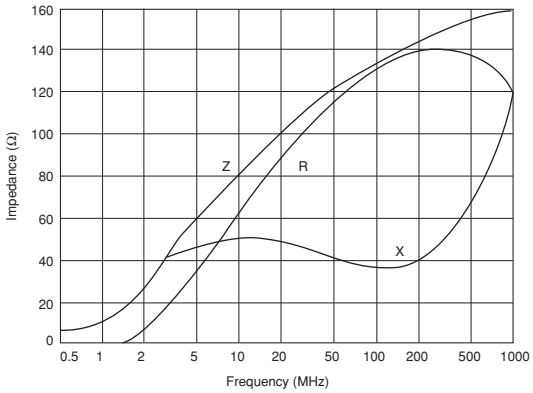


BL03RN2

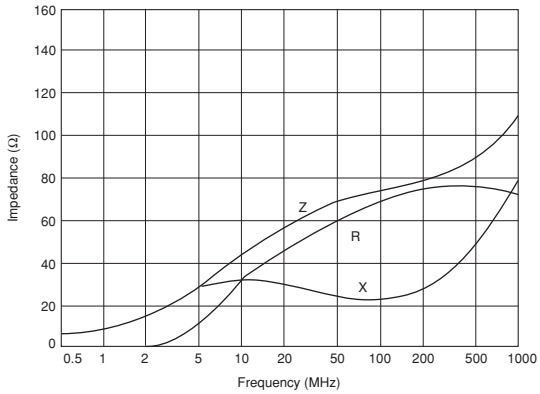

# EMI Suppression Filters (Lead Type EMIFIL®)

## Disc Type EMIFIL® Part Numbering

### Disc Type EMIFIL®

(Part Number) DS N 9 H B3 2E 101 Q92 A
❶ ❷ ❸ ❹ ❺ ❻ ❼ ❽ ❾

❶Product ID

| Product ID | |
|---|---|
| DS | Three-terminal Capacitor |

❷Structure

| Code | Structure |
|---|---|
| N | No Ferrite Beads Type |
| S | Built-in Ferrite Beads Type |
| T | with Ferrite Beads Type |

❸Style

| Code | Style |
|---|---|
| 1 | Expressed by a letter. |
| 6 | |
| 9 | |

❹Category

| Code | Category |
|---|---|
| N | for General Use |
| H | for Heavy-duty |

❺Temperature Characteristics

| Code | Capacitance Change |
|---|---|
| B3 | ±10% (Temperature Range: -25˚C to +85˚C) |
| C5 | ±22% (Temperature Range: -25˚C to +85˚C) |
| D3 | +20/-30% (Temperature Range: -25˚C to +85˚C) |
| E5 | +22/-56% (Temperature Range: -25˚C to +85˚C) |
| Z8 | +30/-85% (Temperature Range: -10˚C to +60˚C) |

❻Rated Voltage

| Code | Rated Voltage |
|---|---|
| 1H | 50V |
| 2A | 100V |
| 2E | 250V |

❼Capacitance

Expressed by three alphanumerics. The unit is in pico-farad (pF). The first and second figures are significant digits, and the third figure expresses the number of zeros that follow the two figures.

❽Lead Type/❾Packaging

| Code | Lead Type | Lead Length* (mm) | Packaging | Series |
|---|---|---|---|---|
| Q55B | Straight | 25.0 min. | Bulk | All series |
| Q50B | | 4.0±0.5 | | DST9N/H |
| Q52B | | 6.0±1.0 | | DST9N |
| Q54B | | 4.0±0.5 | | DSN6N/9N, DSS6N |
| Q56B | | 6.0±1.0 | | |
| T41B | Incrimp | 4.0±0.5 | | DSS6N |
| T51B | | 25.0 min. | | |
| Q91A | Straight | 20.0±1.0 | Paper Reel (ø320mm) | DSS1N |
| | | | Ammo Pack | DS□6N, DSN9N/H, DSS1N |
| Q92A | | 16.5±1.0 | | DS□6N, DS□9N/H |
| Q93A | | 18.5±1.0 | | |
| U21A | Incrimp | 16.5±1.0 | | DSS6N |
| U31A | | 18.5±1.0 | | |

*Lead Distance between Reference and Bottom Planes Except for Bulk.

# EMI Suppression Filters (Lead Type EMIFIL®)

## Disc Type EMIFIL® DSS1 Series

### ■ Features

DSS1 series is a compact, high performance lead type 3 terminal capacitor which can be mounted in 2.54mm pitch.
Its three terminal structure enables nice high frequency performance.
Wide capacitance variation enables flexible selection for various noise frequencies.
High speed mounting is available with automatic insertion machine.

DSS1_Q55B Series

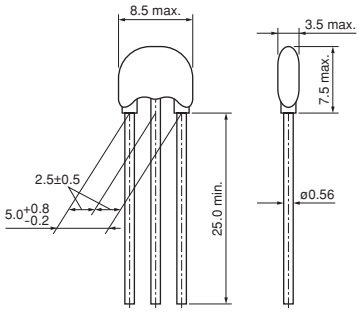


(in mm)

### Built-in Ferrite Beads DSS1 Series

| Part Number | Capacitance (pF) | Rated Voltage (Vdc) | Rated Current (A) | Operating Temperature Range |
|---|---|---|---|---|
| **DSS1NB32A220** | 22 ±10% | 100 | 6 | -40 to +85°C |
| **DSS1NB32A330** | 33 ±10% | 100 | 6 | -40 to +85°C |
| **DSS1NB32A470** | 47 ±10% | 100 | 6 | -40 to +85°C |
| **DSS1NB32A680** | 68 ±10% | 100 | 6 | -40 to +85°C |
| **DSS1NB32A101** | 100 ±10% | 100 | 6 | -40 to +85°C |
| **DSS1NB32A121** | 120 ±10% | 100 | 6 | -40 to +85°C |
| **DSS1NB32A151** | 150 ±10% | 100 | 6 | -40 to +85°C |
| **DSS1NB32A221** | 220 ±10% | 100 | 6 | -40 to +85°C |
| **DSS1NB32A271** | 270 ±10% | 100 | 6 | -40 to +85°C |
| **DSS1NB32A331** | 330 ±10% | 100 | 6 | -40 to +85°C |
| **DSS1NB32A471** | 470 ±10% | 100 | 6 | -40 to +85°C |
| **DSS1NB32A681** | 680 ±10% | 100 | 6 | -40 to +85°C |
| **DSS1NB32A102** | 1000 ±10% | 100 | 6 | -40 to +85°C |
| **DSS1NB32A152** | 1500 ±10% | 100 | 6 | -40 to +85°C |
| **DSS1NB32A222** | 2200 ±10% | 100 | 6 | -40 to +85°C |
| **DSS1NB32A332** | 3300 ±10% | 100 | 6 | -40 to +85°C |
| **DSS1NB32A472** | 4700 ±10% | 100 | 6 | -40 to +85°C |
| **DSS1NB32A682** | 6800 ±10% | 100 | 6 | -40 to +85°C |
| **DSS1NB32A103** | 10000 ±10% | 100 | 6 | -40 to +85°C |
| **DSS1NB32A153** | 15000 ±10% | 100 | 6 | -40 to +85°C |
| **DSS1NB32A223** | 22000 ±10% | 100 | 6 | -40 to +85°C |
| **DSS1NB31H333** | 33000 ±10% | 50 | 6 | -40 to +85°C |
| **DSS1NB31H473** | 47000 ±10% | 50 | 6 | -40 to +85°C |
| **DSS1NB31H104** | 100000 ±10% | 50 | 6 | -40 to +85°C |

Please refer to Part Numbering for Type and Length of Lead.

## ■ Equivalent Circuit

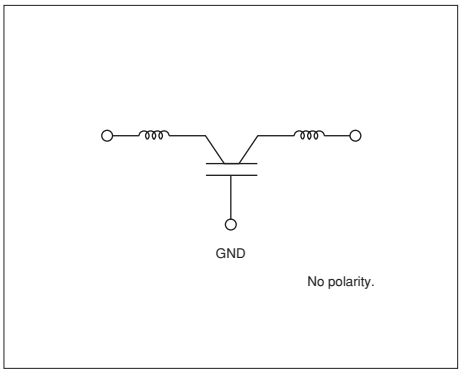


## ■ Insertion Loss Characteristics

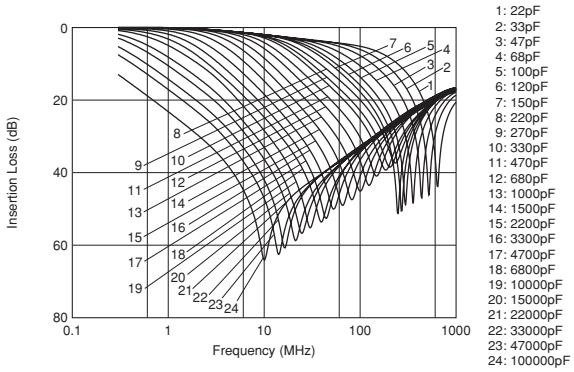

# EMI Suppression Filters (Lead Type EMIFIL®)

## Disc Type EMIFIL® DSN6/DSS6 Series

### ■ Features

DS_6 is a compact, high performance lead type EMI suppression filter which can be mounted 2.54mm pitch. Its three terminal structure enables precise high frequency performance.

DSN6_Q55B Series

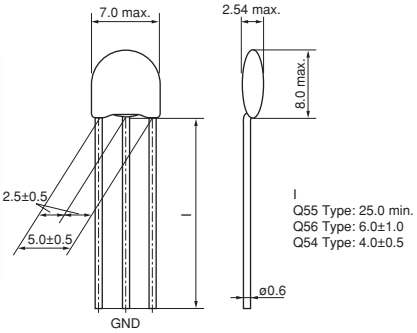


(in mm)

DSS6_Q55B Series
Straight Type

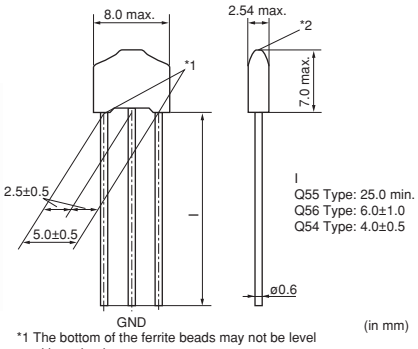


(in mm)

*1 The bottom of the ferrite beads may not be level with each other.
*2 There may be a hole on the top of ferrite beads, which causes no characteristics deterioration.

DSS6_T51B Series
Incrimp Type

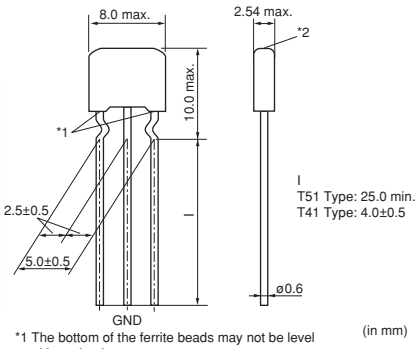


(in mm)

*1 The bottom of the ferrite beads may not be level with each other.
*2 There may be a hole on the top of ferrite beads, which causes no characteristics deterioration.

## DSN6 Series

| Part Number | Capacitance (pF) | Rated Voltage (Vdc) | Rated Current (A) | Operating Temperature Range |
|---|---|---|---|---|
| **DSN6NC51H220** | 22 ±20% | 50 | 6 | -25 to +85°C |
| **DSN6NC51H330** | 33 ±20% | 50 | 6 | -25 to +85°C |
| **DSN6NC51H470** | 47 ±20% | 50 | 6 | -25 to +85°C |
| **DSN6NC51H101** | 100 ±20% | 50 | 6 | -25 to +85°C |
| **DSN6NC51H271** | 270 ±20% | 50 | 6 | -25 to +85°C |
| **DSN6NC51H102** | 1000 ±20% | 50 | 6 | -25 to +85°C |
| **DSN6NC51H222** | 2200 ±20% | 50 | 6 | -25 to +85°C |
| **DSN6NZ81H103** | 10000 80/-20% | 50 | 6 | -25 to +85°C |

Please refer to Part Numbering for Type and Length of Lead.

## ■ Equivalent Circuit

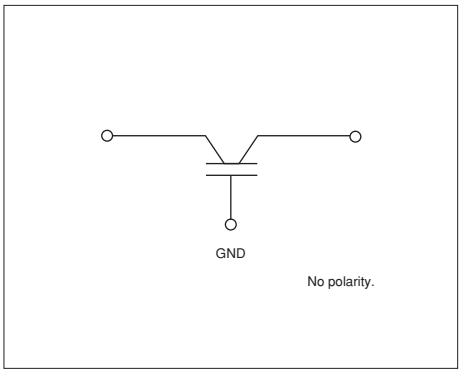


## ■ Insertion Loss Characteristics

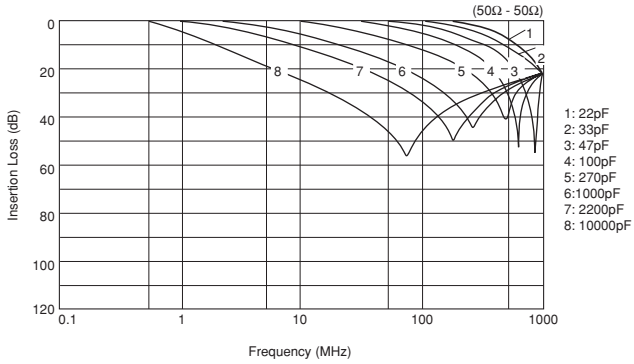


# Built-in Ferrite Beads DSS6 Series Straight Type

| Part Number | Capacitance (pF) | Rated Voltage (Vdc) | Rated Current (A) | Operating Temperature Range |
|---|---|---|---|---|
| **DSS6NC52A220** | 22 ±20% | 100 | 6 | -25 to +85°C |
| **DSS6NC52A330** | 33 ±20% | 100 | 6 | -25 to +85°C |
| **DSS6NC52A470** | 47 ±20% | 100 | 6 | -25 to +85°C |
| **DSS6NC52A101** | 100 ±20% | 100 | 6 | -25 to +85°C |
| **DSS6NC52A151** | 150 ±20% | 100 | 6 | -25 to +85°C |
| **DSS6NC52A221** | 220 ±20% | 100 | 6 | -25 to +85°C |
| **DSS6NC52A271** | 270 ±20% | 100 | 6 | -25 to +85°C |
| **DSS6NC52A471** | 470 ±20% | 100 | 6 | -25 to +85°C |
| **DSS6NC52A102** | 1000 ±20% | 100 | 6 | -25 to +85°C |
| **DSS6NE52A222** | 2200 80/-20% | 100 | 6 | -25 to +85°C |
| **DSS6NZ82A103** | 10000 ±30% | 100 | 6 | -25 to +85°C |

Please refer to Part Numbering for Type and Length of Lead.

## ■ Equivalent Circuit

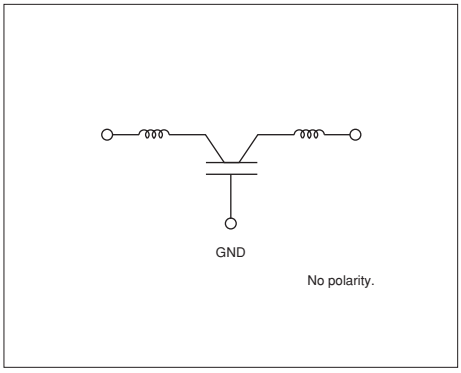


## ■ Insertion Loss Characteristics

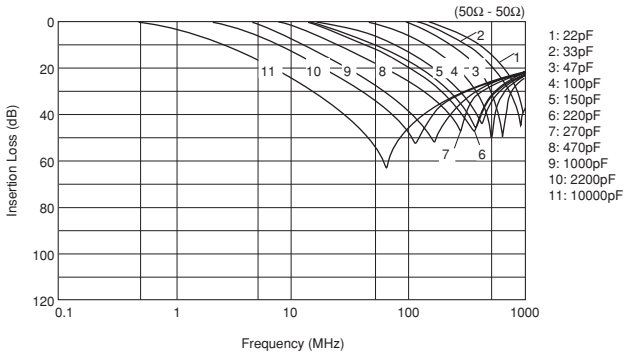

# Built-in Ferrite Beads DSS6 Series Incrimp Type

| Part Number | Capacitance (pF) | Rated Voltage (Vdc) | Rated Current (A) | Operating Temperature Range |
|---|---|---|---|---|
| **DSS6NC52A220** | 22 ±20% | 100 | 6 | -25 to +85°C |
| **DSS6NC52A330** | 33 ±20% | 100 | 6 | -25 to +85°C |
| **DSS6NC52A470** | 47 ±20% | 100 | 6 | -25 to +85°C |
| **DSS6NC52A101** | 100 ±20% | 100 | 6 | -25 to +85°C |
| **DSS6NC52A151** | 150 ±20% | 100 | 6 | -25 to +85°C |
| **DSS6NC52A221** | 220 ±20% | 100 | 6 | -25 to +85°C |
| **DSS6NC52A271** | 270 ±20% | 100 | 6 | -25 to +85°C |
| **DSS6NC52A471** | 470 ±20% | 100 | 6 | -25 to +85°C |
| **DSS6NC52A102** | 1000 ±20% | 100 | 6 | -25 to +85°C |
| **DSS6NE52A222** | 2200 80/-20% | 100 | 6 | -25 to +85°C |
| **DSS6NZ82A103** | 10000 ±30% | 100 | 6 | -25 to +85°C |

Please refer to Part Numbering for Type and Length of Lead.

## ■ Equivalent Circuit

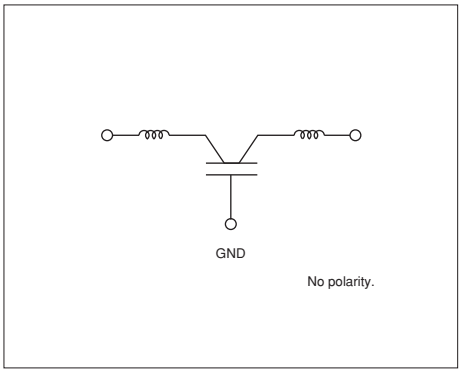


## ■ Insertion Loss Characteristics

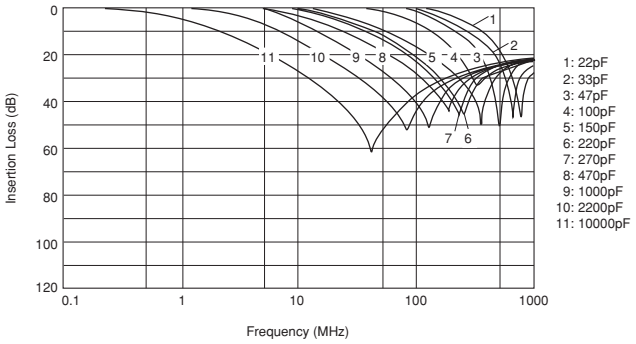

# EMI Suppression Filters (Lead Type EMIFIL®)

## Disc Type EMIFIL® Broad Band Type DSN9/DST9 Series

### ■ Features

DS_9 is a basic type EMI suppression filter which can obtain high insertion loss in a wide frequency range. Its three terminal structure enables precise high frequency performance.

### ■ Supplement

Diameter of lead is 0.6mm for taping type.
Taping type is three terminal in-line arrangement.

DSN9N_Q55B

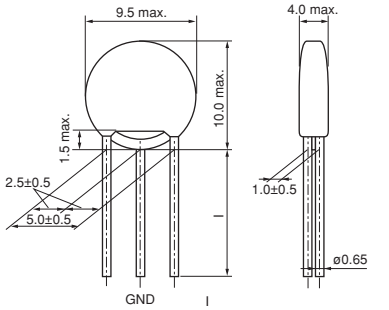


Q55 Type: 25.0 min.
Q56 Type: 6.0±1.0
Q54 Type: 4.0±0.5

(in mm)

DST9N_Q55B

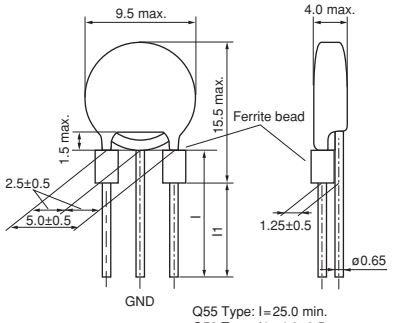


Q55 Type: l=25.0 min.
Q50 Type: l1=4.0±0.5

(in mm)

## DSN9 Series

| Part Number | Capacitance (pF) | Rated Voltage (Vdc) | Rated Current (A) | Operating Temperature Range |
|---|---|---|---|---|
| **DSN9NC52A271** | 270 ±20% | 100 | 7 | -25 to +85°C |
| **DSN9NC52A222** | 2200 ±20% | 100 | 7 | -25 to +85°C |
| **DSN9NC51H223** | 22000 50/-20% | 50 | 7 | -25 to +85°C |

Rated current is 6A for taping type and its lead diameter is phi 0.6mm.
Please refer to Part Numbering for Type and Length of Lead.

### ■ Equivalent Circuit

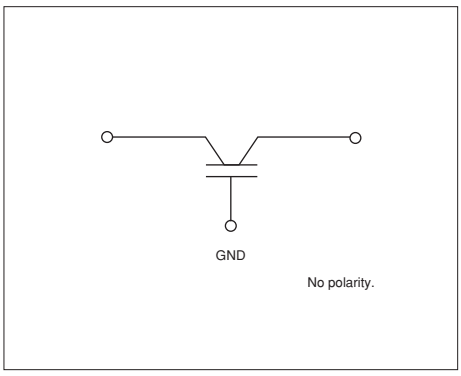


### ■ Insertion Loss Characteristics

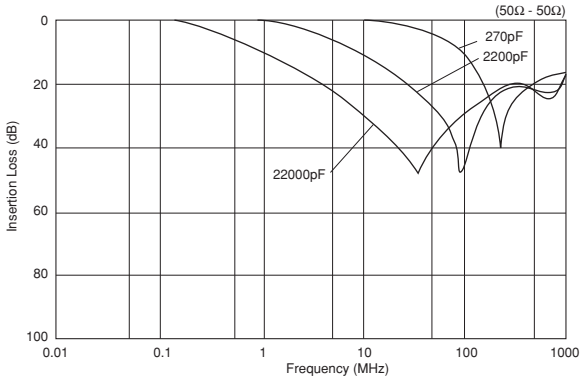

# With Ferrite Beads DST9 Series

| Part Number | Capacitance (pF) | Rated Voltage (Vdc) | Rated Current (A) | Operating Temperature Range |
|---|---|---|---|---|
| **DST9NB32A271** | 270 ±20% | 100 | 7 | -25 to +85°C |
| **DST9NC52A271** | 270 ±20% | 100 | 7 | -25 to +85°C |
| **DST9NB32A222** | 2200 ±20% | 100 | 7 | -25 to +85°C |
| **DST9NC52A222** | 2200 ±20% | 100 | 7 | -25 to +85°C |
| **DST9NC51H223** | 22000 50/-20% | 50 | 7 | -25 to +85°C |
| **DST9ND31H223** | 22000 50/-20% | 50 | 7 | -25 to +85°C |

Rated current is 6A for taping type and its lead diameter is phi 0.6mm.
Please refer to Part Numbering for Type and Length of Lead.

## ■ Equivalent Circuit

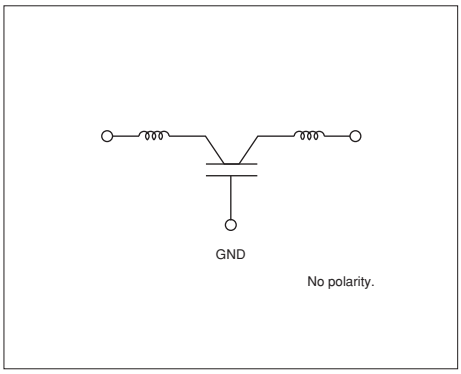


## ■ Insertion Loss Characteristics

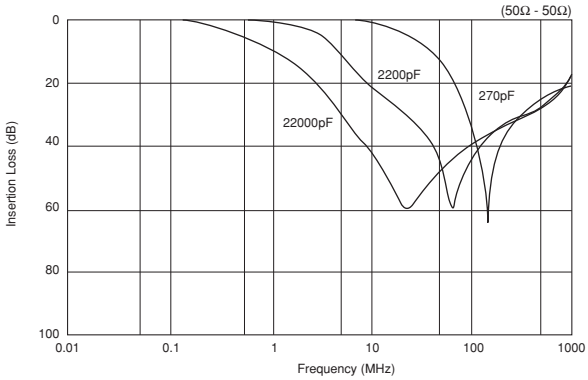

# EMI Suppression Filters (Lead Type EMIFIL®)

## Disc Type EMIFIL® Heavy-duty Type DSN9H/DST9H Series

### ■ Features

DS_9H is a basic type EMI suppression filter which can obtain high insertion loss in a wide frequency range. Its three terminal structure enables nice high frequency performance. High rated voltage of 250Vdc and wide operating temperature range from -40 degrees C to 105 degrees C are suitable for high reliability circuits.

### ■ Supplement

Diameter of lead is 0.6mm for taping type.
Taping type is three terminal in-line arrangement.

DSN9H_Q55B

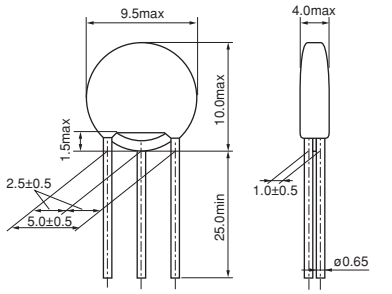


(in mm)

DST9H_Q55B

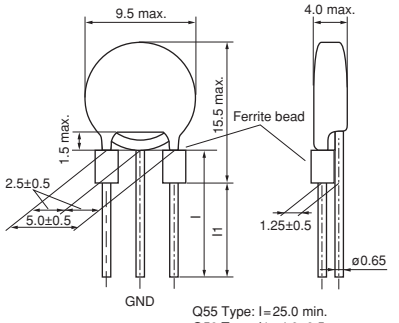


Q55 Type: l=25.0 min.
Q50 Type: l1=4.0±0.5

(in mm)

## DSN9H Series

| Part Number | Capacitance (pF) | Rated Voltage (Vdc) | Rated Current (A) | Operating Temperature Range |
|---|---|---|---|---|
| **DSN9HB32E220** | 22 ±20% | 250 | 6 | -40 to +105°C |
| **DSN9HB32E101** | 100 ±20% | 250 | 6 | -40 to +105°C |
| **DSN9HB32E271** | 270 ±20% | 250 | 6 | -40 to +105°C |
| **DSN9HB32E222** | 2200 ±20% | 250 | 6 | -40 to +105°C |

Please refer to Part Numbering for Type and Length of Lead.

### ■ Equivalent Circuit

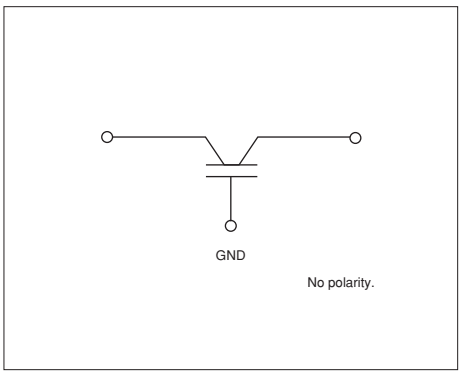


### ■ Insertion Loss Characteristics

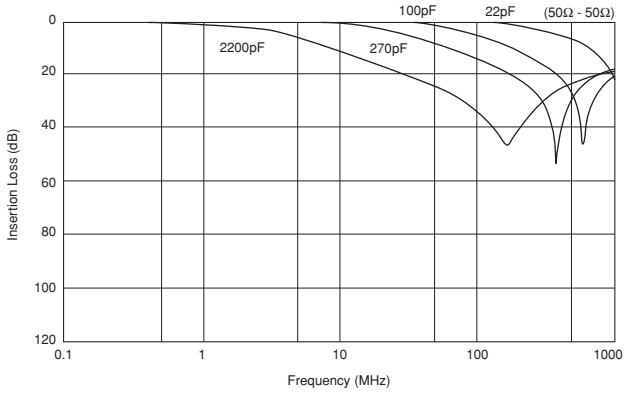

# With Ferrite Beads DST9H Series

| Part Number | Capacitance (pF) | Rated Voltage (Vdc) | Rated Current (A) | Operating Temperature Range |
|---|---|---|---|---|
| **DST9HB32E220** | 22 ±20% | 250 | 6 | -40 to +105°C |
| **DST9HB32E101** | 100 ±20% | 250 | 6 | -40 to +105°C |
| **DST9HB32E271** | 270 ±20% | 250 | 6 | -40 to +105°C |
| **DST9HB32E222** | 2200 ±20% | 250 | 6 | -40 to +105°C |

Please refer to Part Numbering for Type and Length of Lead.

## ■ Equivalent Circuit

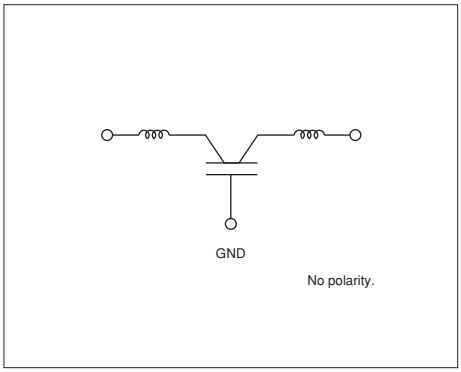


## ■ Insertion Loss Characteristics

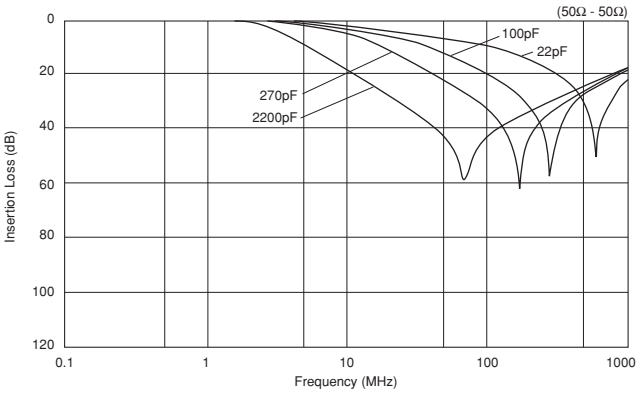

# EMI Suppression Filters (Lead Type EMIFIL®)

## EMIGUARD® (EMIFIL® with Varistor Function) Part Numbering

### EMIGUARD® (EMIFIL® with Varistor Function)

(Part Number)

| VF | S | 6 | V | D8 | 1E | 221 | | T51 | B |
|---|---|---|---|---|---|---|---|---|---|
| ❶ | ❷ | ❸ | ❹ | ❺ | ❻ | ❼ | | ❿ | ⓫ |

| VF | C | 2 | H | R7 | 1D | 105 | K | 2 | T51 | B |
|---|---|---|---|---|---|---|---|---|---|---|
| ❶ | ❷ | ❸ | ❹ | ❺ | ❻ | ❼ | ❽ | ❾ | ❿ | ⓫ |

❶Product ID

| Product ID | |
|---|---|
| VF | EMIGUARD® Lead Type |

❷Structure

| Code | Structure |
|---|---|
| S | Built-in Ferrite Beads Type |
| R | with Resistance |
| C | Built-in Capacitor |

❸Style

| Code | Style |
|---|---|
| 2 | Size is expressed by a digit |
| 3 | |
| 6 | |
| 9 | |

❹Features

| Code | Features |
|---|---|
| V | with Varistor Function |
| H | with Varistor Function (for Automotive) |

❺Temperature Characteristics

| Code | Capacitance Change |
|---|---|
| D8 | +20/-30% (Temperature Range: -40˚C to +105˚C) |
| D3 | +20/-30% (Temperature Range: -25˚C to +85˚C) |
| R7 | ±15% (Temperature Range: -55˚C to +125˚C) |

❻Rated Voltage

| Code | Rated Voltage |
|---|---|
| 1B | 12V |
| 1D | 22V |
| 1E | 25V |

❼Capacitance

Expressed by three alphanumerics. The unit is in pico-farad (pF). The first and second figures are significant digits, and the third figure expresses the number of zeros that follow the two figures.

❽Capacitance

| Code | Capacitance |
|---|---|
| K | ±10% |

❾Varistor Voltage

| Code | Varistor Voltage |
|---|---|
| 2 | 27V |

❿Lead Type/⓫Packaging

| Code | Lead Type | Lead Length* | Packaging | Series |
|---|---|---|---|---|
| T51B | Incrimp | 25.0mm min. | Bulk | VFR3/VFS6 |
| U31A | | 18.5±1.0mm | Ammo Pack | |
| Q55B | Straight | 25.0mm min. | Bulk | VFS9 |
| Q91J | | 20.0±1.0mm | Paper Reel (ø320mm) | |
| Q92J | | 16.5±1.0mm | | |
| Q93J | | 18.5±1.0mm | | |

*Lead Distance between Reference and Bottom Planes Except for Bulk.

| Code | Lead Type | Lead Length* | Packaging | Series |
|---|---|---|---|---|
| K1B | Inside Crimp | 26.0±1.0mm | Bulk | VFC2 |
| M1A | | 18.0±1.0mm | Ammo Pack | |
| M1J | | | Paper Reel (ø320mm) | |

*From bottom of the crimp.

# EMI Suppression Filters (Lead Type EMIFIL®)

## EMIGUARD® (EMIFIL® with Varistor Function) VFC2H/VFR3V/VFS6V/VFS9V Series

### VFC2H Series

VFC2H series is EMI suppression filters of lead type that combines the varistor and capacitor.

VFC2H Series

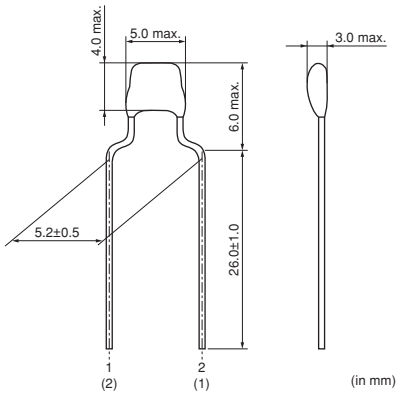


### ■ Features

1. Suitable for absorbing surge voltages occurred from inductive load of motors, relays, etc.
2. High maximum energy
3. Smaller size, High capacitance
4. Taping is capable of fast implementation of automatic insertion.

| Part Number | Varistor Voltage (Vdc) | Capacitance (μF) | Temperature Characteristics | Rated Voltage (Vdc) | Rated Current | Insulation Resistance (min.) (M ohm) | Operating Temperature Range |
|---|---|---|---|---|---|---|---|
| **VFC2HR71D105K2** | 27 +5/-3V | 1.0 ±10% | R7 (±15%) | 22 | - | 1 | -55 to 125°C |

Please refer to Part Numbering for Type and Length of Lead.

### ■ Equivalent Circuit

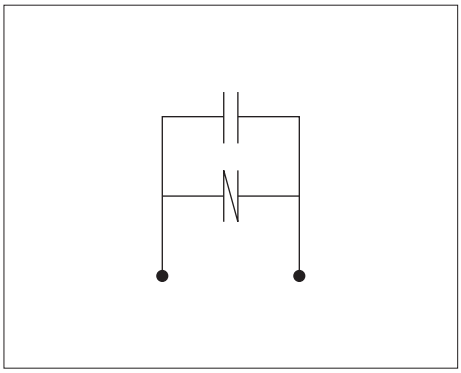

# Semiconductor Protection VFR3V Series

## ■ Features

VFR3V series is designed for ESD surge protection of IC. It efficiently absorbs ESD surges rushed into IC's I/O terminal.

## ■ Applications

Elimination of noise and protection of semiconductors in office equipment, including computers and peripheral equipment, copy machines, and communication terminals.

VFR3V Series

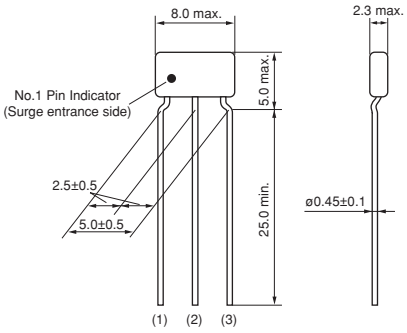


(in mm)

| Part Number | Varistor Voltage (Vdc) | Capacitance (pF) | Rated Voltage (Vdc) | Rated Current (mA) | Peak Pulse Current (A) | Operating Temperature Range |
|---|---|---|---|---|---|---|
| **VFR3VD31E131** | 50 ±20% | 130 ±20% | 25 | 20 | 30 | -25 to 85°C |

Please refer to Part Numbering for Type and Length of Lead.

## ■ Insertion Loss Characteristics

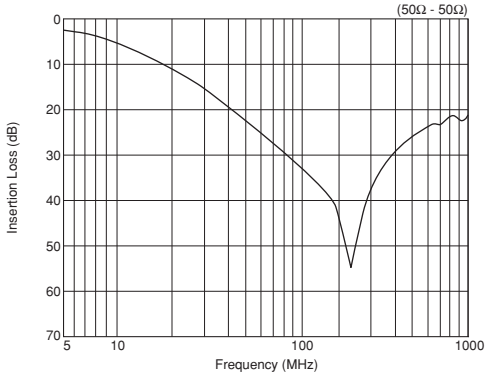

# Signal Line VFS6V Series

## ■ Features

VFS6V series is designed for surge protection of signal line. It protects electric circuit from surges such as static electricity and suppresses EMI noise. Built-in ferrite bead gives excellent EMI suppression.

## ■ Applications

Elimination of noise and protection of electric circuits in office equipment, including computers and peripheral equipment, copy machines, and communication terminals.

VFS6V Series

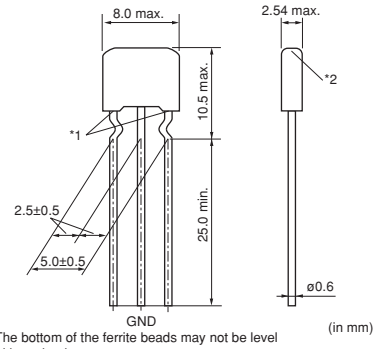


*1 The bottom of the ferrite beads may not be level with each other.
*2 There may be a hole on the top of ferrite beads, which causes no characteristics deterioration.

| Part Number | Varistor Voltage (Vdc) | Capacitance (pF) | Rated Voltage (Vdc) | Rated Current (A) | Peak Pulse Current (A) | Operating Temperature Range |
|---|---|---|---|---|---|---|
| **VFS6VD81E221** | 50 ±20% | 220 ±20% | 25 | 6 | 100 | -40 to 105°C |

Please refer to Part Numbering for Type and Length of Lead.

## ■ Equivalent Circuit

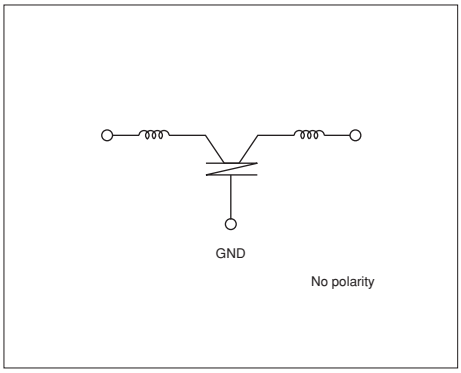


## ■ Insertion Loss Characteristics

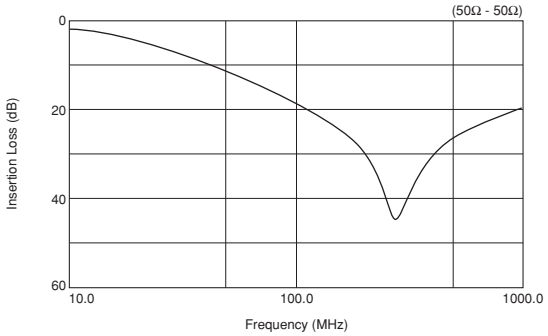

# Large Current VFS9V Series

## ■ Features

VFS9V series is designed for surge protection of the power supply. It protects electric circuits from surge such as static electricity and suppresses EMI noise. Its large capacitance value enables high insertion loss for EMI noise.

## ■ Applications

For circuit protection and noise suppression in electronics equipment such as computers and DC motors, and in electronics systems installed in cars such as car audio equipment and engine controllers.

VFS9V Series

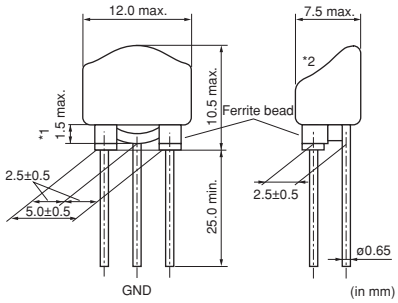


*1 Coating extending on leads does not exceed the tangent line. Exposed electrode, if any, is covered by solder, etc.
*2 If there is a hole in the top of the filter, the ferrite bead should not be exposed.

| Part Number | Varistor Voltage (Vdc) | Capacitance (pF) | Rated Voltage (Vdc) | Rated Current (A) | Operating Temperature Range |
|---|---|---|---|---|---|
| **VFS9VD31B223** | 22 ±20% | 22000 +50/-20% | 12 | 7 | -40 to 100°C |

Rated current is 7A for bulk type and 6A for taping type.
Rated current of taping type is 6A because the diameter of the lead is 0.6mm and its lead layout is the in-line type.
Please refer to Part Numbering for Type and Length of Lead.

## ■ Equivalent Circuit

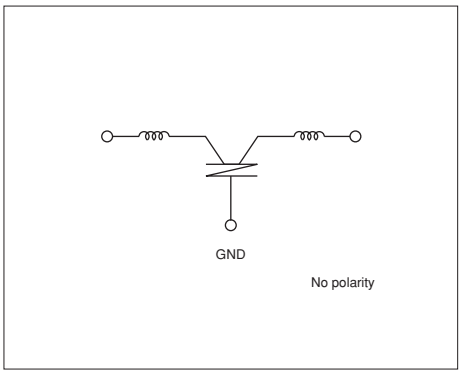


## ■ Insertion Loss Characteristics

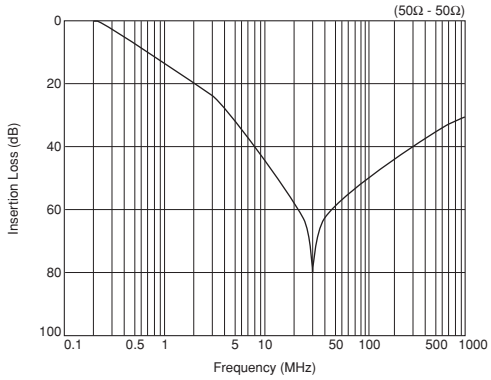


## ■ Voltage - Current Characteristics

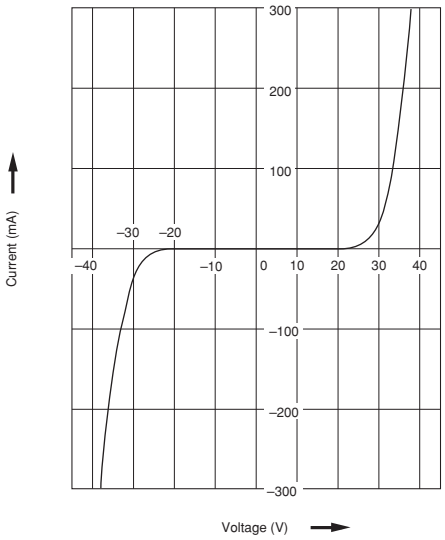

# Noise Suppression Effect of VFR/VFS Series

## ■Example of IC Protection (VFR3V)

● Testing Method

1. Put ESD surge to IC (7404 family) input terminal with ESD simulator based on IEC 801-2.
2. Check IC's operation.
3. If IC's operation is normal, increase ESD voltage in 1kV steps.
4. Continue above steps 1 to 3 till IC's operation becomes abnormal.

Test Circuit

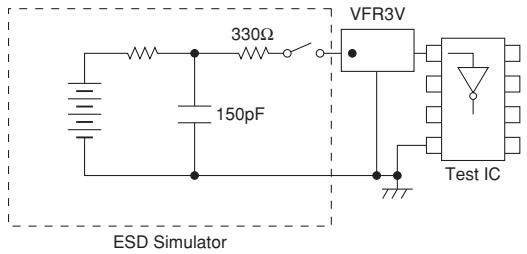


● Result

Varistor VFR3V can protect IC from ESD.

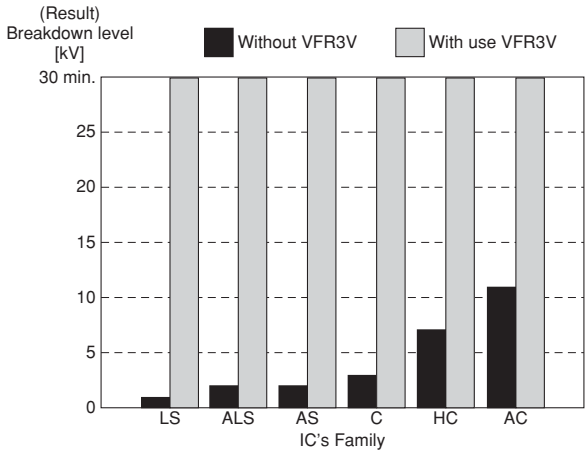


## ■Example of EMI Suppression Effect

Test Circuit

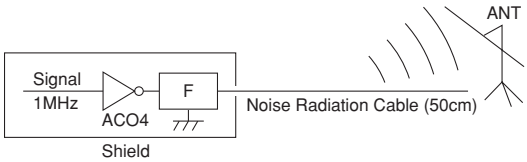


| Type of Filter | EMI Suppression Effect |
|---|---|
| Before Countermeasures (No Filters) | 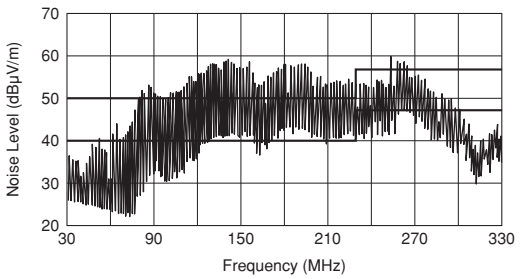  |
| Using **VFR3VD31E131T51** | 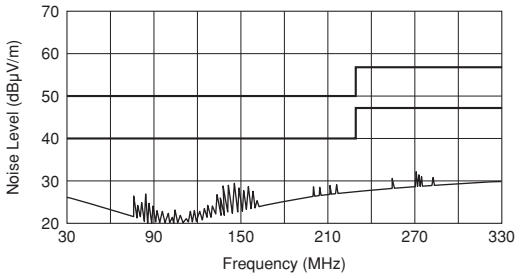  |

# Noise Suppression Effect of VFR/VFS Series

## ■Features (VFS9V)

| Items | Test methods | Rated values |
|---|---|---|
| Overload | 1.4 times the varistor voltage ($V_1$) is applied for 5 minutes at room temperature. | |
| Surge Test (1) | At room temperature, Surges are applied $10^5$ times every 2 seconds. Then after 1 or 2 hours, the sample is measured. 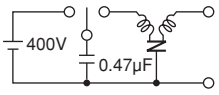  | |
| Surge Test (2) | At room temperature, the capacitor "C" is charged with 70V, then discharged to apply the voltage to the sample. Tested once (resuming JASO A-1). 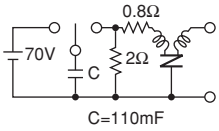  | |
| High Temperature Load | At a temperature of 85±3°C, the varistor voltage $V_1$ is continuously applied to the sample for 1000 to 1024 hours. Then it is left at room temperature, for 4 to 24 hours before measuring. | |

| Items | Specifications |
|---|---|
| Rated Capacitance Change | Within±15% |
| Insulation Resistance | 500kΩ min. |
| Rated of Change in Varistor Voltage $V_1$* | Within±15% |
| Voltage Rate | 1.30 max. |

*$V_1$: Voltage when 1mA is applied

## ■Pulse-Voltage Breakdown Characteristic (VFS9V)

VFS9V EMIGUARD® use a self healing varistor- capacitor, so that it can be used under a 500 to 600V surge that would break conventional disc type EMI filters. As shown in the figure below EMIGUARD® withstands 2000V impulses applied 1000 times.

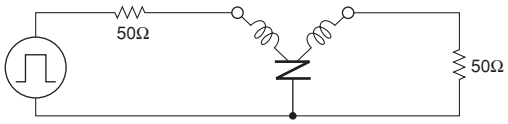


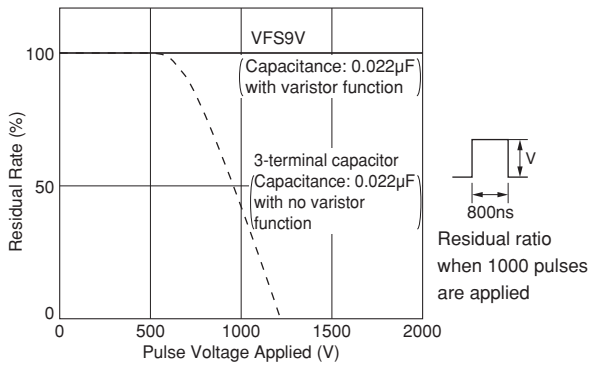


## ■Temperature Characteristics of Varistor Voltage - Insulation Resistance (VFS9V)

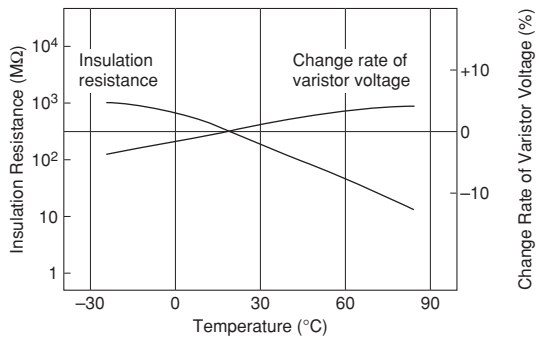


Continued on the following page.

# Noise Suppression Effect of VFR/VFS Series

Continued from the preceding page.

## ■Noise Absorption Effect of EMIGUARD® (VFS9V)

| Type of Filter | EMI Suppression Effect | Description |
|---|---|---|
| without EMIGUARD® | 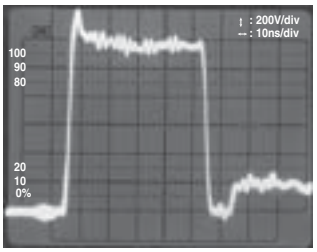  | Waveform when EMIGUARD® is not used.<br>(Surge from a noise simulator.) |
| with EMIGUARD® 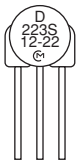  | 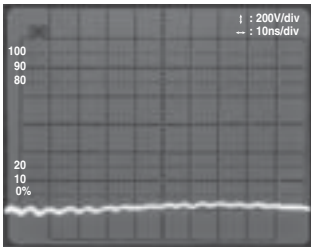  | Waveform after the noise passed through EMIGUARD®. Little noise is recorded. |

## ■Comparative Data (VFS9V)

### 1. Absorption of quick-rising, high-frequency noise (10ns/div, 100V/div)

| Type of Filter | EMI Suppression Effect | Description |
|---|---|---|
| Without Filters | 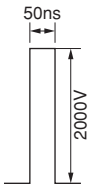  Noise wave applied | |
| Conventional varistor 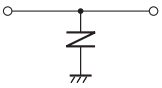 | 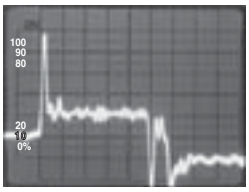  | As with the two-terminal capacitor |
| Two-terminal capacitor (with varistor function) 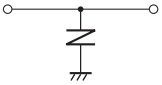 | 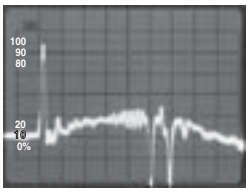  | The two-terminal capacitor is influenced by lead line inductance, leaving behind some of the rising and falling edges. The residual noise can cause the system to malfunction. |
| VFS9V | 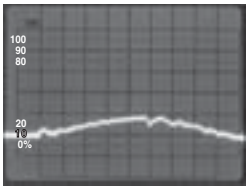  | The three-terminal structure eliminates most of the lead line inductance. This allows VFS9V to completely absorb the rising and falling edges of the applied pulses. |

Continued on the following page.

# Noise Suppression Effect of VFR/VFS Series

Continued from the preceding page.

## 2. Absorption of wide-pulse noise (50ns/div, 200V/div)

| Type of Filter | EMI Suppression Effect | Description |
|---|---|---|
| Without Filters | 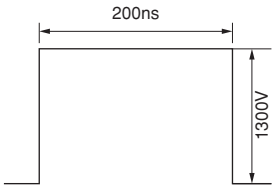  Noise wave applied | |
| Two-terminal capacitor 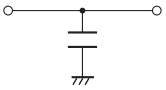 | 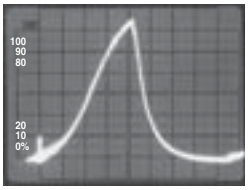  | In capacitors the voltage of the residual surge (1300V) is higher than that of the above example. The wave height is almost the same as the original. |
| Three-terminal capacitor (with ferrite bead) 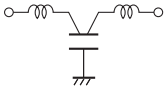 | 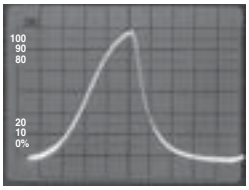  | Conventional EMI filters do not work for wide-pulse noise because the capacitors are saturated. In this example, the residual 1200V surge can cause the system to break down. |
| VFS9V | 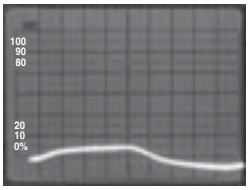  | Bypassing the high voltage to the ground suppresses the voltage. |

# EMI Suppression Filters (Lead Type EMIFIL®)

## Common Mode Choke Coils Part Numbering

### Common Mode Choke Coils

(Part Number)

| PL | T | 09H | N | 200 | 3R0 | P | 1 | B |
|---|---|---|---|---|---|---|---|---|
| ❶ | ❷ | ❸ | ❹ | ❺ | ❻ | ❼ | ❽ | ❾ |

❶Product ID

| Product ID | |
|---|---|
| PL | Common Mode Choke Coils |

❷Type

| Code | Type |
|---|---|
| T | DC Type |

❸Applications

| Code | Applications |
|---|---|
| 09H | for DC Line High-frequency Type |

❹Features

| Code | Features |
|---|---|
| N | General Use |

❺Inductance

Expressed by three figures. The unit is micro-henry (μH). The first and second figures are significant digits, and the third figure expresses the number of zeros that follow the two figures.

❻Rated Current

Expressed by three-digit alphanumerics. The unit is in amperes (A). A decimal point is expressed by the capital letter "**R**". In this case, all figures are significant digits.

❼Winding Mode

| Code | Winding Mode |
|---|---|
| P | Aligned Winding Type |

❽Lead Dimensions

| Code | Lead Dimensions |
|---|---|
| 1 | 5mm |

❾Packaging

| Code | Packaging | Series |
|---|---|---|
| B | Bulk | All series |

# EMI Suppression Filters (Lead Type EMIFIL®)

## Common Mode Choke Coils (for DC Line) PLT09H Series

PLT09H series is a common mode choke coil for DC lines. It is effective against the common mode noise that can cause radiative noise in power supply lines and interface lines. The additional normal mode inductance enables high suppression effect to radiation noise.

PLT09H Series

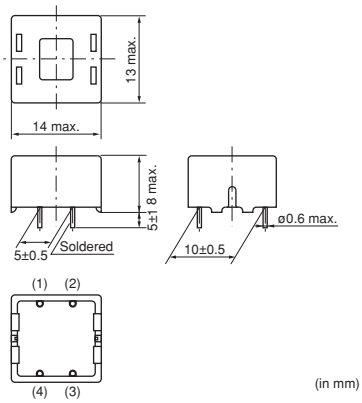


### ■ Features

1. This is a wide frequency range type, applicable in applications ranging from a few MHz to several 100MHz.
2. It features a low-profile design.

### ■ Applications

1. Noise suppression of SW power supply, DC-DC converter
2. DC power lines in AC adapter of Portable equipment

| Part Number | Rated Current (A) | Rated Voltage (Vdc) | Withstand Voltage (Vdc) | Common Mode Inductance (μH) |
|---|---|---|---|---|
| **PLT09HN2003R0P1** | 3 | 50 | 125 | 20 min. |

Operating Temperature Range: -40 to +85°C

### ■ Equivalent Circuit

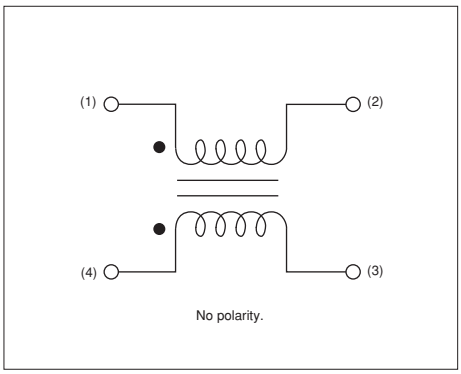


### ■ Insertion Loss Characteristics

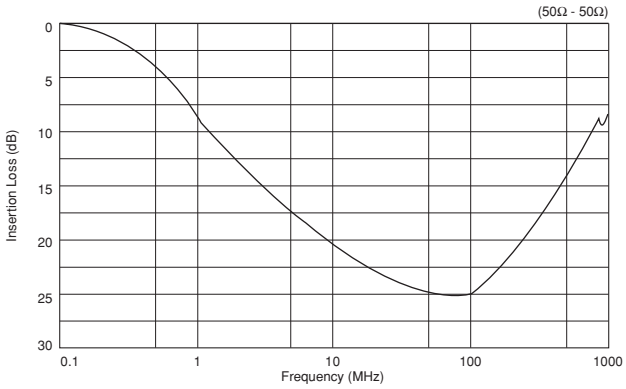

# ⚠Caution/Notice

## ⚠Caution

### ● Rating

Do not use products beyond the rated current and rated voltage as this may create excessive heat and deteriorate the insulation resistance.

### ● Soldering and Mounting

1. Mounting holes should be designed as specified in these specifications. Other designs than those shown in these specifications may cause cracks in ceramics that may lead to smoking or firing.
2. DSN9/DST9/DSN9H/DST9H/VFS9V Series
   Mounting for PCB. (Applis only to bulk type.)
   The form of the mounting hole of the bulk item is a triangle. The product should be inserted and soldered to each hole in the correct way as in Fig.1. (The center terminal and the other terminals become parallel when viewing the product from the side.) Smoking and firing maybe caused by incorrect mounting as in Fig.2. (The center terminal and the other terminals cross when viewing the product from the side.)

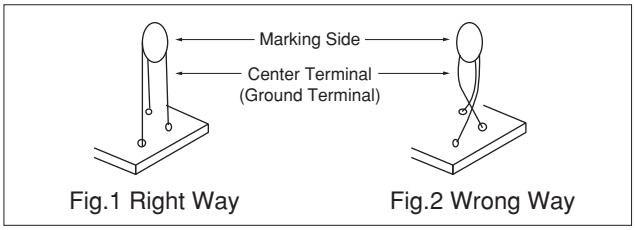


Fig.1 Right Way　　Fig.2 Wrong Way

3. Take care not to apply any mechanical stress to product body at the lead terminal bending process for product angle adjustment after insertion.
   For DST9, please do not bend the lead terminal at the point between the dielectric part and the ferrite bead.

## Notice

### ● Storage and Operating Conditions

<Operating Environment>

1. Do not use products in a chemical atmosphere such as chlorine gas, acid or sulfide gas.
2. Do not use products near water, oil or organic solvents. Avoid environments where dust or dirt may adhere to the product.

<Storage and Handling Requirements>

1. Storage Period
   Use the products within 12 months after delivery. Solderability should be checked if this period is exceeded.
2. Storage Conditions
   (1) Storage temperature: -10 to 40 degrees C
   Relative humidity: 15 to 85%
   Avoid sudden changes in temperature and humidity.
   (2) Do not store products in a chemical atmosphere such as chlorine gas, acid or sulfide gas.
   (3) When restoring taping type (BL01RN1A1F1J), please attach the spacer between the flanges of the reel. The spacer is corrugated paper that is attached when shipping.

<Using EMIGUARD® effectively>

1. Terminal (with mark) should be properly connected to the line of incoming electrostatic surge. (There is polarity.) Otherwise, no effect in ESD suppression can be expected (VFR3V).

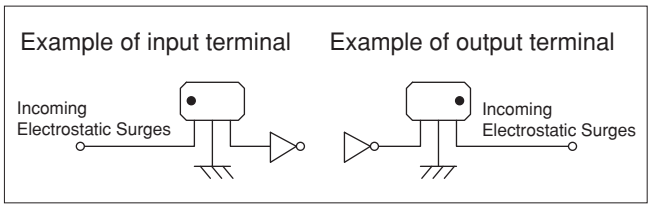


2. Products should be used at rated voltage or less and rated current or less.
3. Products should not be applied for the absorption of surges that have large energy (e.g., induced lightning surges, switching surges) because it is designed for the absorption of electrostatic surges (VFR3V).
4. Electrostatic testing should be done on the following conditions (VFR3V).
   $n \cdot [ C / R \cdot V^2 ]^2 < 8.0 \times 10^5$
   n: Times applied
   C: Charging Capacitance (pF)
   V: Testing Voltage (kV)
   R: Charging Resistance (Ω)

### ● Soldering and Mounting

1. Washing
   Failure and degradation of a product are caused by the washing method. When you wash in conditions that are not in the mounting information, please contact Murata engineering.
2. Soldering
   Reliability decreases with improper soldering methods. Please solder by the standard soldering conditions shown in the mounting information.
3. Other
   Noise suppression levels resulting from Murata's EMI suppression filters EMIFIL® may vary, depending on the circuits and ICs used, type of noise, mounting pattern, lead wire length, mounting location, and other operating conditions. Be sure to check and confirm in advance the noise suppression effect of each filter, in actual circuits, etc. before applying the filter in a commercial-purpose equipment design.

# Soldering and Mounting

## 1. Mounting Hole

Mounting holes should be designed as specified below.

| Part Number | Bulk Type (in mm) | Taping Type (in mm) |
|---|---|---|
| **DSN6**<br>**DSS6**<br>**VFR3V**<br>**VFS6V**<br>**DSS1** | 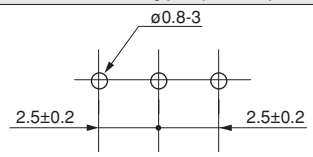 | 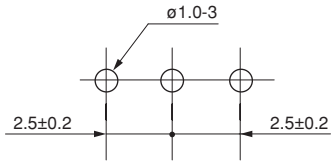 |
| **DSN9**<br>**DSN9H** | 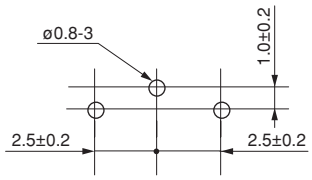 | |
| **DST9**<br>**DST9H** | 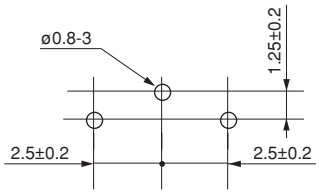 | |
| **VFS9V** | 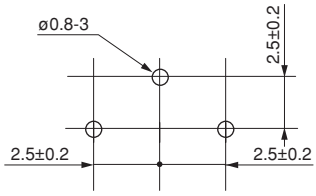 | |
| **VFC2H** | 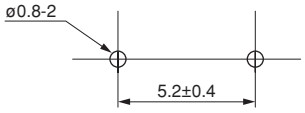 | 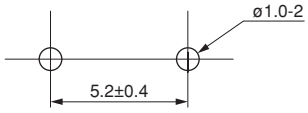 |

## 2. Soldering

(1) Use Sn-3.0Ag-0.5Cu solder.
(2) Use Rosin-based flux. Do not use strong acidic flux with halide content exceeding 0.2wt% (chlorine conversion value).
(3) Products and the leads should not be subjected to any mechanical stress during the soldering process, or while subjected to the equivalent high temperatures.
(4) Standard flow soldering profile.

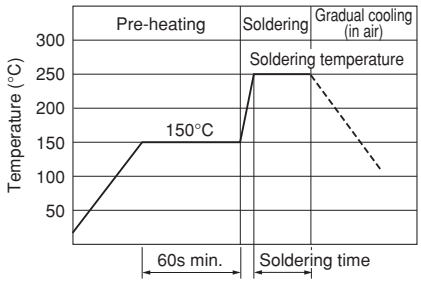


| Solder | Soldering Temperature | Soldering Time |
|---|---|---|
| Sn-3.0Ag-0.5Cu solder | 250 to 260°C | 4 to 6s |

Continued on the following page.

# Soldering and Mounting

Continued from the preceding page.

3. Cleaning Conditions

Do not clean VFR3V, PLT09H and VFS6V series.
Clean other parts in the following conditions.

(1) Cleaning temperature should be limited to 60°C max. (40°C max for alcohol type cleaner).
(2) Ultrasonic cleaning should comply with the following conditions, avoiding the resonance phenomenon at the mounted products and PCB.
Power: 20 W / ℓ max. Frequency: 28 to 40kHz
Time: 5 min. max.
(3) Cleaner
(a) Alcohol type cleaner
Isopropyl alcohol (IPA)
(b) Aqueous agent (PLT series cannot be cleaned)
PINE ALPHA ST-100S
(4) There should be no residual flux or residual cleaner left after cleaning.
In the case of using aqueous agent, products should be dried completely after rinsing with de-ionized water in order to remove the cleaner.
(5) The surface of products may become dirty after cleaning, but there is no deterioration on mechanical, electrical characteristics and reliability.
(6) Other cleaning: Please contact us.

# Packaging

## ■ Minimum Quantity (Pcs.)

| Series | Bulk | Ammo Pack | ø320mm Paper Reel |
|---|---|---|---|
| **BL01RN** | 500 | 1000 | 2000 |
| **BL02RN** | 500 | 1500 | — |
| **BL03RN** | 1000 | 2000 | — |

## ■ Taping Dimensions

**BL01RN_J**
**BL01RN_A**

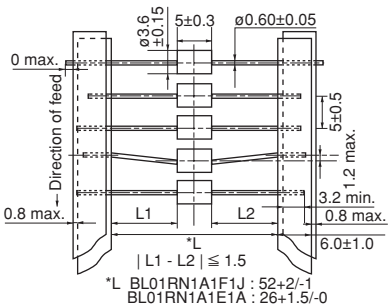


**BL02RN1R2□1A**

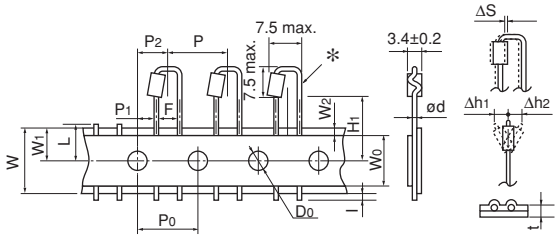


✻There is excess bond stick on the wire.

**BL02RN1R3N1A**

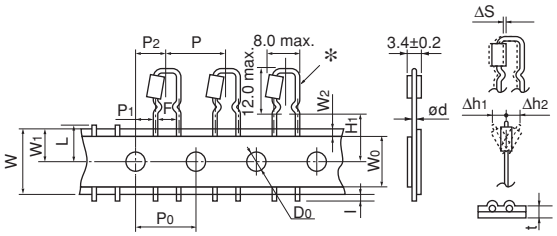


✻There is excess bond stick on the wire.

**BL02RN2R1□1A**

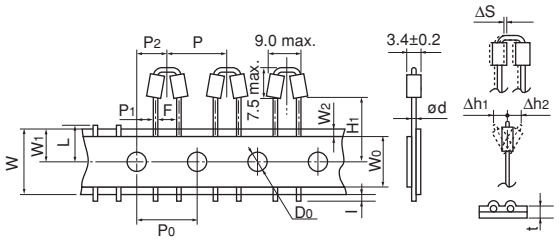


**BL02RN2R3N1A**

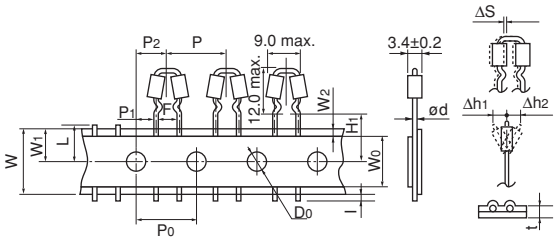


**BL03RN2R1□1A**

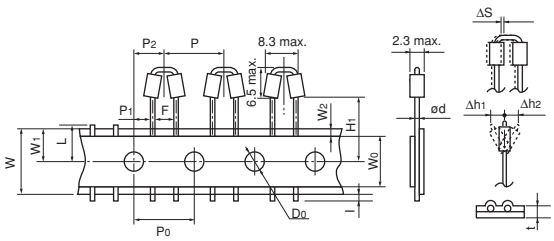


| Description | Symbol | Dimension (mm) | | Remarks |
|---|---|---|---|---|
| Pitch of component | P | 12.7 | | Product inclination ΔS determines tolerance |
| Pitch of sprocket hole | $P_0$ | 12.7±0.2 | | |
| Lead spacing | F | $5.0^{+0.8}_{-0.2}$ | | |
| Hole center to lead | $P_1$ | 3.85±0.7 | | |
| Hole center to component center | $P_2$ | 6.35±1.3 | | Tape deviation in feeding direction |
| Offset of bead | ΔS | ±1.0 | | Including the offset caused by lead bend |
| Carrier tape width | W | 18.0±0.5 | | |
| Position of sprocket hole | $W_1$ | $9.0^{+0}_{-0.5}$ | | Tape with deviation |
| Lead length between sprocket hole and forming position | $H_1$ | Lead Length Number : N | 16.5±0.5 | **BL02, BL03** |
| | | Lead Length Number : Q | 20.0±0.5 | **BL02RN1R2/2R1, BL03** |
| | | Lead Length Number : P | 18.5±0.5 | **BL02, BL03** |
| Protruding length | I | +0.5 to –1.0 | | |
| Diameter of sprocket hole | $D_0$ | ø4.0±0.1 | | |
| Lead Diameter | ød | ø0.60 | | |
| Total tape thickness | t | 0.7±0.2 | | Including bonding tape thickness |
| Deviation across tape, Deviation across tape rear | $\Delta h_1$, $\Delta h_2$ | 1.0 max. | | |
| Cutting position of failure | L | $11.0^{+0}_{-1.0}$ | | |
| Hold down tape width | $W_0$ | 12.0±0.5 | | |
| Hold down tape position | $W_2$ | 1.5±1.5 | | |

(in mm)

# Packaging

## ■ Minimum Quantity

| Part Number | Minimum Order Quantity (order in sets only) (pcs.) | | |
|---|---|---|---|
| | Ammo Pack | ø320mm Paper Reel | Bulk (Bag) |
| **VFR3V Series** | 2000 | — | 250 |
| **DS□6/VFS6V Series** | 2000 | — | 250 **Q55/T51**<br>500 **Q54/Q56/T41** |
| **DSN9/9H Series** | 2000 | — | 250 **Q55**<br>500 **Q54/Q56** |
| **DST9 Series** | 1000 | — | 200 **Q55**<br>250 **Q50/Q52** |
| **VFS9V Series** | — | 800 | 200 |
| **VFC2H Series** | 2000 | 2000 | 500 |
| **DSS1 Series** | 1500 | 1500 | 250 |

## ■ Lead Type Code

| Lead Type Code | | Lead Length (H) |
|---|---|---|
| Straight Type | Incrimp Type | |
| **Q91** | - | 20.0±1.0mm |
| **Q92** | **U21** | 16.5±1.0mm |
| **Q93** | **U31** | 18.5±1.0mm |

| Lead Type Code | Lead Length (from bottom of the crimp) |
|---|---|
| Inside Crimp | |
| **K1B** | 26.0±1.0mm |
| **M1A** | 18.0±1.0mm |
| **M1J** | |

## ■ Taping Dimensions

**DSN6_Q91/Q92/Q93**
**DSN9_Q91/Q92/Q93**

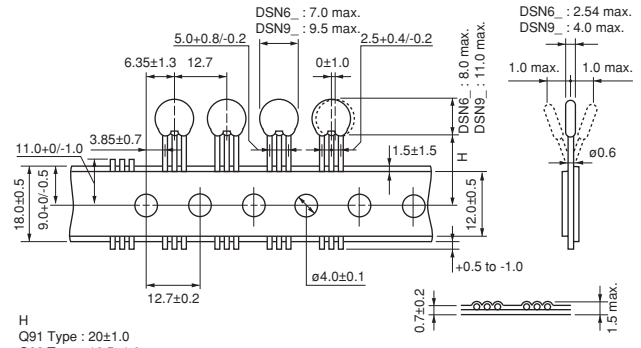


H
Q91 Type : 20±1.0
Q92 Type : 16.5±1.0
Q93 Type : 18.5±1.0

**DSS1_Q91**

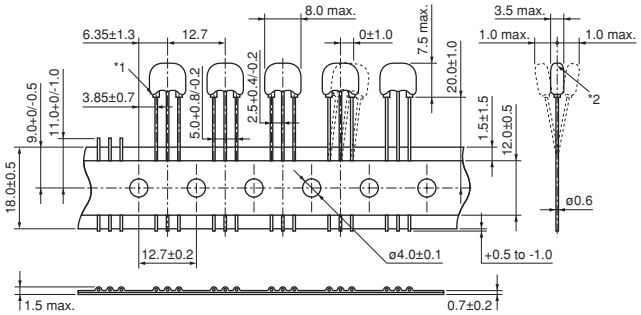


*1 The bottom of the dielectric may be exposed.
*2 If a hole is on the top of the ferrite bead, the bead should not be exposed.

**DSS6_Q91/Q92/Q93**

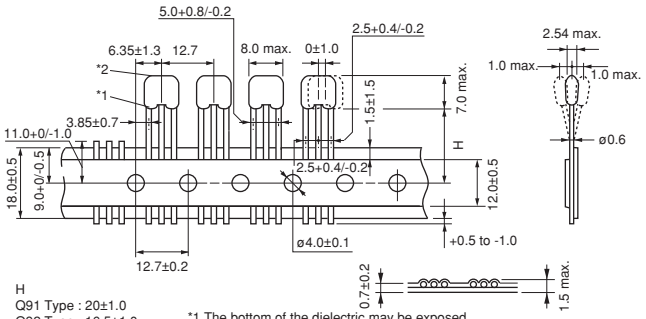


H
Q91 Type : 20±1.0
Q92 Type : 16.5±1.0
Q93 Type : 18.5±1.0

*1 The bottom of the dielectric may be exposed.
*2 If a hole is on the top of the ferrite bead, the bead should not be exposed.

**DST9_Q92/93**

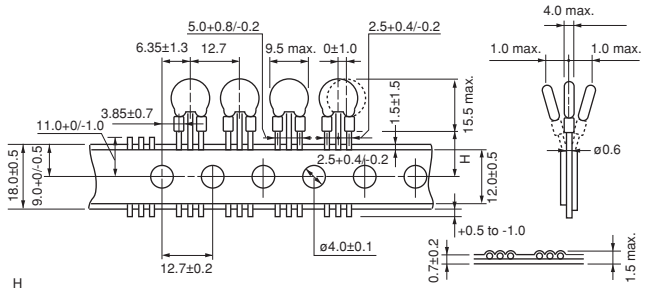


H
Q92 Type : 16.5±1.0
Q93 Type : 18.5±1.0

**DSS6_U21/U31**
**VFS6V_U31**

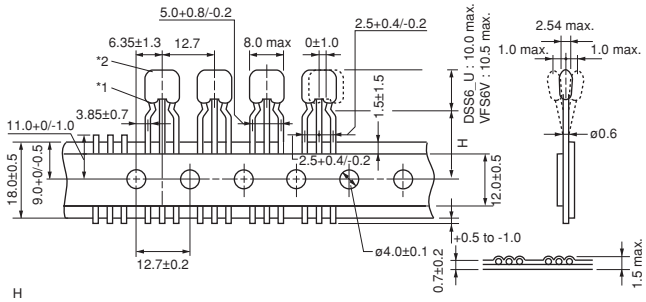


H
U21 Type : 16.5±1.0
U31 Type : 18.5±1.0

*1 The bottom of the dielectric may be exposed.
*2 If a hole is on the top of the ferrite bead, the bead should not be exposed.

**VFS9V_Q91/Q92/Q93**

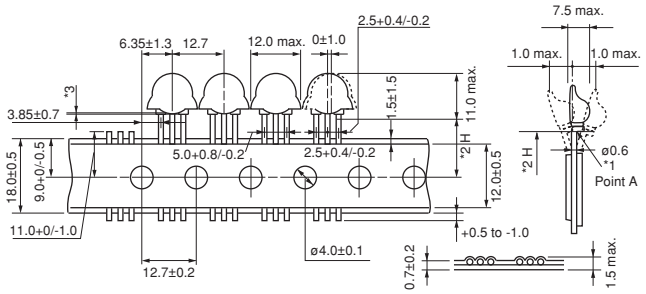


H
Q91 Type : 20±1.0
Q92 Type : 16.5±1.0
Q93 Type : 18.5±1.0

*1 Coating extending on leads does not exceed the start of the bend (point A). Exposed electrodes are covered with solder.
*2 H: to be measured from the forming point A.
*3 The deviation between two ferrite beads should be less than 1.2mm.

(in mm)

Continued on the following page.

# Packaging

Continued from the preceding page.

## ■ Taping Dimensions

**VFR3V_U31**

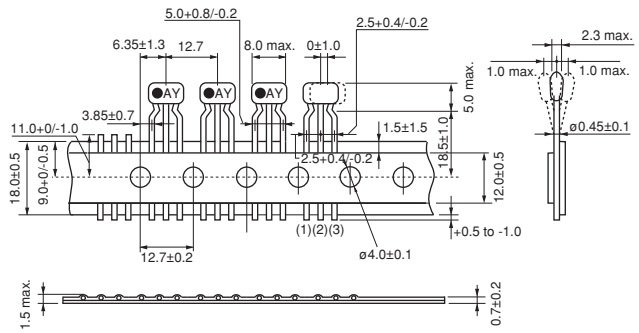


**VFC2H_M1**

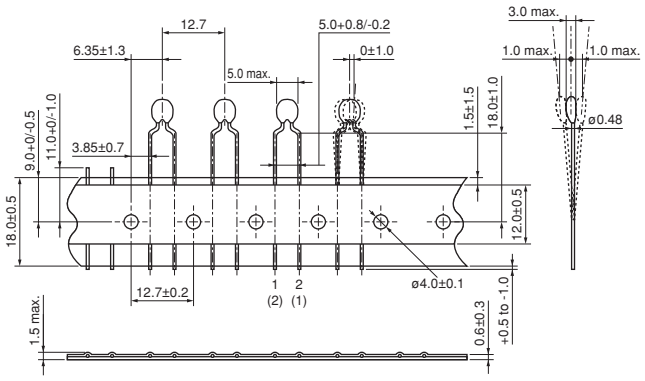


(in mm)

# Global Locations

For details please visit www.murata.com

## ⚠Note

**1 Export Control**

*For customers outside Japan:*

No Murata products should be used or sold, through any channels, for use in the design, development, production, utilization, maintenance or operation of, or otherwise contribution to (1) any weapons (Weapons of Mass Destruction [nuclear, chemical or biological weapons or missiles] or conventional weapons) or (2) goods or systems specially designed or intended for military end-use or utilization by military end-users.

*For customers in Japan:*

For products which are controlled items subject to the "Foreign Exchange and Foreign Trade Law" of Japan, the export license specified by the law is required for export.

**2** Please contact our sales representatives or product engineers before using the products in this catalog for the applications listed below, which require especially high reliability for the prevention of defects which might directly damage a third party's life, body or property, or when one of our products is intended for use in applications other than those specified in this catalog.

1. *Aircraft equipment*
2. *Aerospace equipment*
3. *Undersea equipment*
4. *Power plant equipment*
5. *Medical equipment*
6. *Transportation equipment (vehicles, trains, ships, etc.)*
7. *Traffic signal equipment*
8. *Disaster prevention / crime prevention equipment*
9. *Data-processing equipment*
10. *Application of similar complexity and/or reliability requirements to the applications listed above*

**3** Product specifications in this catalog are as of May 2014. They are subject to change or our products in it may be discontinued without advance notice. Please check with our sales representatives or product engineers before ordering. If there are any questions, please contact our sales representatives or product engineers.

**4** Please read rating and ⚠CAUTION (for storage, operating, rating, soldering, mounting and handling) in this catalog to prevent smoking and/or burning, etc.

**5** This catalog has only typical specifications. Therefore, please approve our product specifications or transact the approval sheet for product specifications before ordering.

**6** Please note that unless otherwise specified, we shall assume no responsibility whatsoever for any conflict or dispute that may occur in connection with the effect of our and/or a third party's intellectual property rights and other related rights in consideration of your use of our products and/or information described or contained in our catalogs. In this connection, no representation shall be made to the effect that any third parties are authorized to use the rights mentioned above under licenses without our consent.

**7** No ozone depleting substances (ODS) under the Montreal Protocol are used in our manufacturing process.

**Murata Manufacturing Co., Ltd.**

www.murata.com

muRata
INNOVATOR IN ELECTRONICS