Three Phase Rectifier Bridge

I_{dAV} = 39 A
V_{RRM} = 800/1200 V

Preliminary data

V_{RSM} V_{DSM} V	V_{RRM} V_{DRM} V	Type	
900	800	VTO 39-08ho7	VVZ 39-08ho7
1300	1200	VTO 39-12ho7	VVZ 39-12ho7

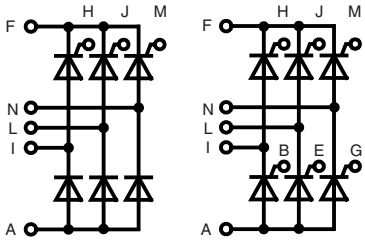

VVZ 39 VTO 39

VVZ 39

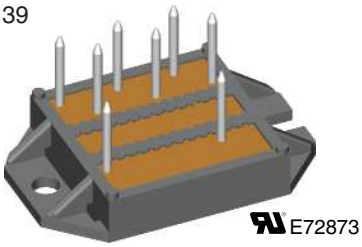

VTO 39

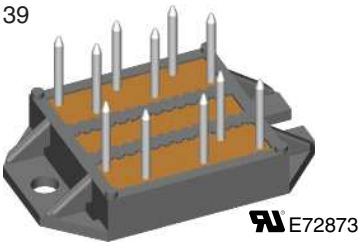

Symbol	Conditions			Maximum Ratings	
I_{dAV} ①	T_C = 85°C; module			39	A
I_{TAVM}	T_C = 85°C (180° sine; per thyristor)			16	A
I_{TSM}	T_{VJ} = 45°C	t = 10 ms	(50 Hz)	200	A
	V_R = 0	t = 8.3 ms	(60 Hz)	210	A
	T_{VJ} = T_{VJM}	t = 10 ms	(50 Hz)	180	A
	V_R = 0	t = 8.3 ms	(60 Hz)	190	A
I^2t	T_{VJ} = 45°C	t = 10 ms	(50 Hz)	200	A^2s
	V_R = 0	t = 8.3 ms	(60 Hz)	150	A^2s
	T_{VJ} = T_{VJM}	t = 10 ms	(50 Hz)	160	A^2s
	V_R = 0	t = 8.3 ms	(60 Hz)	150	A^2s
$(di/dt)_{cr}$	T_{VJ} = T_{VJM}; f = 50 Hz; t_p = 200 µs; V_D = $^2/_3$ V_{DRM}; I_G = 0.15 A; di_G/dt = 0.15 A/µs		repetitive; I_T = 20 A	100	A/µs
			non repetitive; I_T = I_{TAVM}	500	A/µs
$(dv/dt)_{cr}$	T_{VJ} = T_{VJM}; V_D = $^2/_3$ V_{DRM}; R_{GK} = ∞, method 1 (linear voltage rise)			500	V/µs
V_{RGM}				10	V
P_{GM}	T_{VJ} = T_{VJM}	t_p = 30 µs		≤ 5	W
	I_T = I_{TAVM}	t_p = 300 µs		≤ 2.5	W
P_{GAVM}				0.5	W
T_{VJ}				-40...+125	°C
T_{VJM}				125	°C
T_{stg}				-40...+125	°C
V_{ISOL}	50/60 Hz, RMS	t = 1 min		2500	V~
	I_{ISOL} ≤ 1 mA	t = 1 s		3000	V~
M_d	Mounting torque (M4)			1.5 - 2	Nm
				14 - 18	lb.in.
Weight	Typ.			18	g

① for resistive load at bridge output.

Features

- Package with DCB ceramic base plate
- Isolation voltage 3000 V~
- Planar passivated chips
- Low forward voltage drop
- Leads suitable for PC board soldering

Applications

- Supplies for DC power equipment
- Input rectifiers for PWM inverter
- Battery DC power supplies
- Field supply for DC motors

Advantages

- Easy to mount with two screw
- Space and weight savings
- Improved temperature & power cycling capability
- Small and light weight

Data according to IEC 60747 and refer to a single diode unless otherwise stated

Disclaimer Notice

Information furnished is believed to be accurate and reliable. However, users should independently evaluate the suitability of and test each product selected for their own applications. Littelfuse products are not designed for, and may not be used in, all applications. Read complete Disclaimer Notice Disclaimer Notice at www.littelfuse.com/disclaimer-electronics.

IXYS reserves the right to change limits, test conditions and dimensions.

© 2020 IXYS All rights reserved

Symbol	Conditions		Characteristic Values		
I_D; I_R	$V_R = V_{RRM}$; $V_D = V_{DRM}$	$T_{VJ} = T_{VJM}$	≤	5	mA
V_T	$I_T = 20$ A	$T_{VJ} = 25°C$	≤	1.6	V
V_{T0}	For power-loss	$T_{VJ} = 125°C$		0.85	V
r_T	calculations only			27	mΩ
V_{GT}	$V_D = 6$ V	$T_{VJ} = 25°C$	≤	1.5	V
		$T_{VJ} = -40°C$	≤	2.5	V
I_{GT}	$V_D = 6$ V	$T_{VJ} = 25°C$	≤	25	mA
		$T_{VJ} = -40°C$	≤	50	mA
V_{GD}	$V_D = {}^2/_3 V_{DRM}$	$T_{VJ} = T_{VJM}$	≤	0.2	V
I_{GD}			≤	3	mA
I_L	$t_p = 10$ µs $I_G = 0.1$ A; $di_G/dt = 0.1$ A/µs	$T_{VJ} = 25°C$	≤	75	mA
I_H	$V_D = 6$ V; $R_{GK} = \infty$	$T_{VJ} = 25°C$	≤	50	mA
t_{gd}	$V_D = ½V_{DRM}$ $I_G = 0.1$ A; $di_G/dt = 0.1$ A/µs	$T_{VJ} = 25°C$	≤	2	µs
R_{thJC}	per thyristor / diode; DC			1.3	K/W
	per module			0.22	K/W
R_{thJH}	per thyristor / diode; DC			1.8	K/W
	per module			0.3	K/W
d_S	Creeping distance on surface			11.2	mm
d_A	Creepage distance in air			5	mm
a	Max. allowable acceleration			50	m/s^2

Dimensions in mm (1 mm = 0.0394“)

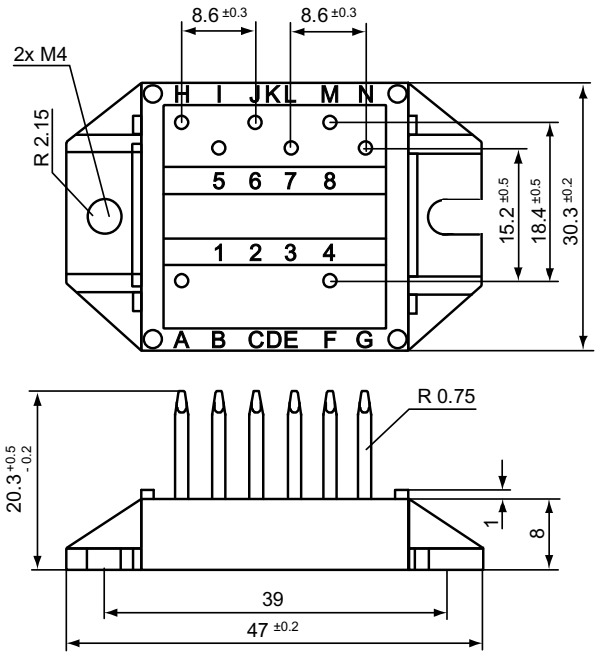

VVZ 39

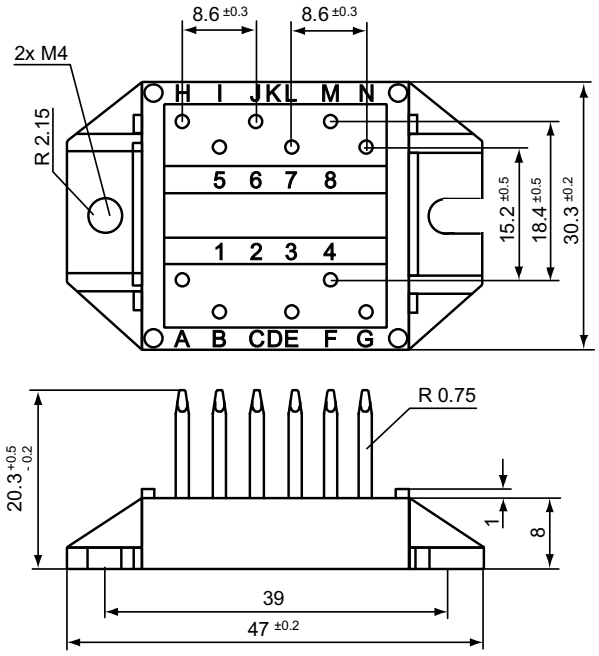

VTO 39

© 2020 IXYS All rights reserved