IP68

120×120×38 mm

San Ace 120W 9WP type

General Specifications

- Material ····· Frame: Plastic (Flammability: UL 94V-0), Impeller: Plastic (Flammability: UL 94V-1)
- Expected life ····· See the table below. (L10 life: 90% survival rate for continuous operation in indoor free air at 60˚C, rated voltage)
- Motor protection function ····· Locked rotor burnout protection, Reverse polarity protection
  For details, please refer to p. 547.
- Dielectric strength ····· 50/60 Hz, 500 VAC, for 1 minute (between lead wire conductors and frame)
- Insulation resistance ····· 10 MΩ or more with a 500 VDC megger (between lead wire conductors and frame)
- Sound pressure level (SPL) ····· At 1 m away from the air inlet
- Storage temperature ····· -30 to +70˚C (Non-condensing)
- Lead wire ····· ⊕Red ⊖Black Sensor Yellow
- Mass ····· 360 g
- Ingress protection ····· IP68

Specifications

The models listed below **have ribs and pulse sensors.** For models without ribs, append "1" to the end of model numbers.

Model no.	Rated voltage [V]	Operating voltage range [V]	Rated current [A]	Rated input [W]	Rated speed [min⁻¹]	Max. airflow [m³/min]	Max. airflow [CFM]	Max. static pressure [Pa]	Max. static pressure [inchH₂O]	SPL [dB (A)]	Operating temperature [˚C]	Expected life [h]
9WP1212H101	12	7 to 13.8	0.38	4.56	2600	2.8	99	70.4	0.283	39	-20 to +70	40000/60˚C
9WP1212M101			0.21	2.52	1950	2.1	74.2	39.6	0.159	32		
9WP1212L101		10.2 to 13.8	0.14	1.68	1500	1.62	57.2	23.4	0.094	26		
9WP1224H101	24	14 to 27.6	0.22	5.28	2600	2.8	99	70.4	0.283	39		
9WP1224M101			0.11	2.64	1950	2.1	74.2	39.6	0.159	32		
9WP1248H101	48	40.8 to 55.2	0.11	5.28	2600	2.8	99	70.4	0.283	39		
9WP1248M101			0.07	3.36	1950	2.1	74.2	39.6	0.159	32		

The following sensor and control options are available for selection.
Differs according to the model. Refer to the table on pp. 580 to 581. Without sensor Lock sensor

Airflow - Static Pressure Characteristics

9WP1212H101 With pulse sensor

Operating voltage range

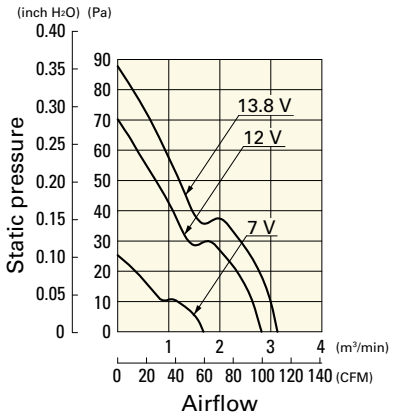

9WP1212M101 With pulse sensor

Operating voltage range

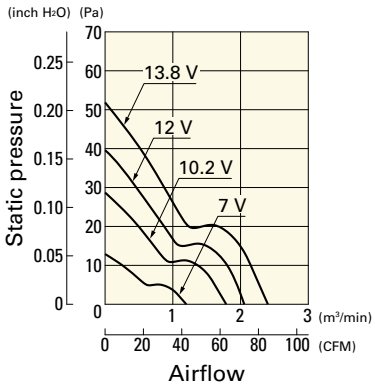

9WP1212L101 With pulse sensor

Operating voltage range

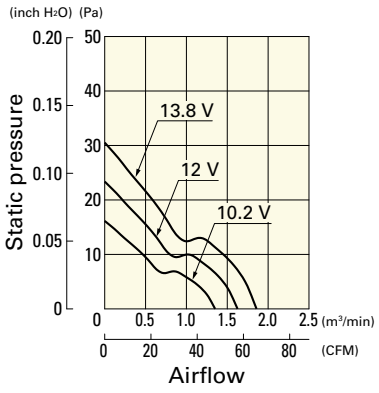

Airflow - Static Pressure Characteristics

9WP1224H101 With pulse sensor

Operating voltage range

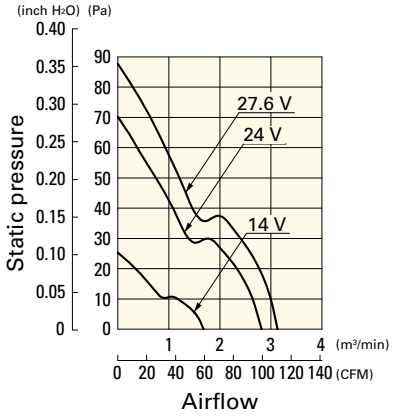

9WP1224M101 With pulse sensor

Operating voltage range

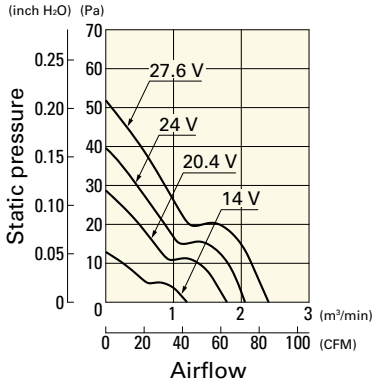

9WP1248H101 With pulse sensor

Operating voltage range

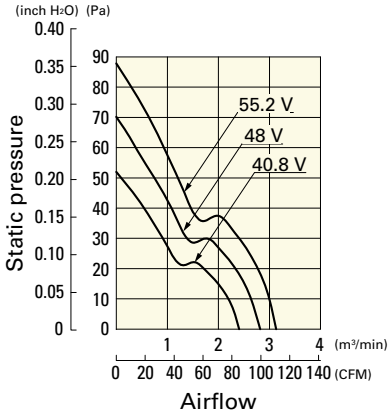

9WP1248M101 With pulse sensor

Operating voltage range

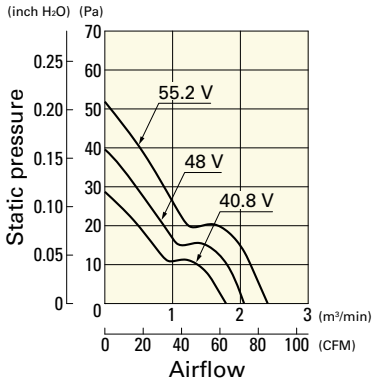

Dimensions (unit: mm) (With ribs)

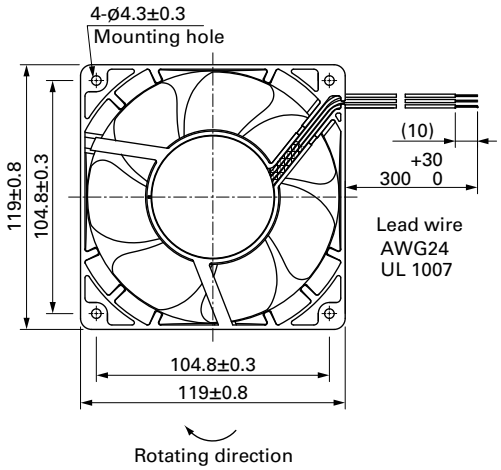

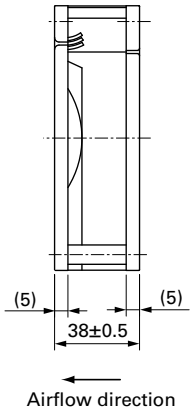

Reference Dimensions of Mounting Holes and Vent Opening (unit: mm)

Inlet side

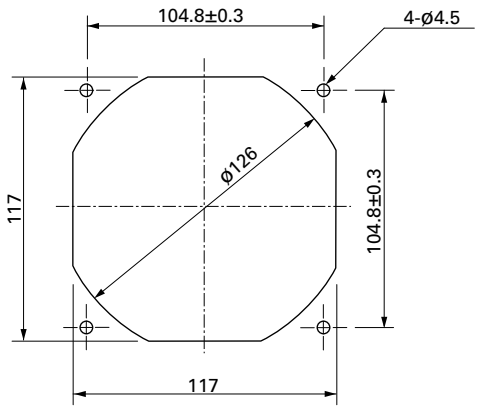

Outlet side

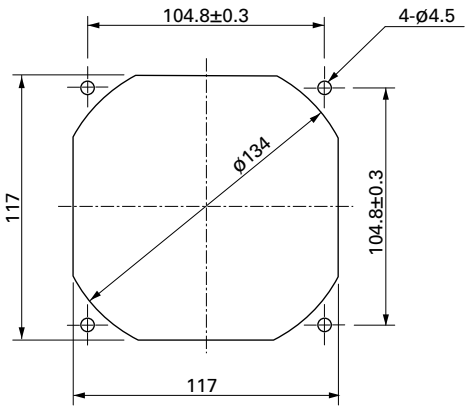

Options

Finger guards page: p. 533

Model no.: 109-019E, 109-019K, 109-019C, 109-019H

Resin finger guards page: p. 539

Model no.: 109-1000G