THIS DRAWING IS UNPUBLISHED
VERTRAULICHE UNVEROEFFENTLICHTE ZEICHNUNG
© COPYRIGHT 2007 TE Connectivity
RELEASED FOR PUBLICATION 17.OCT. 2007
FREI FUER VEROEFFENTLICHUNG
ALL RIGHTS RESERVED.
ALLE RECHTE VORBEHALTEN.

MATED WITH:
PASSEND ZU:

LOC	DIST
A1	–

PROJEKT NR.:

REVISIONS
AENDERUNGEN

P	LTR	DESCRIPTION BESCHREIBUNG	DATE	DWN	APVD
	E1	CUT OFF ADDED BY AREA LEAD-IN CHAMFER	31MAY2012	KHH	HEIN
	F1	LOCKING LATCHES OF FEMALE SHELL CHANGED	02OCT2013	SH	DO
	F2	TITLE BLOCK: NAME CHANGED	09OCT2015	ER	DO
	F3	REV. PER ECR-16-000458	12JAN2016	ER	DO

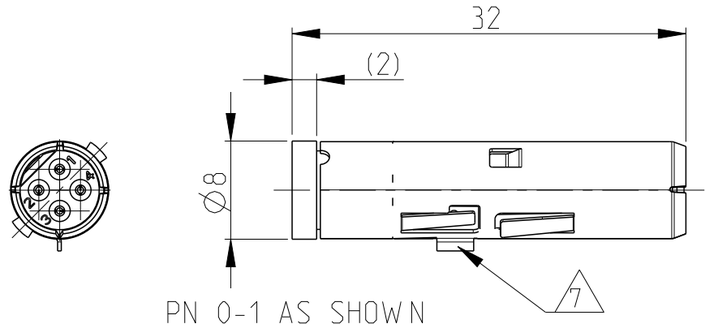

PN 0-1 AS SHOWN

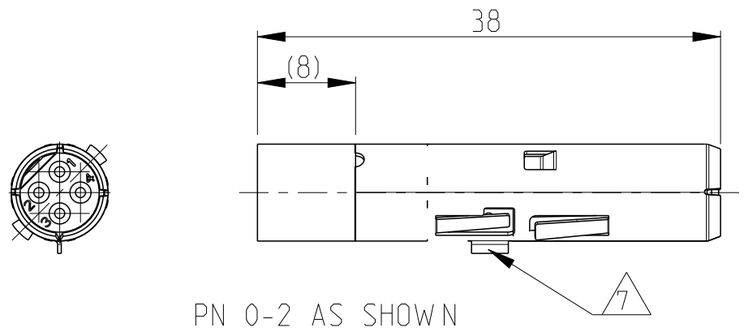

PN 0-2 AS SHOWN

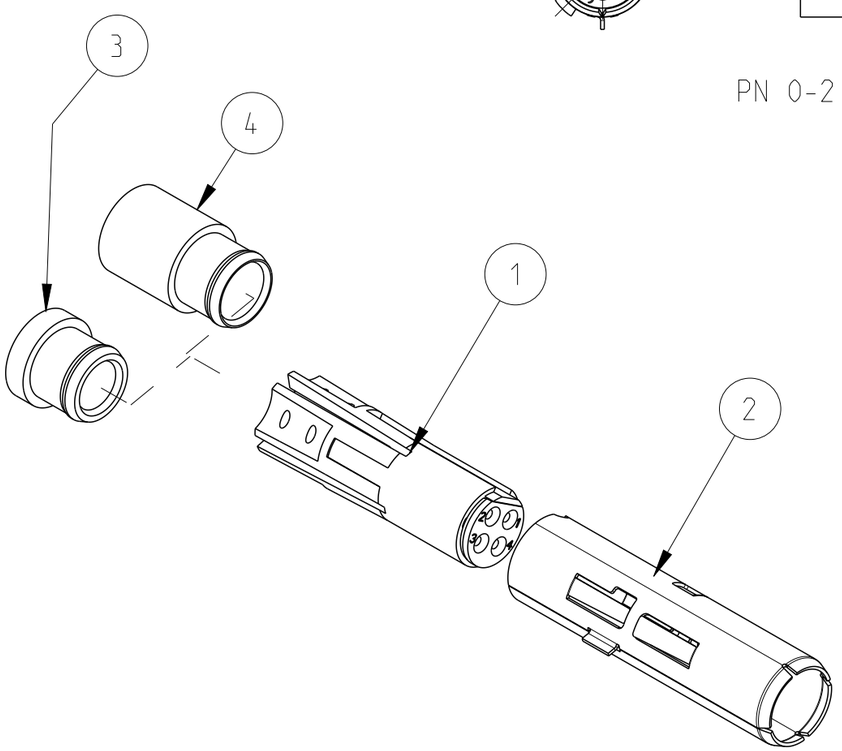

Notes

1 SUITABLE POWER INSERT: SERIES HC26
CUSTOMER DRAWING: 1103429

2 SUITABLE CAT5e CABLE:
CUSTOMER DRAWING: 1103536

3 SUITABLE CRIMP CONTACTS:
CUSTOMER DRAWING: 1658686

4 SUITABLE INSERTION TOOL:
CUSTOMER DRAWING: 91285

5 SUITABLE EXTRACTION TOOL:
CUSTOMER DRAWING: 91285

6 STANDARDS:
DIN EN 61984, DIN EN 60664-1

7 POLARIZATION RIP

8 FOR WIRE-SHIELDING DIAMETER 5.0

9 FOR WIRE-SHIELDING DIAMETER 4.2

10 PACKAGING:
40 SETS IN A CARTON, UNMOUNTED

PN/QTY 0-2	PN/QTY 0-1	DESCRIPTION	MATERIAL	COLOR/SURFACE	NOTE	ITEM
1	–	FERRULE	BRASS	SILVER PLATED	SERIES HC26, FEM. SHELL CRIMP VERSION 8	4
–	1	FERRULE	BRASS	SILVER PLATED	SERIES HC26, FEM. SHELL STANDARD 9	3
1	1	FEMALE SHELL	COPPER ALLOY	SILVER PLATED	SERIES HC26, 4 POS. 22 DF	2
1	1	FEMALE INSERT ASS'Y	PBT-GF10	GREY	SERIES HC26, 4 POS. 22 DF	1

PARTS LIST (PER ONE UNIT)

DIESE ZEICHNUNG IST EIN KONTROLLIERTES DOKUMENT.
BEMASSUNGEN UND TOLERANZEN GEMAESS GPS (ISO STANDARDS).

TOLERANCING ISO 8015
TOLERIERUNG ISO 8015

THIS DRAWING IS A CONTROLLED DOCUMENT.
DIMENSIONING AND TOLERANCING PER GPS (ISO STANDARDS).

DWN H.BRAUN 19OCT2007
CHK T.VETTER 27OCT2008
APVD T.SCHNURPFEIL 27OCT2008

TE Connectivity

DIMENSIONS: MASSEINHEITEN: mm

TOLERANCES UNLESS OTHERWISE SPECIFIED: ALLGEMEINTOLERANZEN
0 PLC ±-
1 PLC ±-
2 PLC ±-
3 PLC ±-
4 PLC ±-
ANGLES/WINKEL ±-

PRODUCT SPEC PRODUKTSPEZ. 108-94485
APPLICATION SPEC VERARBEITUNGSSPEZ. 114-94369

NAME
FEMALE INSERT ASS'Y
SERIES HC26, 4-POS., 22DF
CIRCULAR HYBRID CONNECTOR

MATERIAL –
FINISH/OBERFLAECHE/FARBE –
WEIGHT GEWICHT –

SIZE A3 | CAGE CODE 00779 | DRAWING NO ZEICHNUNGS-NR. C-1103427 | RESTRICTED TO NUR FUER –

CUSTOMER DRAWING /KUNDENZEICHNUNG | SCALE MASSSTAB 2:1 | SHEET BLATT 1 OF VON 1 | REV F3

1470-19 (3/11)