PRESS-TO-TEST INDICATORS

MEET OR EXCEED REQUIREMENTS OF
MIL–L–7961B and MIL–L–3661
QPL APPROVAL: The products indicated have received Department of Defense certification and are listed as QPL approved.

PROVIDE POSITIVE SAFETY FACTORS

Positive safety factors are provided by patented built-in Press-To-Test indicators. Lamps can be checked instantly without removing them from their assembly.

A slight pressure on the lens holder of the assembly breaks the normal circuit and makes a test circuit, informing the operator as follows:

1. If the lamp LIGHTS when pressed in, it is proven satisfactory.
2. If the lamp FAILS TO LIGHT when pressed in, it is defective and must be replaced from the front of the panel.

Release of finger pressure restores the lens holder to operating position.

Press-To-Switch (4 terminal assemblies) are available with all indicators in this catalog. They are useful for remote control applications, as they permit closing the circuit to any local or remote device.

Typical Press-To-Test (3 terminal) and Press-To-Switch (4 terminal) circuit drawings are illustrated below.

Sub-Miniature, Miniature and **Large** Press-To-Test Indicators are available for mounting in 15/32", 5/8" and 1" clearance holes respectively. Only typical incandescent assemblies are listed in this catalog. Data on other Press-To-Test assemblies will be furnished on request.

Hot-stamped or engraved legends can be supplied on flat lenses only. Additional information will be furnished on request.

Typical 3 Terminal Press-To-Test Circuit

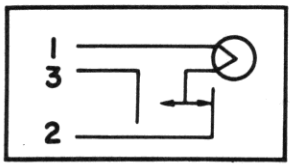

Typical 4 Terminal Press-To-Switch Circuit

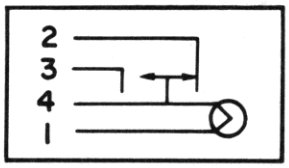

PATENTED SHUTTER DIMMING ACTION

Shutters open
Maximum full direct light beam

Shutters adjusted
Adjustable direct light beam

Shutters closed
Minimum indirect "halo" light

The patented shutter-dimming device is available on most Press-To-Test indicators. By turning the knurled cap, the individual operator can regulate the brilliancy of the light from the indicator to suit his needs under varying light conditions.

Standard dimmer action is clockwise. Assemblies with counter-clockwise dimming action are available on special order.

LENS COLORS

1–Red	5–White translucent
2–Green	6–Light yellow
3–Yellow (amber)	7–Clear colorless
4–Blue	

The digit before the last dash in the part number designates the lens color. When color other than RED is desired, change this digit to a figure noted above. Example: 812-1030-0972-506 (green)

Dialight reserves the right to make changes at anytime in order to improve design and to supply the best product possible.

Sub-Miniature Incandescent PRESS-TO-TEST Indicators

MILITARY STANDARD DRAWING MS25041 – 1 to 11

For back of panel mounting in 15/32" clearance hole
Meet or exceed requirements of MIL–L–7961B and MIL–L–3661

T-1¾ bulb with midget flange base.

See lamp ratings on page J.

800 SERIES
801 SERIES
808 SERIES
809 SERIES

MATERIALS AND FINISHES

- **Mounting Bushing and Lens Holder:** Aluminum, black anodize finish.
- **Mounting and Flange Nuts:** Aluminum, black anodize finish.
- **Internal-tooth Lockwasher:** Phosphor bronze, white nickel finish.
- **Terminals:** Brass, hot tinned with elongated slot.

Lens cap assembly marking: "Dim" with an **arrow** is die-stamped and filled on all Dimmer lens cap assemblies. **"Press-To-Test"** marking is die-stamped and filled on all lens cap assemblies used with 3 terminal units only.

BASE PART NUMBERS

Cap type	Transparent lens color	CAP PART NUMBERS for use with	
		3 terminal assemblies	4 terminal assemblies
mechanical shutter semi-blackout dimming 801 series 809 series	Clear (Colorless)	801-0337-500	809-0337-500
	Red	801-0331-500	809-0331-500
	Green	801-0332-500	809-0332-500
	Yellow (Amber)	801-0333-500	809-0333-500
	Blue	801-0334-500	809-0334-500
non-dimming 800 series 808 series	Clear (Colorless)	800-0337-500	808-0337-500
	Red	800-0331-500	808-0331-500
	Green	800-0332-500	808-0332-500
	Yellow (Amber)	800-0333-500	808-0333-500
	Blue	800-0334-500	808-0334-500

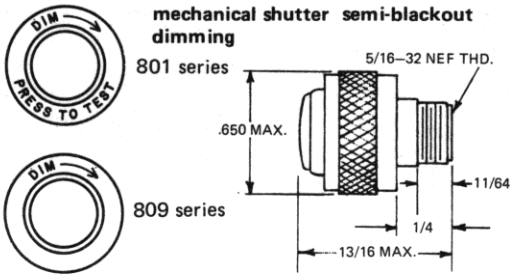

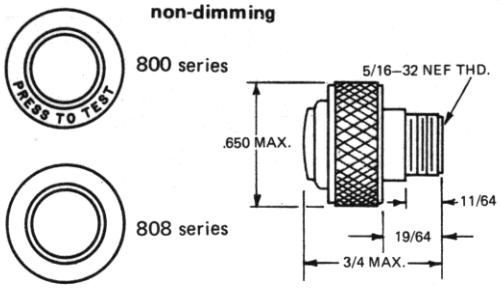

801-1030-0331-504
Dimming

800-1030-0331-504
Non-Dimming

QPL LISTED

3 Terminal Press-To-Test Assemblies

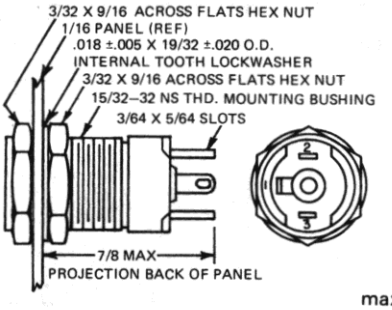

max. panel thickness 5/16"

800-1030-03-504

4 Terminal Press-To-Switch Assemblies

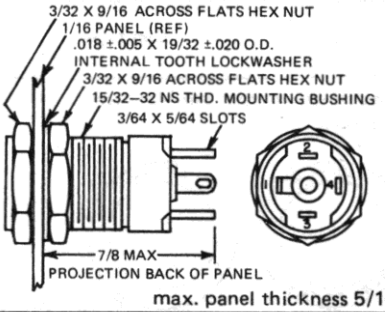

max. panel thickness 5/16"

808-1130-03-504

COMPLETE ASSEMBLY PART NUMBERS

Part number	MS number	Part number
801-1030-0337-504	MS25041-1	809-1130-0337-504
801-1030-0331-504	MS25041-2	809-1130-0331-504
801-1030-0332-504	MS25041-3	809-1130-0332-504
801-1030-0333-504	MS25041-4	809-1130-0333-504
801-1030-0334-504	MS25041-10	809-1130-0334-504
800-1030-0337-504	MS25041-5	808-1130-0337-504
800-1030-0331-504	MS25041-6	808-1130-0331-504
800-1030-0332-504	MS25041-7	808-1130-0332-504
800-1030-0333-504	MS25041-8	808-1130-0333-504
800-1030-0334-504	MS25041-11	808-1130-0334-504

Part numbers shown in gray are normally in inventory at your Dialight Distributor.

Order complete with lamp to be assured of receiving the indicator light and correct lamp together for immediate use.