L4T Four Terminal High Precision Current Sense Resistor

Available in two sizes ARCOL's. Four Terminal High Precision Current Sense Resistor offers High Power in a small package utilising advanced thick film technology.

Applications

- Power Management Applications
- Switching Power Supply
- Over current Protection
- Portable Devices

Characteristics

Item	Requirement	Test Method
TCR	As Spec	+25/-55/+25/+125/25°C
Short Time Overload	±(0.5%+0.0005Ω)	RCWV*2.5 or Max. Overload voltage whichever is lower for 5 seconds
Insulation Resistance	>1000MΩ	Apply 100Vdc for 1 minute
Endurance	±(0.5%+0.0005Ω)	70±2°,RCWV for 1000hrs with 1.5 hrs ON and 0.5hrs OFF
Damp Heat with Load	±(0.5%+0.0005Ω)	40±2°,90~95% R.H. RCWV for 1000 hrs with 1.5 hrs ON and 0.5 hrs OFF
Bending Strength	±(0.5%+0.0005Ω)	Bending amplitude 3mm for 10 seconds
Solderability		245±5°C for 3 seconds
Dielectric Withstand Voltage		Apply Max. Overload Voltage for 1 minute
Resistance to Soldering Heat	±(0.5%+0.0005Ω)	260±5°C for 10seconds
Rapid change of temperature	±(0.5%+0.0005Ω)	-55°C ~ 155°C, 5 cycles

RCWV(Rated continuous working voltage)= √(P*R)or Max. Operating voltage whichever is lower.

•Reference Standards: MIL-STD-202, JIS-C 5201

•Storage Temperature: 15 ~ 28°C; Humidity <80% RH

Schematic Diagram

- V = Voltage Terminal
- I = Current Terminal

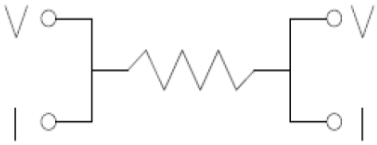

ARCOL UK Limited,
Threemilestone Ind. Estate,
Truro, Cornwall, TR4 9LG, UK.
T +44 (0) 1872 277431
F +44 (0) 1872 222002
E sales@arcolresistors.com

www.arcolresistors.com

The information contained herein does not form part of a contract and is subject to change without notice. ARCOL operate a policy of continual product development, therefore, specifications may change.

It is the responsibility of the customer to ensure that the component selected from our range is suitable for the intended application. If in doubt please ask ARCOL.

4LT Four Terminal High Precision Current Sense Resistor

Construction

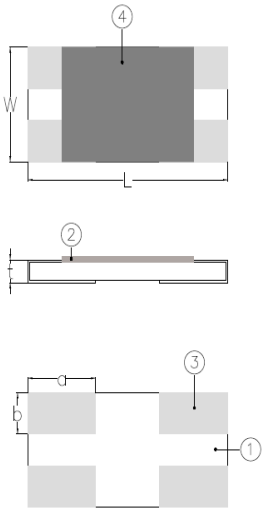

1	Alumina Substrate	4	Protection Coat
2	Resistor Layer	5	Barrier Layer
3	Electrode		

Dimensions(mm)

Type	Size (Inch)	L	W	T	a	b	Weight (g) (1000 pcs)
L4T12	1206	3.0±0.2	1,6±0.2	0.5±0.15	1.0±0.2	0.55±0.2	10
L4T20	2010	5.0±0.2	2.5±0.2	0.5±0.15	1.7±0.2	0.9±0.2	29

Item / Type	Power Rating at 70°C	Operating Temp Range	Resistance Range (mΩ)				TCR(PPM/°C)
			±0.5%	±1%	±2%	±5%	
L4T12 (1206)	1/2W	-55 ~ + 155°C	10 - 20				±50 (E) ±75 (F)
L4T20 (2010)	3/4W	-55 ~ + 155°C	10 - 20				±50 (E) ±75 (F)

Operating Voltage =√(P*R) or Max operating voltage listed above, whichever is lower.
Overload Voltage= 2.5√(P*R) or Max overload voltage listed above, whichever is lower.

ARCOL UK Limited,
Threemilestone Ind. Estate,
Truro, Cornwall, TR4 9LG, UK.
T +44 (0) 1872 277431
F +44 (0) 1872 222002
E sales@arcolresistors.com

www.arcolresistors.com

The information contained herein does not form part of a contract and is subject to change without notice. ARCOL operate a policy of continual product development, therefore, specifications may change.

It is the responsibility of the customer to ensure that the component selected from our range is suitable for the intended application. If in doubt please ask ARCOL.

4LT Four Terminal High Precision Current Sense Resistor

Reflow Soldering Profile

IR Reflow Soldering

Time of IR reflow soldering at maximum temperature point 260°C:10s

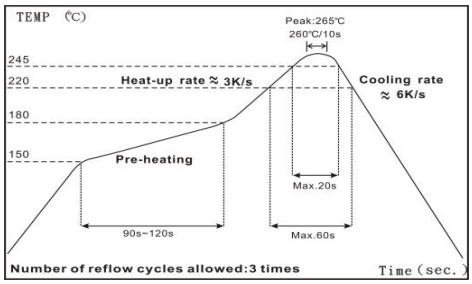

Packing Quantity & Reel Specifications(mm)

Type	øA	øB	øC	W	T	Paper Tape (EA)	Emboss Plastic Tape (EA)
L4T12	178.0±1.0	60.0+1.0	13.5±0.7	9.5±1.0	11.5±1.0	5,000	
L4T20	178.0±1.0	60.0+1.0	13.5±0.7	13.5±1.0	15.5±1.0		4,000

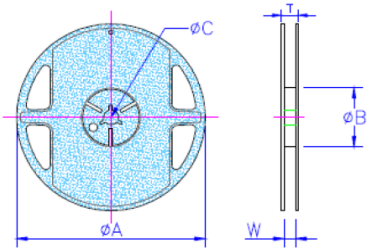

Paper Tape Specifications(mm)

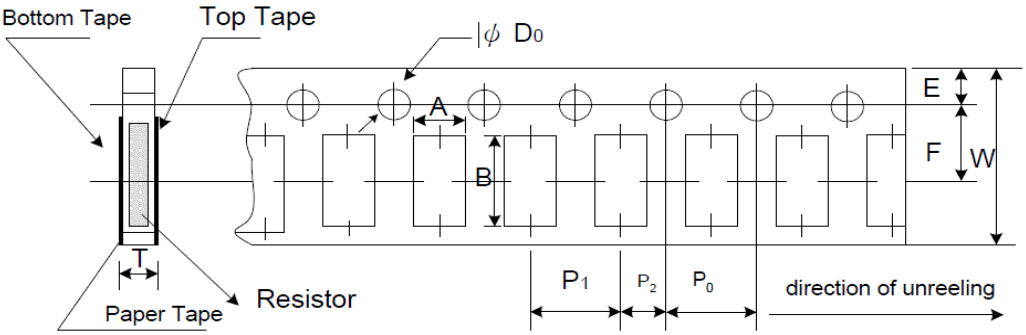

Type	A	B	W	E	F	P0	P1	P2	øD0	T
L4T12	2.00±0.05	3.55±0.05	8.00±0.10	1.75±0.05	3.5±0.05	4.00±0.10	4.00±0.10	2.00±0.05	1.55±0.05	0.75±0.05

-Peel force of top cover tape

-The peel speed shall be about 300mm/min±5%

-The peel force of top cover tape shall be between 8gf to 80gf

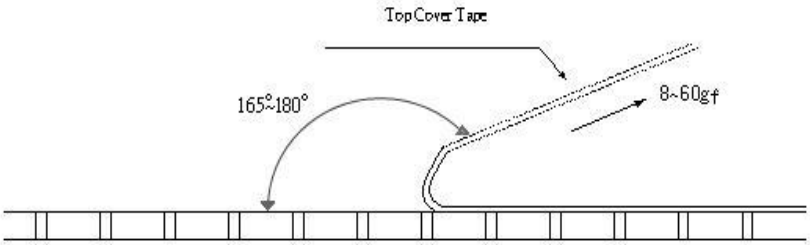

ARCOL UK Limited,
Threemilestone Ind. Estate,
Truro, Cornwall, TR4 9LG, UK.
T +44 (0) 1872 277431
F +44 (0) 1872 222002
E sales@arcolresistors.com

www.arcolresistors.com

The information contained herein does not form part of a contract and is subject to change without notice. ARCOL operate a policy of continual product development, therefore, specifications may change.

It is the responsibility of the customer to ensure that the component selected from our range is suitable for the intended application. If in doubt please ask ARCOL.

4LT Four Terminal High Precision Current Sense Resistor

Emboss Plastic Tape Specifications(mm)

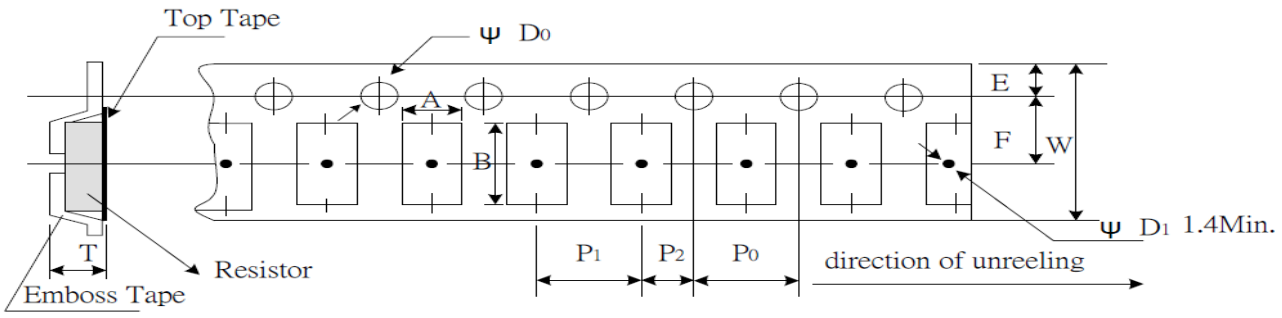

Type	A	B	W	E	F	P0	P1	P2	øD0	T
L4T20	2.85±0.10	5.45±0.10	12.0±0.10	1.75±0.05	5.5±0.05	4.00±0.05	4.00±0.10	2.00±0.05	1.50±0.10	1.00±0.20

-Peel force of top cover tape
-The peel speed shall be about 300mm/min±5%
-The peel force of top cover tape shall be between
20gf to 80gf

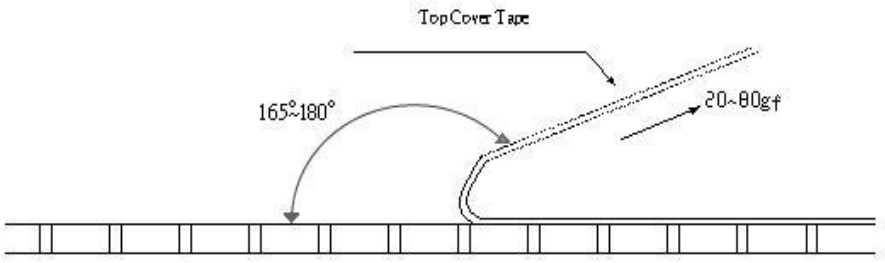

Recommended Pad layout(mm)

Type	L	W	A	B
L4T12	1.75	1.10	1.00	0.30
L4T20	2.55	1.55	1.40	0.50

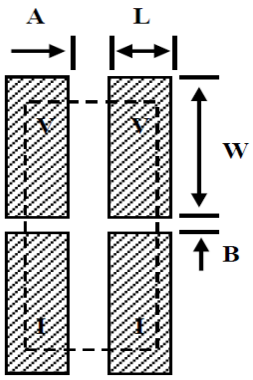

ARCOL UK Limited,
Threemilestone Ind. Estate,
Truro, Cornwall, TR4 9LG, UK.
T +44 (0) 1872 277431
F +44 (0) 1872 222002
E sales@arcolresistors.com

www.arcolresistors.com

The information contained herein does not form part of a contract and is subject to change without notice. ARCOL operate a policy of continual product development, therefore, specifications may change.

It is the responsibility of the customer to ensure that the component selected from our range is suitable for the intended application. If in doubt please ask ARCOL.

Ordering Procedure

Standard Resistor: Series(L4T12/L4T20), TCR (50PPM (E), 75PPM (F)), Resistance Value(10mΩ - 20mΩ), Tolerance,RoHs (E),Tape(R)

Standard Part Numbers

1%	0.5%
L4T12FR010FER	L4T12FR010DER
L4T12FR015FER	L4T12FR015DER
L4T12FR020FER	L4T12FR020DER
L4T20FR010FER	L4T20FR010DER
L4T20FR015FER	L4T20FR015DER
L4T20FR020FER	L4T20FR020DER

ARCOL UK Limited,
Threemilestone Ind. Estate,
Truro, Cornwall, TR4 9LG, UK.
T +44 (0) 1872 277431
F +44 (0) 1872 222002
E sales@arcolresistors.com

www.arcolresistors.com

The information contained herein does not form part of a contract and is subject to change without notice. ARCOL operate a policy of continual product development, therefore, specifications may change.

It is the responsibility of the customer to ensure that the component selected from our range is suitable for the intended application. If in doubt please ask ARCOL.