TA Series

Power Chip
Thick Film on Alumina Substrate

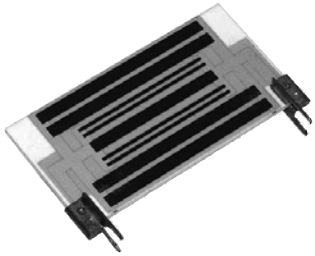

Ohmite's original Power Chip resistors feature our thick film on alumina substrate technology. These planar packages yield space saving, 10W/in^2 power densities that require over 50% less board space than other radial packages. Convection cooling is maximized by the planar package configuration which dissipates heat well above board level.

Ohmite's power chip resistors have a 125% higher operating temperature range than competitive product of similar design. High temperature solder and in-process plating keep terminations secure under self-heating effects by preventing re-flow from full power operation.

Flexible packaging schemes make these resistors ideal for power supplies, audio amplifiers, video fly-back, and other power control applications.

FEATURES

- High-Temp Terminal Construction
- Wide Resistance Range
- Low Inductance (50nH-100nH)
- High Power Density
- Easy to install. PC-mountable

SERIES SPECIFICATIONS

Series	Wattage	Series	Wattage	Series	Wattage	Series	Wattage	Series	Wattage
TA203	3.0	TA205	5.0	TA207	7.5	TA310	10.0	TA025	25.0
TA303	3.0	TA305	5.0	TA307	7.5	TA810	10.0	TA050	50.0
		TA605	5.0					TA100	100.0
		TA805	5.0						

CHARACTERISTICS

Substrate	Alumina
Resistor	Thick Film
Coating	Glass
Terminals	Solder Plated Phosphor Bronze
Temperature Coefficient	1 ohm: 450 ppm/°C 1 to 100Ω: 100 ppm/°C 101Ω and up: 50 ppm/°C
Tolerance	±1%, ±5% and ±10%
Power Rating	Based on 25°C free air
Resistance Range	0.25 ohm to 10M ohm. Consult factory for other values
Maximum Operating Voltage	350 VAC, 500 VDC through glass, 1000 VAC, 1500 VDC through substrate, not to exceed power rating
Overload	Five times rated power, as long as the one second average dissipation does not exceed the wattage rating. ΔR: ±2%, 2000 hours
Derating	100% @ 25°C to 0% @ 180°C ambient.
Equivalent Parallel Capacitance	1.0pf (100 MHz)
Withstanding Voltage	5000V thru back side
Operating Temperature Range	-55°C to +180°C
Overload Current	20 x rated current up to 8 ms (ΔR ± 0.5%)

Test	Test Condition MILR83401	Specification
Life (Rated Power)	40°C, rated power, 90 min ON 30 min OFF, 1000 hrs.	ΔR ±(1.0% + 0.05Ω)
Life (Moisture Load)	60°C, 90 - 95% RH, rated power, 90 min ON 30 min OFF, 1000 hrs.	ΔR ±(1.0% + 0.05Ω)
Temperature Cycling	Room temp > -55°C 30 min > RT 10 min ± 120°C 30 min > RT10 min 5 cycles	ΔR ±(0.25% + 0.05Ω)
Flammability	UL94V-O rated (not recognized)	
Soldering Heat	350°C Solderpot, 3 secs.	ΔR ±(0.25% + 0.05Ω)
Insulation Resistance	DC 100V, 1 min	Over 1000M ohm

(continued)

rev 6/18-1

TA Series

Power Chip
Thick Film on Alumina Substrate

DIMENSIONS

(±.020 in. / ±.508mm)

PA
3, 5, 7.5
& 10 watt

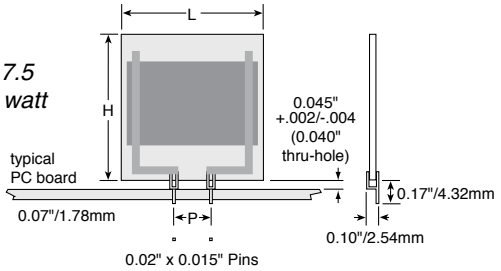

PW
10, 25, 50
& 100 watt

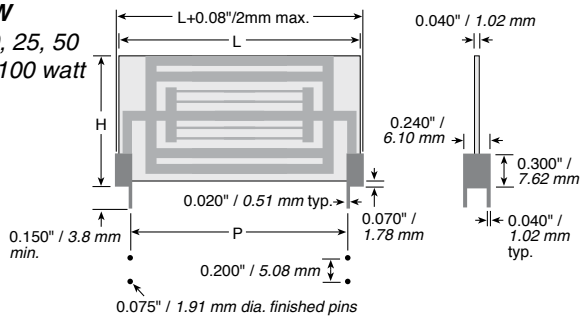

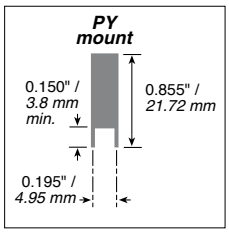

Series	Wattage	P	Length L	Height H
TA203PA	3.0	0.200 / 5.08	0.50 / 12.70	0.60 / 15.24
TA303PA	3.0	0.300 / 7.62	0.50 / 12.70	0.60 / 15.24
TA205PA	5.0	0.200 / 5.08	0.50 / 12.70	1.00 / 25.40
TA305PA	5.0	0.300 / 7.62	0.50 / 12.70	1.00 / 25.40
TA605PA	5.0	0.600 / 15.24	1.00 / 25.40	0.50 / 12.70
TA805PA	5.0	0.800 / 20.32	1.00 / 25.40	0.50 / 12.70
TA207PA	7.5	0.200 / 5.08	0.75 / 19.05	1.00 / 25.40
TA307PA	7.5	0.300 / 7.62	0.75 / 19.05	1.00 / 25.40
TA310PA	10.0	0.300 / 7.62	1.00 / 25.40	1.00 / 25.40
TA310PW*	10.0	0.300 / 7.62	1.085 / 27.56	1.00 / 25.40
TA810PA	10.0	0.800 / 20.32	1.00 / 25.40	1.00 / 25.40
TA810PW*	10.0	0.800 / 20.32	1.085 / 27.56	1.00 / 25.40
TA025PA	25.0	1.90 / 48.3	2.220 / 56.39	1.170 / 29.70
TA025PY*	25.0	1.90 / 48.3	2.220 / 56.39	1.170 / 29.70
TA050PA	50.0	1.90 / 48.3	2.220 / 56.39	2.270 / 57.60
TA050PY*	50.0	1.90 / 48.3	2.220 / 56.39	2.270 / 57.60
TA100PA	100.0	4.10 / 104.1	4.420 / 112.27	2.270 / 57.60
TA100PY*	100.0	4.10 / 104.1	4.420 / 112.27	2.270 / 57.60

*10-100 watts available in PW,PA, and PY packages.

ORDERING INFORMATION

Pin spacing
(on 3-10W models only)
2 = .2"
3 = .3"
8 = .8"

Tolerance
K = 10%
J = 5%
F = 1%

RoHS compliant

T A 3 0 5 P A 4 K 5 0 J E

Series

Power Rating:
03 = 3 W
05 = 5
07 = 7.5
10 = 10
025 = 25
050 = 50
100 = 100

Package:
PA = pin terminals, std. for 3-10 W
PW = wraparound, std. for 10-100 W
PY = high-stability wraparound

Resistance Value (Ω)
R250 = 0.25
10R0 = 10.0
2K00 = 2,000
45K0 = 45,000

Standard part numbers for TA series

Ohmic value	Part No. Prefix ➤ Suffix ▼	TA203PA	TA303PA	TA205PA	TA305PA	TA207PA	TA310PA	TA810PW	TA025PW	TA050PW	TA100PW
0.25	R250J	+	✔	✔	✔						
1.00	1R00J	+	+	+	✔	✔	+	+	+	+	+
1.50	1R50J	✔	✔	✔	✔	✔	+	✔	✔	✔	✔
2.00	2R00J	+	✔	+	✔	✔	+	✔	✔	✔	✔
4.70	4R70J	✔	✔	+	+	✔	✔	✔	✔	✔	✔
5.00	5R00J	+	✔	✔	✔	✔	✔	+	+	+	+
5.10	5R10J	✔	✔	✔	✔	+	✔	✔	✔	✔	✔
7.50	7R50J	✔	✔	✔	✔	✔	+	✔	✔	✔	✔
8.20	8R20J	✔	✔	✔	+	✔	✔	✔	✔	✔	✔
10.00	10R0J	+	+	+	+	+	+	+	+	+	+
11.00	11R0J	✔	✔	+	✔	✔	✔	✔	✔	✔	✔
12.00	12R0J	+	✔	✔	✔	✔	✔	✔	✔	✔	✔
15.00	15R0J	+	✔	✔	+	✔	✔	✔	✔	✔	✔
20.00	20R0J	+	✔	+	+	+	+	✔	✔	✔	✔
24.00	24R0J	✔	✔	✔	+	✔	✔	✔	✔	✔	✔
27.00	27R0J	+	✔	✔	✔	✔	+	✔	✔	✔	✔
33.00	33R0J	✔	✔	✔	✔	+	✔	✔	✔	✔	✔
47.00	47R0J	+	✔	+	✔	✔	✔	✔	✔	✔	✔

Ohmic value	Part No. Prefix ➤ Suffix ▼	TA203PA	TA303PA	TA205PA	TA305PA	TA207PA	TA310PA	TA810PW	TA025PW	TA050PW	TA100PW
50.00	50R0J	+	+	+	+	✔	✔	+	+	+	+
62.00	62R0J	✔	✔	✔	+	✔	✔	✔	✔	✔	✔
68.00	68R0J	✔	✔	+	✔	✔	+	✔	✔	✔	✔
75.00	75R0J	✔	✔	✔	+	✔	✔	✔	✔	✔	✔
100.00	100RJ	+	✔	+	+	✔	+	+	+	+	+
150.00	150RJ	✔	✔	+	✔	✔	✔	✔	✔	✔	✔
200.00	200RJ	+	+	+	+	+	✔	✔	✔	✔	✔
250.00	250RJ	✔	✔	✔	+	✔	✔	✔	✔	✔	✔
270.00	270RJ	✔	✔	+	✔	✔	+	✔	✔	✔	✔
300.00	300RJ	+	✔	+	✔	✔	✔	✔	✔	✔	✔
470.00	470RJ	+	✔	+	✔	+	+	✔	✔	✔	✔
500.00	560	+	✔	+	✔	✔	✔	+	+	+	+
620.00	620RJ	✔	✔	✔	+	✔	✔	✔	✔	✔	✔
680.00	680RJ	✔	✔	+	✔	✔	✔	✔	✔	✔	✔
1,000.00	1K00J	+	✔	+	✔	✔	+	+	+	+	+
1,500.00	1K50J	✔	✔	+	+	✔	+	✔	✔	✔	✔
1,800.00	1K80J	✔	✔	+	✔	✔	✔	✔	✔	✔	✔
2,000.00	2K00J	+	✔	✔	+	✔	✔	✔	✔	✔	✔

Ohmic value	Part No. Prefix ➤ Suffix ▼	TA203PA	TA303PA	TA205PA	TA305PA	TA207PA	TA310PA	TA810PW	TA025PW	TA050PW	TA100PW
2,500.00	2K50J	✔	✔	+	✔	✔	✔	✔	✔	✔	✔
3,000.00	3K00J	✔	✔	+	✔	✔	+	✔	✔	✔	✔
4,000.00	4K00J	✔	✔	✔	+	✔	✔	✔	✔	✔	✔
4,700.00	4K70J	✔	✔	+	+	+	✔	✔	✔	✔	✔
5,000.00	5K00J	✔	✔	✔	+	✔	✔	✔	✔	✔	✔
5,100.00	5K10J	✔	✔	+	✔	✔	+	✔	✔	✔	✔
7,500.00	7K50J	✔	✔	+	✔	✔	+	✔	✔	✔	✔
10,000.00	10K0J	+	✔	+	+	+	+	+	+	✔	✔
15,000.00	15K0J	✔	✔	✔	+	✔	✔	✔	✔	✔	✔
18,000.00	18K0J	✔	+	✔	+	✔	✔	✔	✔	✔	✔
20,000.00	20K0J	✔	✔	+	✔	+	+	✔	✔	✔	✔
30,000.00	30K0J	✔	✔	+	✔	✔	✔	✔	✔	✔	✔
39,000.00	39K0J	✔	✔	✔	+	✔	✔	✔	✔	✔	✔
50,000.00	50K0J	✔	✔	✔	+	✔	✔	✔	✔	✔	✔
75,000.00	–75K0J	✔	✔	+	✔	✔	✔	✔	✔	✔	✔
100,000	100KJ	+	+	+	✔	✔	✔	✔	✔	✔	✔
150,000	150KJ	+	✔	✔	✔	✔	✔	✔	✔	✔	✔
200,000	200KJ	✔	+	✔	✔	✔	✔	✔	✔	✔	✔

+ = Most popular standard values, ✔ = Stock values