REV.	ECN NO.	DATE	SIGN	DESCRIPTION
B	LEN-0C0103	2010/11/23	IVNA	Change 前導角 View
C	LEN1741186	2017/04/11	Ruru	Change Logo
D	C200306	2020/03/19	JC Chen	△D X1

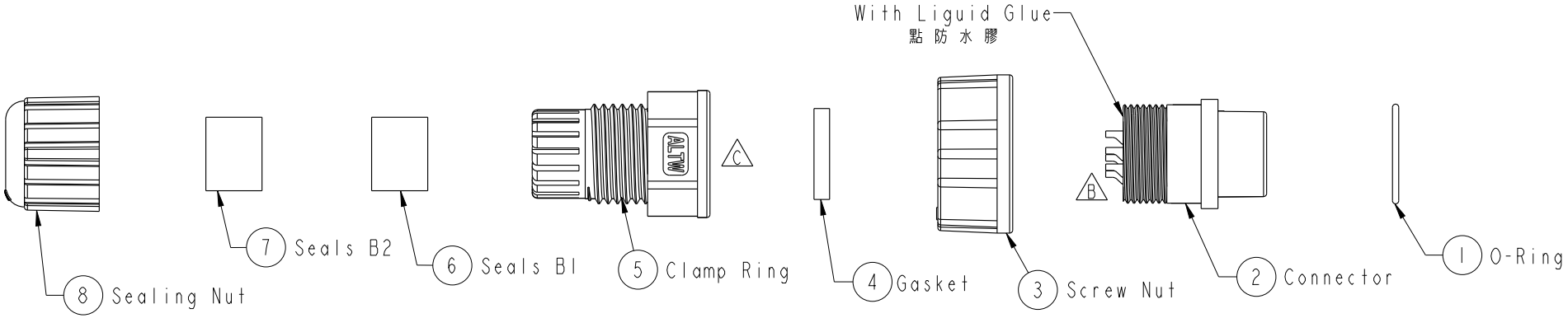

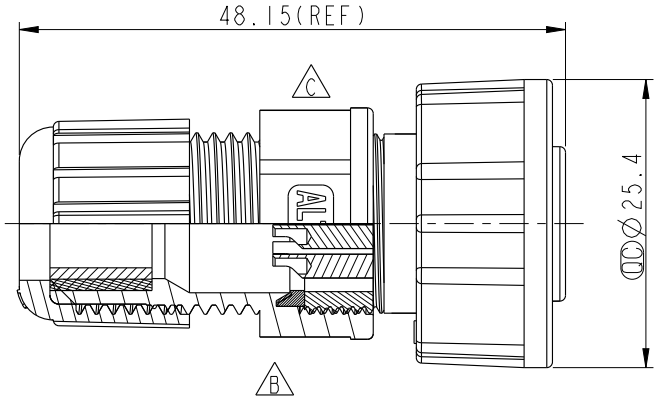

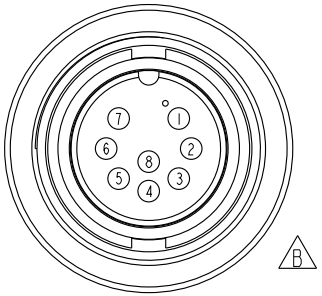

Pin Assignments
Front View前視圖

Note:
* QC Important Dimension To Check.
* Waterproof Rate: IP67
* Housing: Nylon+GF, Black.
* Female Pin: Copper Alloy, Gold Plated.
* O-Ring: EPDM, Black.
* △D Screw Nut: Nylon+GF, Black.
* △B Gasket: Silicone, Black
* Seals: EPDM, Black
* Clamp Ring: Nylon, Black.
* Sealing Nut: Nylon, Black.
* Seals B1 for Cable OD: ∅7.6mm~∅9.6mm
* Seals B2 for Cable OD: ∅4.0mm~∅7.6mm
* One Set Unassembled in One PE Bag.

UNIT: mm

TOLERANCE
.X ±0.25
.XX ±0.1
.XXX ±0.05
ANGLES ±1°

TITLE: Middle, Assy Screw 8Pin F Conn F Pin			
SCALE 1:1	SIZE A4	SHEET 1 OF 1	
REV. D	WC-REV. A.2	QC: Inspection item	

Amphenol LTW
安費諾亮泰企業股份有限公司

ITEM NO CD-08BFFA-SL7001	DRAWN BY Ruru	DATE 2017-04-11
DWG NO CD-08BFFA-SL7001	CHECKED BY Rita	DATE 2017-04-11
CUSTOMER ALTW	APPROVED BY Max	DATE 2017-04-11

THIS DOCUMENT IS SUBJECT TO CHANGE WITHOUT NOTICE. IT IS CONFIDENTIAL AND A PROPERTY OF Amphenol LTW. DISCLOSURE TO THIRD PARTY HAS TO BE AUTHORIZED BY Amphenol LTW.