RELEASED FOR PUBLICATION
© COPYRIGHT 20 BY ALL RIGHTS RESERVED

Project NR	REVISIONS					
	P	LTR	DESCRIPTION	DATE	DWN	APVD
PRJ-14-000003352		B	Diffusion N°331170	08JUL2015	MB	MV
		C	Add item 16, 17 and 18 - Add note 15 Diffusion 321623	11APR2015	MB	MV
		D	Modify quantity 10 & 11 + uptade product spec & application spec - Diffusion 331914	20SEP2016	EL	MV

Isometric view - Scale 1:2

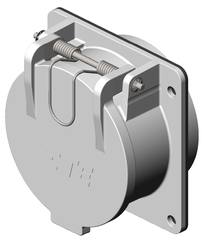

Isometric view - Scale 1:2

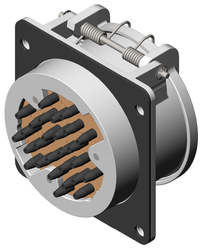

			Paper	5	1	YSPEC-408-157000-1	Mounting instruction	17
–	–	–	–	1.50	1	0206-0329AS	Deshydrating bag	17
–	–	–	Plastic	0,50	2	0158-0001-X	Collar	16
15	–	–	Carton	88.14	1	0206-0105AS	Box	15
7	Conversion Cr3	FMME 4010	Aluminium	376.47	1	YG-UC-211287A-JG07	Cover	14
–	–	–	Stainless steel	1.15	3	W-08-I	Washer	13
–	–	–	Stainless steel	17.24	3	CHCM08x25-I	Screw CHC M8x25	12
3	Silver plating	–	Brass	43.14	1 (D)	YS-UC-211946A-AA1A	Kit with 3 Male contacts 10 AWG	11
3	Silver plating	–	Brass	349.15	1 (D)	YS-UC-211945A-AA1A	Kit with 24 Male contacst AWG 12 and 14	10
–	–	FTMP 651	Polycarbonate	162.78	1	YK-UC-211275A-QK00	Male insulator	9
–	–	FMEL 31016	Neoprene	1.91	27	YK-UC-211315A-VP00	Sleeve	8
–	–	FTMP 651	Polycarbonate	124.80	1	YK-UC-211276A-QK00	Mixed insulator	7
–	–	–	Stainless Steel	0.41	2	Y0000000-7105-06-I	Self locking ring	6
–	–	FMEL 31015	Neoprene	52,3	1	YA-UC-211297A-VN00	Gasket	5
–	–	FMEL 31016	Neoprene	13,14	1	1504-0019A4	Gasket	4
–	–	FMME 3034	Stainless steel	4,31	1	1504-0005A4	Spring	3
–	–	FMME 3017	Stainless steel	3,95	1	1504-0018A4	Axis	2
7	Conversion Cr3	FMME 4010	Aluminium	1070,35	1	YG-UC-211283A-JG07	Receptacle body - position 77,5	1
Remarks	Plating	Data sheet	Material	Weight (g)	Qty	Part number	Designation	item

1 ( ) : cotes pour information / *dimensions for information*
▭ : cotes de controle / *inspection dimensions*

2 Instructions de mise en oeuvre à appliquer par le client
Customer instructions to be applied by the customer

3 Ref. YS-UC-211946A-AA1A (item1) is a KIT with 3 contacts AWG10
Ref. YS-UC-211945A-AA1A (item1) is a KIT with 24 contacts AWG12/14

4 Receptacle gasket is sold tied on the receptacle

5

6

7 White paint

8 Work instruction according to 118-157000-1

9 Diameter of panel mounting hole : 5,86±0.005

10 Tightening torque = 10N.m

11 Laser marking :
TE + Commercial reference + Year-Week

12 Daniels manual crimping tool :
- Hand crimper HX4
- Die Y543

Daniels pneumatic crimping tool :
- Pneumatic pump HX23
- Die Y543

13 Groove made to differentiate contacts

14 Sleeves packaging separately and identified

15 A label with the commercial reference and the complete BOM is glued on the cardbox

16 Standards :
AAR S-512, APTA RP-E-019-99

17 Packaging Specification 107-157003

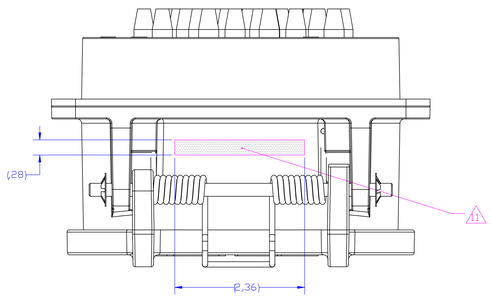

INSULATOR VIEW
SCALE 1:1

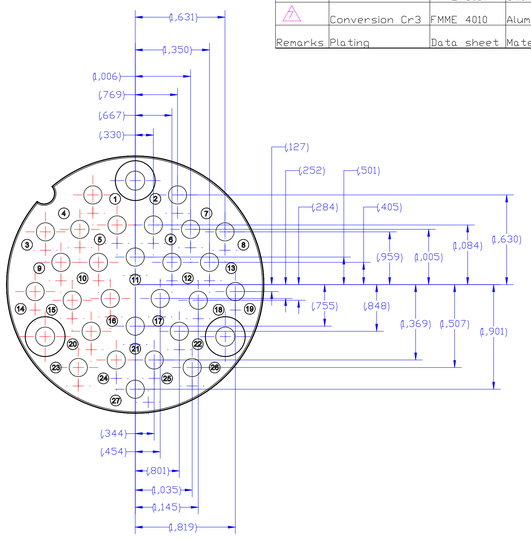

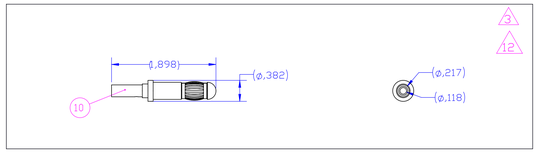

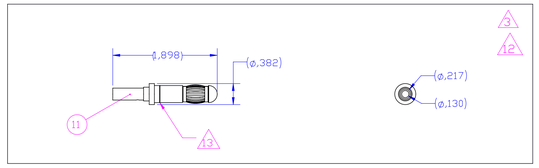

VIEW WITH COVER CLOSED

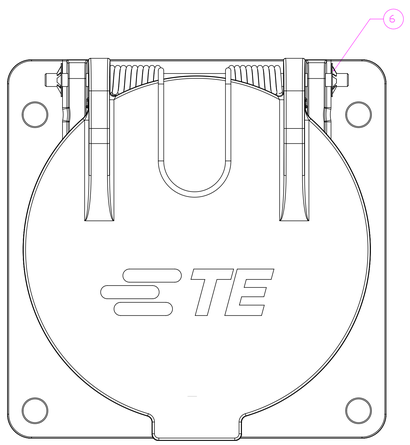

VIEW WITH COVER REMOVED

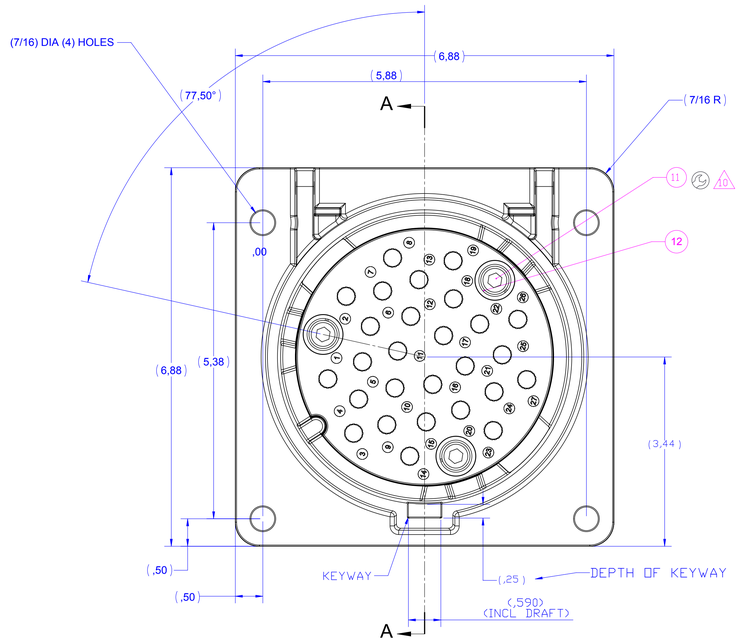

A-A VIEW

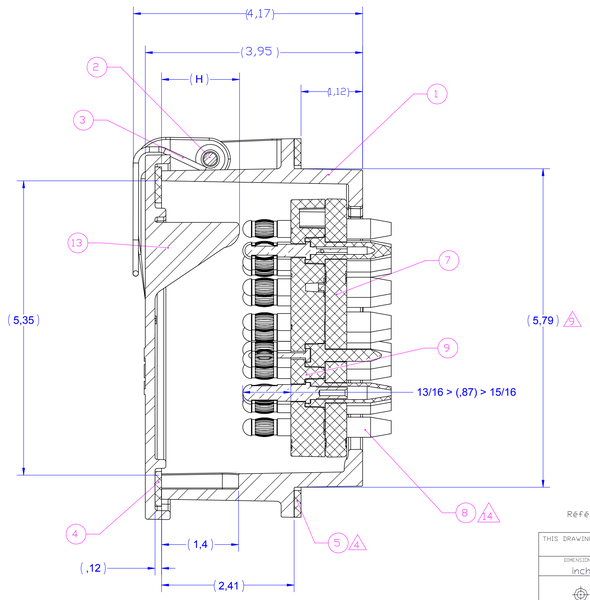

Référence commerciale / *Commercial reference* : 27P-REC-3-01

YE-UC-212085A-0000
PART NO

THIS DRAWING IS A CONTROLLED DOCUMENT.	DV M.BONNIN 08JUL2015	TE Connectivity	
DIMENSIONS: inch	CH JF GALIPAUD 08JUL2015		
TOLERANCES UNLESS OTHERWISE SPECIFIED: 0 PLC ± - ; 1 PLC ± - ; 2 PLC ± - ; 3 PLC ± - ; 4 PLC ± - ; ANGLES ± -	APP M.VIMARD 08JUL2015	NAME: RECEPTACLE TYPICAL OF AEM-7	
	PRODUCT SPEC: 108-157001 (D)		
	APPLICATION SPEC: 408-157000-1 (D)	SIZE: A0	CAGE CODE: –
MATERIAL: –	WEIGHT: 5.057 pound	DRAWING NO: C-E1894-212085	RESTRICTED TO: –
–	FINISH: –	SCALE: 1:1	SHEET 1 OF 1
CUSTOMER DRAWING			REV: D

4806 (3/13)
Solidworks DRAWING

REF - GED BE ind 9