DATA SHEET

SMP1307 Series: Very Low Distortion Attenuator Plastic Packaged PIN Diodes

Applications

- Very low distortion PI and TEE attenuators
- Cable TV AGC
- High-volume wireless systems

Features

- Low distortion design
- Frequency range from 5 MHz to > 2 GHz
- Packages rated MSL1 @ 260 °C per JEDEC J-STD-020

Skyworks Green™ products are compliant with all applicable legislation and are halogen-free. For additional information, refer to *Skyworks Definition of Green™*, document number SQ04–0074.

Description

The SMP1307 series of plastic packaged, surface mountable, low capacitance (0.3 pF) silicon PIN diodes is designed for attenuator applications from 5 MHz to beyond 2 GHz.

The thick 175 µm I region width of these PIN diodes makes them very attractive for use in very low distortion PI and TEE attenuators commonly found in TV distribution applications. The 1.5 µs carrier lifetime of these diodes results in resistance of 100 Ω maximum at 1 mA and 10 Ω maximum at 10 mA.

The SMP1307 series is available in a selection of plastic packages, as a single diode in the small footprint SOD-323 package, and in a variety of configurations in the SOT-23 package. Also available in an SOT-5 package (SMP1307-027) is a four-diode array designed for insertion in commonly used four-diode PI attenuator circuits. Table 1 describes the various packages and marking of the SMP1307 series.

Table 1. SMP1307 Series Packaging and Marking

Common Anode	Common Cathode	Series Pair	Reverse Series Pair	Single	PI
SOT-23	SOT-23	SOT-23	SOT-23	SOD-323 Green™	SOT-5
SMP1307-003LF Green™ Marking:RJ9	**SMP1307-004LF** Marking: RJ3	**SMP1307-005LF** Green™ Marking: RJ2	**SMP1307-006LF** Green™ Marking: RJ8	**SMP1307-011LF** Marking: RJ	**SMP1307-027LF** Green™ Marking: RJM
L_S = 1.5 nH	L_S = 1.5 nH	L_S = 1.5 nH	L_S = 1.5 nH	L_S = 1.5 nH	

The Pb-free symbol or "LF" in the part number denotes a lead-free, RoHS-compliant package unless otherwise noted as Green™. Tin/lead (Sn/Pb) packaging is not recommended for new designs.

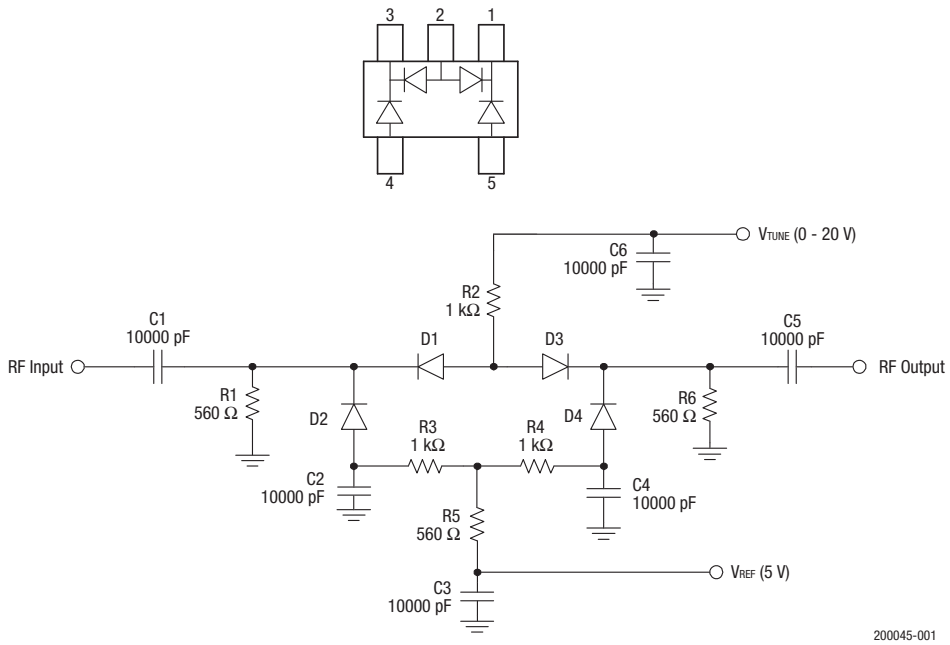

Figure 1. SMP1307-027 Block Diagram and Schematic

SMP1307-027 Four-Diode PI Attenuator

The SMP1307-027 uses four PIN diode junctions in a five-lead SOT package. It is configured for ease of insertion in the PI attenuator circuit commonly used for broadband TV distribution systems, covering a frequency range from 5 MHz to over 1 GHz.

A broadband attenuator was designed using the SMP1307-027 that shows good performance up to 2 GHz. The attenuator was evaluated with a 50 Ω source and load impedance. Figure 1 shows a block diagram and circuit diagram for this device (the typical performance of the SMP1307-027 is shown in Figure 2).

Electrical and Mechanical Specifications

The absolute maximum ratings of the SMP1307 series are provided in Table 2. Electrical specifications are provided in Table 3. Resistance versus temperature measurements are provided in Table 4.

Typical performance characteristics of the SMP1307 series are illustrated in Figures 2 to 6. Package dimensions are shown in Figures 7 to 11 (odd numbers), and tape and reel dimensions are provided in Figures 8 to 12 (even numbers).

Package and Handling Information

Instructions on the shipping container label regarding exposure to moisture after the container seal is broken must be followed. Otherwise, problems related to moisture absorption may occur when the part is subjected to high temperature during solder assembly.

The SMP1307 series is rated to Moisture Sensitivity Level 1 (MSL1) at 260 °C. It can be used for lead or lead-free soldering.

For additional information, refer to the Skyworks Application Note, *Solder Reflow Information*, document number 200164.

Care must be taken when attaching this product, whether it is done manually or in a production solder reflow environment. Production quantities of this product are shipped in a standard tape and reel format.

Table 2. SMP1307 Series Absolute Maximum Ratings[1]

Parameter	Symbol	Minimum	Maximum	Units
Reverse voltage	V_R		200	V
Power dissipation @ 25 °C lead temperature	P_D		250	mW
Storage temperature	T_{STG}	–65	+150	°C
Operating temperature	T_A	–65	+150	°C

[1] Exposure to maximum rating conditions for extended periods may reduce device reliability. There is no damage to device with only one parameter set at the limit and all other parameters set at or below their nominal value. Exceeding any of the limits listed here may result in permanent damage to the device.

***ESD HANDLING**: Although this device is designed to be as robust as possible, electrostatic discharge (ESD) can damage this device. This device must be protected at all times from ESD when handling or transporting. Static charges may easily produce potentials of several kilovolts on the human body or equipment, which can discharge without detection. Industry-standard ESD handling precautions should be used at all times.*

Table 3. SMP1307 Series Electrical Specifications[1]
(T_A = +25 °C, Unless Otherwise Noted)

Parameter	Symbol	Test Condition	Min	Typical	Max	Units
Reverse current	I_R	V_R = 200 V			10	µA
Capacitance[2]	C_T	f = 1 MHz, V = 30 V			0.3	pF
Resistance	R_S	f = 100 MHz I = 1 mA I = 10 mA I = 100 mA		 75	 100 15 3	 Ω Ω Ω
Forward voltage	V_F	I_F = 10 mA		0.85		V
Carrier lifetime	Tl	I_F = 10 mA		1.5		µs
I region width				175		µm

[1] Performance is guaranteed only under the conditions listed in this table.

[2] The SMP1307-027 maximum capacitance is 0.45 pF.

Table 4. Resistance vs Temperature @ 100 MHz

I_F (mA)	R_S @ –55 °C (Ω)	R_S @ –15 °C (Ω)	R_S @ +25 °C (Ω)	R_S @ +65 °C (Ω)	R_S @ +100 °C (Ω)
0.02	2386	2360	2546	2520	2440
0.10	560	598	632	633	639
0.3	203	219	236	239	242
1.0	66.1	71.2	79.3	83.6	85.4
10	9.1	10.0	10.9	12.2	12.9
20	5.6	6.0	6.6	7.4	7.8
100	2.2	2.4	2.6	3.0	3.2

Typical Performance Characteristics

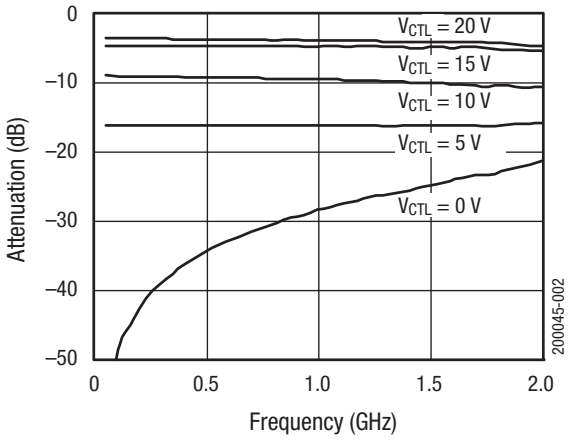

Figure 2. SMP1307-027 Attenuation vs Frequency

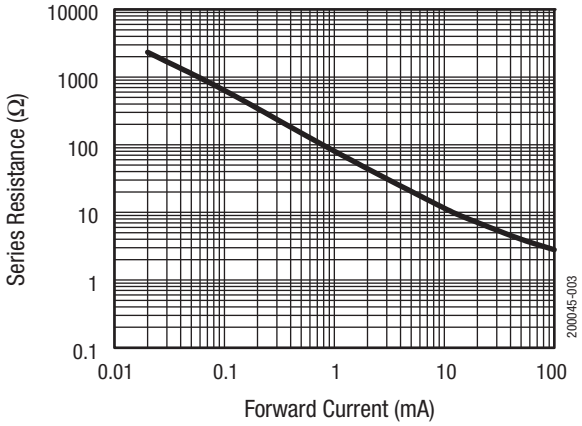

Figure 3. Series Resistance vs Current @ 100 MHz

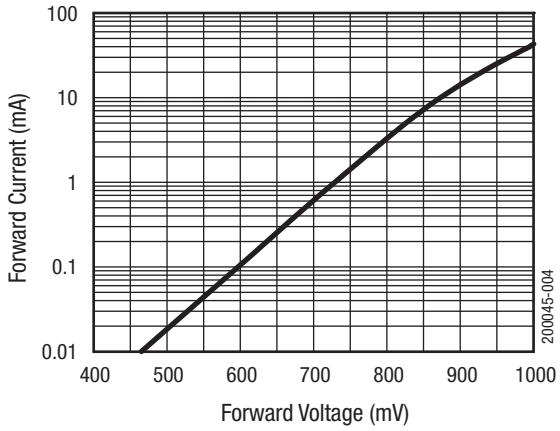

Figure 4. DC Characteristic

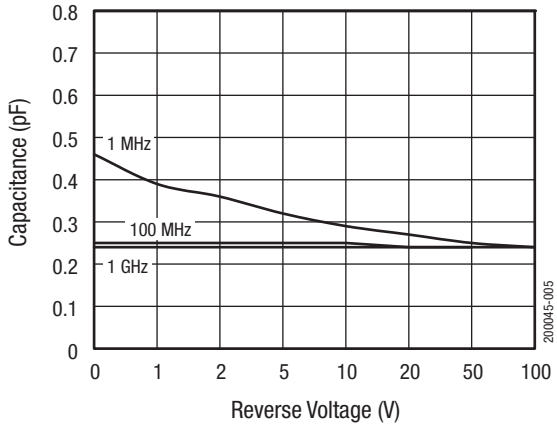

Figure 5. Capacitance vs Reverse Voltage

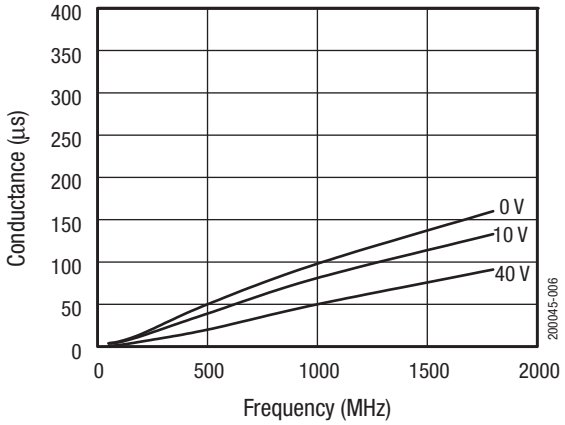

Figure 6. Conductance vs Frequency and Reverse Voltage

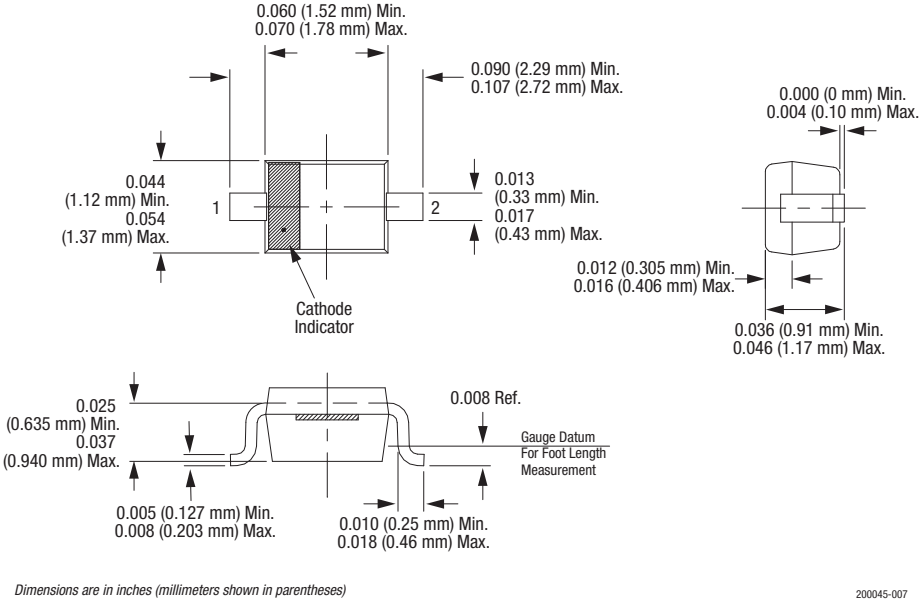

Figure 7. SOD-323 Package Dimension Drawing

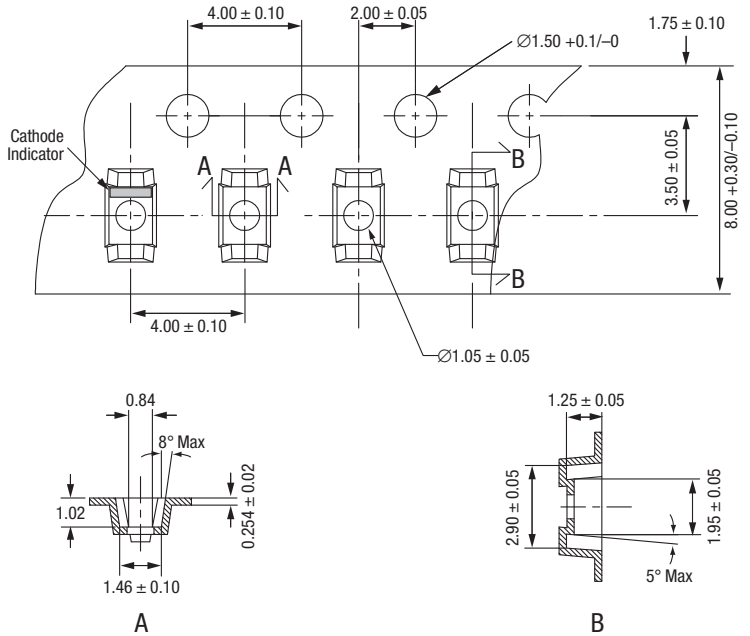

Notes:

1. *Carrier tape: black conductive polycarbonate or polystyrene.*
2. *Cover tape: transparent conductive material.*
3. *Cover tape size: 5.5 mm width.*
4. *ESD surface resistivity is ≥1 x 10^5 ~ ≤ 1 x 10^{11} Ohms/square.*
5. *10 sprocket hole pitch cumulative tolerance: ±0.20 mm.*
6. *Ao and Bo measured on plane 0.30 mm above bottom of the pocket.*
7. *All measurements are in millimeters.*
8. *Standard reel size is 7 inches. Standard reel quantity is 3000 pcs.*

200045-008

Figure 8. SOD-323 Tape and Reel Dimensions

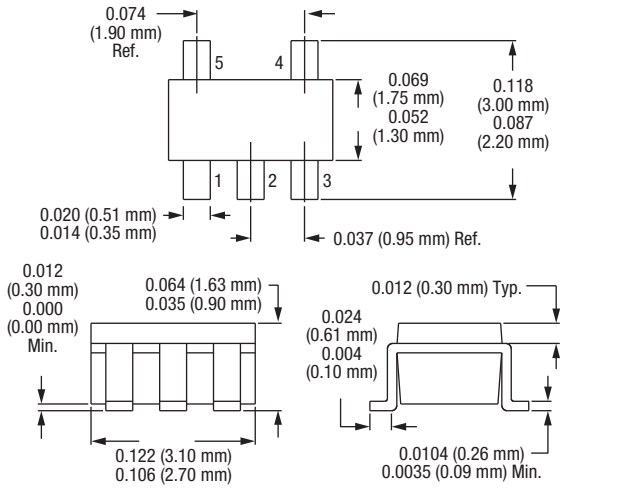

Dimensions are in inches (millimeters shown in parentheses) 200045-009

Figure 9. SOT-5 Package Dimension Drawing

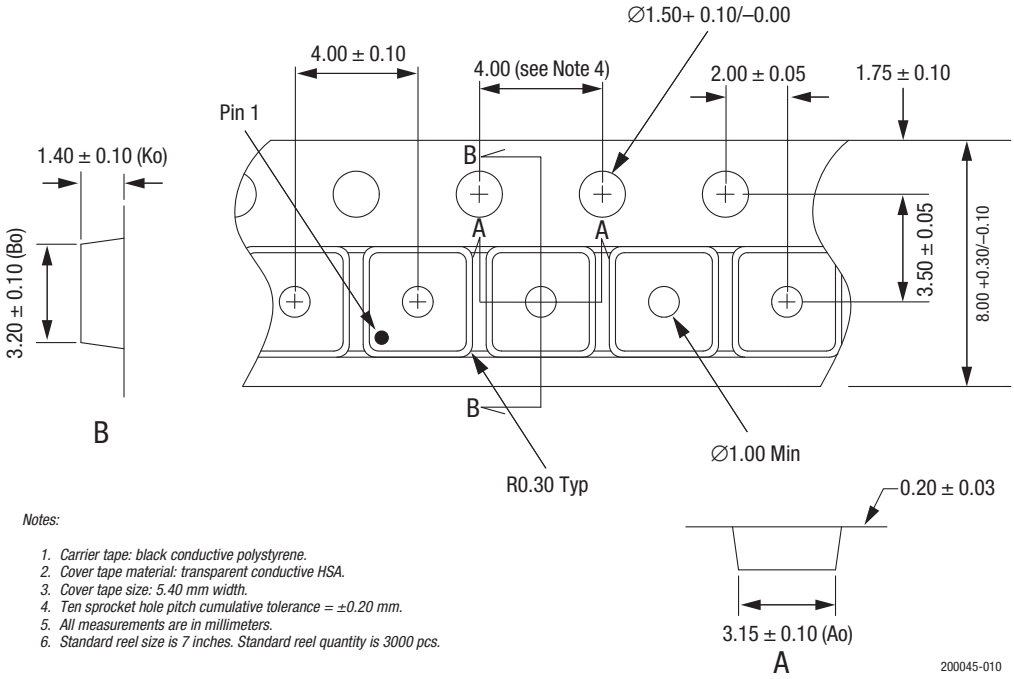

Notes:

1. *Carrier tape: black conductive polystyrene.*
2. *Cover tape material: transparent conductive HSA.*
3. *Cover tape size: 5.40 mm width.*
4. *Ten sprocket hole pitch cumulative tolerance = ±0.20 mm.*
5. *All measurements are in millimeters.*
6. *Standard reel size is 7 inches. Standard reel quantity is 3000 pcs.*

Figure 10. SOT-5 Tape and Reel Dimensions

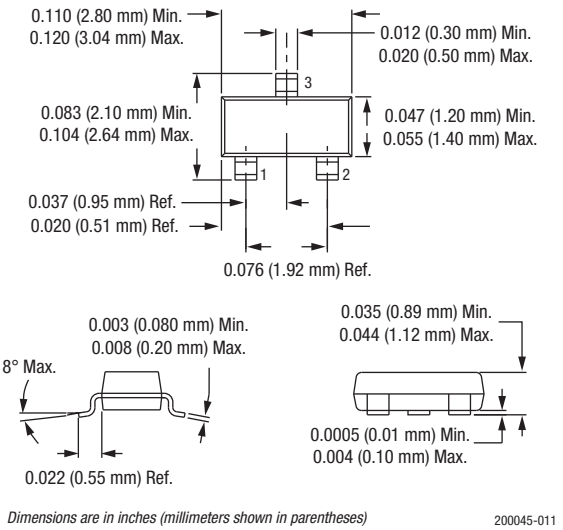

Figure 11. SOT-23 Package Dimension Drawing

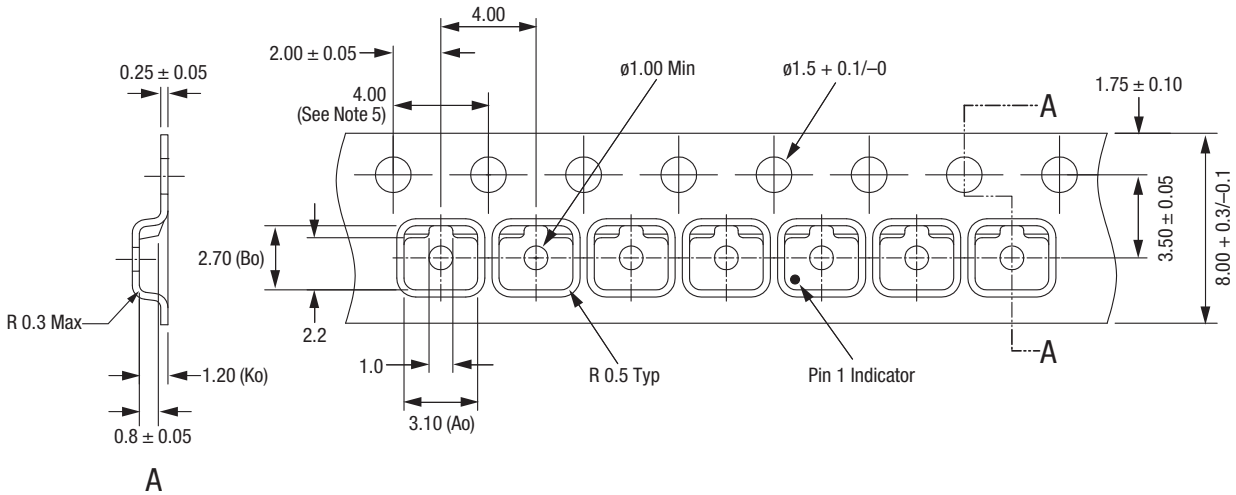

Notes:

1. *Carrier tape: black conductive polycarbonate.*
2. *Cover tape material: transparent conductive PSA.*
3. *Cover tape size: 5.40 mm width.*
4. *Tolerance ±0.10 mm.*
5. *Ten sprocket hole pitch cumulative tolerance: ±0.2 mm.*
6. *All measurements are in millimeters.*
7. *Alternative carrier tape dimensions are:*
   Ao = 3.3
   Bo = 2.9
   Ko = 1.22

200045-012

Figure 12. SOT-23 Tape and Reel Dimensions

Copyright © 2002-2007, 2009-2010, 2013-2016 Skyworks Solutions, Inc. All Rights Reserved.

Information in this document is provided in connection with Skyworks Solutions, Inc. (“Skyworks”) products or services. These materials, including the information contained herein, are provided by Skyworks as a service to its customers and may be used for informational purposes only by the customer. Skyworks assumes no responsibility for errors or omissions in these materials or the information contained herein. Skyworks may change its documentation, products, services, specifications or product descriptions at any time, without notice. Skyworks makes no commitment to update the materials or information and shall have no responsibility whatsoever for conflicts, incompatibilities, or other difficulties arising from any future changes.

No license, whether express, implied, by estoppel or otherwise, is granted to any intellectual property rights by this document. Skyworks assumes no liability for any materials, products or information provided hereunder, including the sale, distribution, reproduction or use of Skyworks products, information or materials, except as may be provided in Skyworks Terms and Conditions of Sale.

THE MATERIALS, PRODUCTS AND INFORMATION ARE PROVIDED “AS IS” WITHOUT WARRANTY OF ANY KIND, WHETHER EXPRESS, IMPLIED, STATUTORY, OR OTHERWISE, INCLUDING FITNESS FOR A PARTICULAR PURPOSE OR USE, MERCHANTABILITY, PERFORMANCE, QUALITY OR NON-INFRINGEMENT OF ANY INTELLECTUAL PROPERTY RIGHT; ALL SUCH WARRANTIES ARE HEREBY EXPRESSLY DISCLAIMED. SKYWORKS DOES NOT WARRANT THE ACCURACY OR COMPLETENESS OF THE INFORMATION, TEXT, GRAPHICS OR OTHER ITEMS CONTAINED WITHIN THESE MATERIALS. SKYWORKS SHALL NOT BE LIABLE FOR ANY DAMAGES, INCLUDING BUT NOT LIMITED TO ANY SPECIAL, INDIRECT, INCIDENTAL, STATUTORY, OR CONSEQUENTIAL DAMAGES, INCLUDING WITHOUT LIMITATION, LOST REVENUES OR LOST PROFITS THAT MAY RESULT FROM THE USE OF THE MATERIALS OR INFORMATION, WHETHER OR NOT THE RECIPIENT OF MATERIALS HAS BEEN ADVISED OF THE POSSIBILITY OF SUCH DAMAGE.

Skyworks products are not intended for use in medical, lifesaving or life-sustaining applications, or other equipment in which the failure of the Skyworks products could lead to personal injury, death, physical or environmental damage. Skyworks customers using or selling Skyworks products for use in such applications do so at their own risk and agree to fully indemnify Skyworks for any damages resulting from such improper use or sale.

Customers are responsible for their products and applications using Skyworks products, which may deviate from published specifications as a result of design defects, errors, or operation of products outside of published parameters or design specifications. Customers should include design and operating safeguards to minimize these and other risks. Skyworks assumes no liability for applications assistance, customer product design, or damage to any equipment resulting from the use of Skyworks products outside of stated published specifications or parameters.

Skyworks and the Skyworks symbol are trademarks or registered trademarks of Skyworks Solutions, Inc., in the United States and other countries. Third-party brands and names are for identification purposes only, and are the property of their respective owners. Additional information, including relevant terms and conditions, posted at www.skyworksinc.com, are incorporated by reference.