List of "SFW__R-1/2STE1LF" customer document

DOCUMENT NO.	LIST
SC-SFW10	SPEC.
JSA95854	CAT.NO.TABLE FOR 1mm SPACING SMT CONNECTOR (SFW__R-1/2ST__LF)
JSA95855	1mm SPACING SMT CONNECTOR (SFW__R-1ST__LF)
JSA95856	1mm SPACING SMT CONNECTOR (SFW__R-2ST__LF)
JSA95857	CAT.NO.TABLE FOR PLASTIC TAPE PACKAGED 1mm SPACING SMT CONNECTOR (SFW__R-1/2STE1LF)
JSA95858	PLASTIC TAPE PACKAGED 1mm SPACING SMT CONNECTOR (SFW__R-1STE1LF)
JSA95859	PLASTIC TAPE PACKAGED 1mm SPACING SMT CONNECTOR (SFW__R-2STE1LF)
JSA91605	RECOMMENDED CABLE (FPC) (SFW__R-1/2ST__)
JSA91604	RECOMMENDED CABLE (FFC) (SFW__R-1/2ST__)
GS-20-129	HANDLING PROCEDURES

FCIconnect.com

Copyright FCI.

ltr	ecn no	dr	date
A	J05-0055	H.T	'05/2/4
B	J06-0398	H.T	9/26/'06
C	J09-0358	M.Y	2009-10-5
D	J09-0380	M.Y	2009-10-27

mat'l. code –

surface 58 ISO 1302

tolerance ISO 406 ISO 1101

tolerances unless otherwise specified

angles | linear

dr M.YAMASHITA 2009-10-27

engr M.YAMASHITA 2009-10-27

chr S. Watanabe 2009-10-27

appd S. Ukedawa 2009-10-27

projection

mm

scale X

product family 58RF

CODE JP

title

1mm SPACING FPC/FFC CONNECTOR DOCUMENT LIST

(Cat. No. : SFW__R-1/2STE1LF)

dwg no JSA 96336

sheet 1 of 1

size A4

type Product Customer Drawing

sheet index | revision D | sheet 1

Rev. D

form: A4

PDM: Rev:D STATUS:Released Printed: Nov 01, 2009

CAT. NO. & DIMENSIONS

NO. OF CONTACTS (n)	CAT. NO.	DIMENSIONS (NOTE2)			
		A ± 0.2	B ± 0.2	C ± 0.2	D ± 0.1
4	SFW4R-1/2ST__LF	9.8	8.6	3.0	5.3
5	SFW5R-1/2ST__LF	10.8	9.6	4.0	6.3
6	SFW6R-1/2ST__LF	11.8	10.6	5.0	7.3
7	SFW7R-1/2ST__LF	12.8	11.6	6.0	8.3
8	SFW8R-1/2ST__LF	13.8	12.6	7.0	9.3
9	SFW9R-1/2ST__LF	14.8	13.6	8.0	10.3
10	SFW10R-1/2ST__LF	15.8	14.6	9.0	11.3
11	SFW11R-1/2ST__LF	16.8	15.6	10.0	12.3
12	SFW12R-1/2ST__LF	17.8	16.6	11.0	13.3
13	SFW13R-1/2ST__LF	18.8	17.6	12.0	14.3
14	SFW14R-1/2ST__LF	19.8	18.6	13.0	15.3
15	SFW15R-1/2ST__LF	20.8	19.6	14.0	16.3
16	SFW16R-1/2ST__LF	21.8	20.6	15.0	17.3
17	SFW17R-1/2ST__LF	22.8	21.6	16.0	18.3
18	SFW18R-1/2ST__LF	23.8	22.6	17.0	19.3
19	SFW19R-1/2ST__LF	24.8	23.6	18.0	20.3
20	SFW20R-1/2ST__LF	25.8	24.6	19.0	21.3
21	SFW21R-1/2ST__LF	26.8	25.6	20.0	22.3
22	SFW22R-1/2ST__LF	27.8	26.6	21.0	23.3
23	SFW23R-1/2ST__LF	28.8	27.6	22.0	24.3
24	SFW24R-1/2ST__LF	29.8	28.6	23.0	25.3
25	SFW25R-1/2ST__LF	30.8	29.6	24.0	26.3
26	SFW26R-1/2ST__LF	31.8	30.6	25.0	27.3
27	SFW27R-1/2ST__LF	32.8	31.6	26.0	28.3
28	SFW28R-1/2ST__LF	33.8	32.6	27.0	29.3
29	SFW29R-1/2ST__LF	34.8	33.6	28.0	30.3
30	SFW30R-1/2ST__LF	35.8	34.6	29.0	31.3

CAT. NO. SFW (n) R – 1 ST __ LF

- SFW — SERIES NAME
- (n) — NO. OF CONTACTS
- R — RIGHT ANGLE TYPE
- 1 — FOR FPC/FFC, CONTACT DIRECTION
  1. LOWER CONTACT TYPE
  2. UPPER CONTACT TYPE
- ST — FOR AUTOMATIC MOUNTING (SMT)
- __ — PACKAGE STYLE
- LF — LEAD FREE

NOTES

1. THIS PRODUCT IS THE CONNECTOR USED FOR FPC/FFC AND COPES WITH AUTOMATIC MOUNTING (SMT).
2. SEE PART DRAWINGS FOR DIMENSIONS A~D.
3. A AC SYMBOL WILL BE NEXT TO ANY DIMENSION, VIEW, OR NOTE WHICH HAS BEEN MODIFIED WITH THE CURRENT DRAWING REVISION.

ltr	ecn no	dr	date
AA	J05-0055	H.T	05-02-04
AB	J06-0398	H.T	06-09-26
AC	S08-0276	DGOH	08-08-22

mat'l. code | surface 58 ISO 1302 | tolerance ISO 406 ISO 1101 | projection | product family 58RF | CODE JP

tolerances unless otherwise specified: angles | linear

mm

scale X

title: CAT. NO. TABLE FOR 1mm SPACING SMT CONNECTOR (Cat. No. SFW__R-1/2ST__LF)

dr	H. TAKAKURA	06-09-26
engr	H. TAKAKURA	06-09-26
chr	DENNIS GOH	08-08-22
appd	JOEY NG	08-08-22

dwg no JSA 95854 | sheet 1 of 1 | size A4

type Product Customer Drawing

sheet index | revision AC | sheet 1 | Rev. AC

This document is the property of and embodies CONFIDENTIAL and PROPRIETARY information of FCI. No part of the information shown on this document may be used in any way or disclosed to others without the written consent of FCI. Copyright FCI.

FCIconnect.com

SC-SFW10 JSA95855 95856 95857 95858 95859 91605 91604
form: A4

PDM: Rev:AC STATUS:Released Printed: Nov 01, 2009

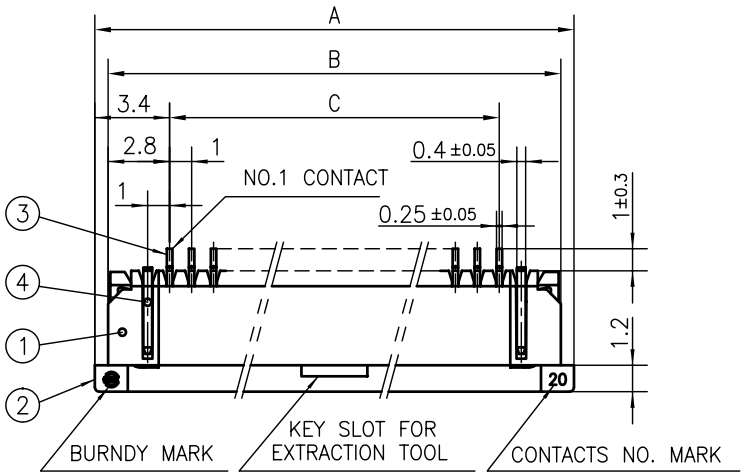

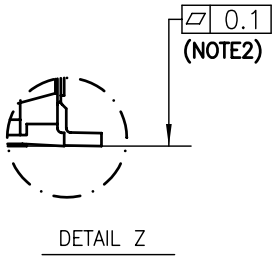

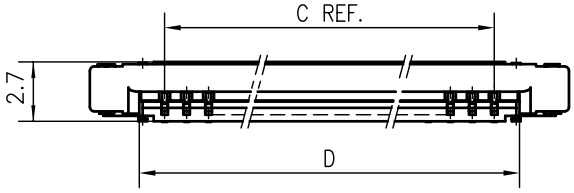

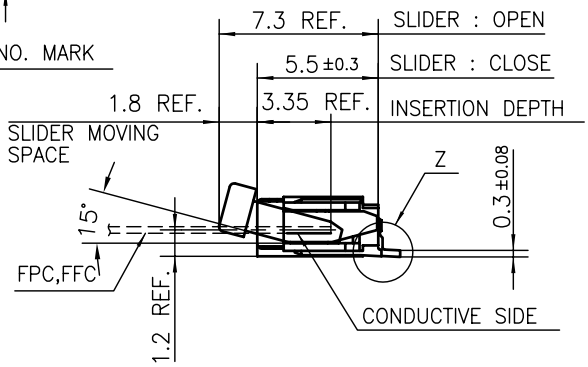

PT. NO.	PARTS NAME	MATERIAL	Q'TY	NOTE
1	HOUSING	PPS RESIN GLASS REINFORCED (UL94V-0)	1	COLOR : BROWN
2	SLIDER		1	COLOR : BLACK
3	CONTACT	PHOSPHOR BRONZE	n	PLATING : TIN
4	MOUNTING PLATE		2	

n : NO. OF CONTACTS

RECOMMENDED PC BOARD LAYOUT
(COMPONENT SIDE)

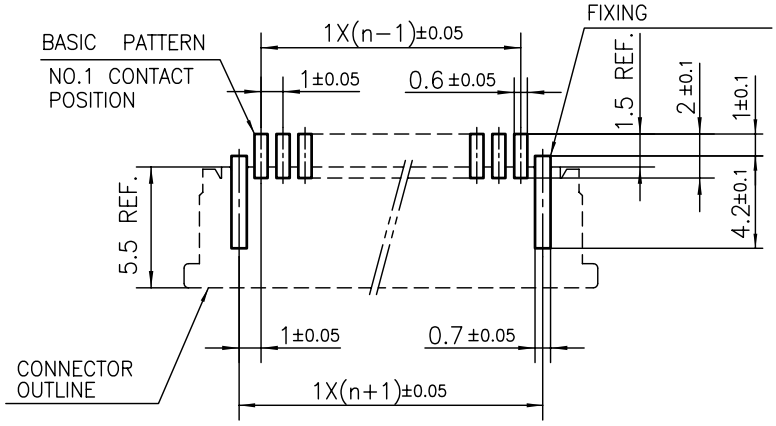

NOTES

1. THIS PRODUCT IS THE CONNECTOR USED FOR FPC/FFC AND COPES WITH AUTOMATIC MOUNTING (SMT).
2. FLATNESS FOR CONTACT TERMINAL HOUSING MUST BE WITHIN TOLERANCE IN Z PORTION DETAILED DRAWING.
3. THIS PRODUCT IS LOWER CONTACT TYPE CONNECTOR.
4. THIS PRODUCT MEETS EUROPEAN UNION DIRECTIVES AND OTHER?COUNTRY REGULATIONS AS DESCRIBED IN GS-22-008
5. THE HOUSING WILL WITHSTAND EXPOSURE TO 260°C PEAK TEMPERATURE FOR 10 SECONDS IN A REFLOW SOLDERING OVEN.

3. A AE SYMBOL WILL BE NEXT TO ANY DIMENSION, VIEW, OR NOTE WHICH HAS BEEN MODIFIED WITH THE CURRENT DRAWING. REVISION.

ltr	ecn no	dr	date
AA	J04-0180	H.T	04-07-02
AB	J05-0055	H.T	05-02-04
AC	J05-0736	H.T	05-10-28
AD	J06-0398	H.T	06-09-26
AE	S08-0276	DGOH	08-08-22

mat'l. code

surface 58 ISO 1302

tolerance ISO 406 ISO 1101

tolerances unless otherwise specified: angles ±0.2; linear

projection

mm

scale ℵ

dr	H. TAKAKURA	06-09-26
engr	H. TAKAKURA	06-09-26
chr	DENNIS GOH	08-08-22
appd	JOEY NG	08-08-22

product family 58RF

CODE JP

title 1mm SPACING SMT CONNECTOR (Cat. No. SFW__R-1ST__LF)

dwg no JSA 95855

sheet 1 of 1

size A4

type Product Customer Drawing

sheet index | revision AE | sheet 1

Rev. AE

SC_SFW10 JSA95854
form: A4

This document is the property of and embodies CONFIDENTIAL and PROPRIETARY information of FCI. No part of the information shown on this document may be used in any way or disclosed to others without the written consent of FCI. Copyright FCI.

FCIconnect.com

PDM: Rev:AE STATUS:Released Printed: Nov 01, 2009

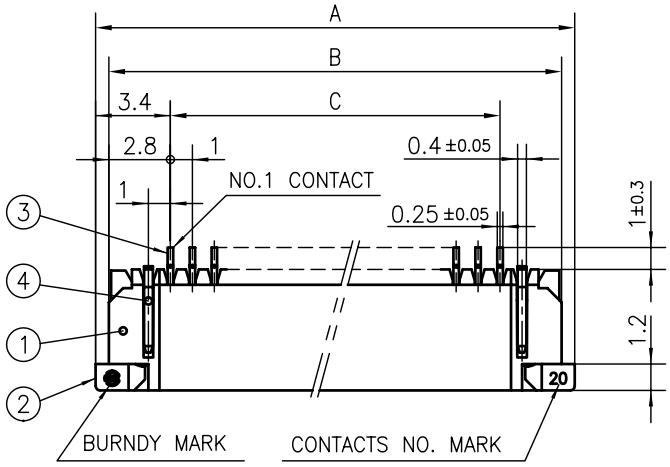

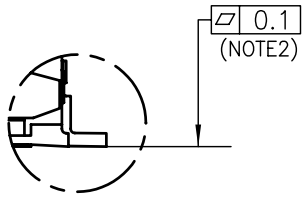

DETAIL Z

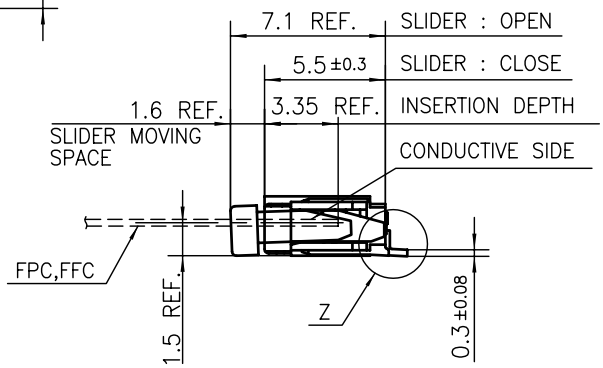

PT. NO.	PARTS NAME	MATERIAL	Q'TY	NOTE
1	HOUSING	PPS RESIN GLASS REINFORCED (UL94V-0)	1	COLOR : BROWN
2	SLIDER		1	COLOR : BLACK
3	CONTACT	PHOSPHOR BRONZE	n	PLATING : TIN
4	MOUNTING PLATE		2	

n : NO. OF CONTACTS

RECOMMENDED PC BOARD LAYOUT
(COMPONENT SIDE)

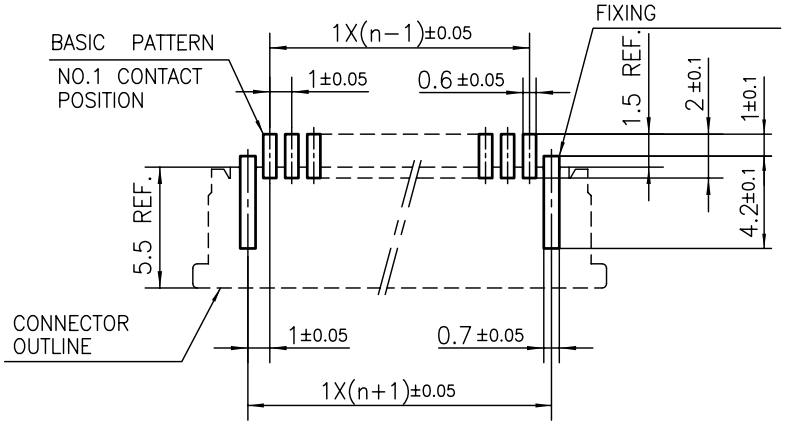

NOTES

1. THIS PRODUCT IS THE CONNECTOR USED FOR FPC/FFC AND COPES WITH AUTOMATIC MOUNTING (SMT).
2. FLATNESS FOR CONTACT TERMINAL HOUSING MUST BE WITHIN TOLERANCE IN Z PORTION DETAILED DRAWING.
3. THIS PRODUCT IS UPPER CONTACT TYPE CONNECTOR.
4. THIS PRODUCT MEETS EUROPEAN UNION DIRECTIVES AND OTHER?COUNTRY REGULATIONS AS DESCRIBED IN GS-22-008
5. THE HOUSING WILL WITHSTAND EXPOSURE TO 260°C PEAK TEMPERATURE FOR 10 SECONDS IN A REFLOW SOLDERING OVEN.
6. A AE SYMBOL WILL BE NEXT TO ANY DIMENSION, VIEW, OR NOTE WHICH HAS BEEN MODIFIED WITH THE CURRENT DRAWING REVISION.

ltr	ecn no	dr	date
AA	J04-0180	H.T	04-07-02
AB	J05-0055	H.T	05-02-04
AC	J05-0736	H.T	05-10-28
AD	J06-0398	H.T	06-09-26
AE	S08-0276	DGOH	08-08-22

mat'l. code

surface 58 ISO 1302

tolerance ISO 406 ISO 1101

tolerances unless otherwise specified: angles; linear ±0.2

projection

mm

scale ℵ

dr	H. TAKAKURA	06-09-26
engr	H. TAKAKURA	06-09-26
chr	DENNIS GOH	08-08-22
appd	JOEY NG	08-08-22

product family 58RF

CODE JP

title
1mm SPACING SMT CONNECTOR
(Cat. No. SFW__R-2ST__LF)

dwg no JSA 95856

sheet 1 of 1

size A4

type Product Customer Drawing

sheet index: revision AE; sheet 1

Rev. AE

SC_SFW10 JSA95854
form: A4

This document is the property of and embodies CONFIDENTIAL and PROPRIETARY information of FCI. No part of the information shown on this document may be used in any way or disclosed to others without the written consent of FCI. Copyright FCI.

FCIconnect.com

PDM: Rev:AE STATUS:Released Printed: Nov 01, 2009

CAT. NO. & DIMENSIONS

NO. OF CONTACTS (n)	CAT. NO. (NOTE2)	DIMENSIONS (NOTE3)		
		E ± 5	F ± 0.3	G ± 0.1
4	SFW4R-1/2STE1 LF	20.4	16	—
5	SFW5R-1/2STE1 LF	28.4	24	—
6	SFW6R-1/2STE1 LF	28.4	24	—
7	SFW7R-1/2STE1 LF	28.4	24	—
8	SFW8R-1/2STE1 LF	28.4	24	—
9	SFW9R-1/2STE1 LF	28.4	24	—
10	SFW10R-1/2STE1 LF	28.4	24	—
11	SFW11R-1/2STE1 LF	28.4	24	—
12	SFW12R-1/2STE1 LF	28.4	24	—
13	SFW13R-1/2STE1 LF	36.4	32	28.4
14	SFW14R-1/2STE1 LF	36.4	32	28.4
15	SFW15R-1/2STE1 LF	36.4	32	28.4
16	SFW16R-1/2STE1 LF	36.4	32	28.4
17	SFW17R-1/2STE1 LF	48.4	44	40.4
18	SFW18R-1/2STE1 LF	48.4	44	40.4
19	SFW19R-1/2STE1 LF	48.4	44	40.4
20	SFW20R-1/2STE1 LF	48.4	44	40.4
21	SFW21R-1/2STE1 LF	48.4	44	40.4
22	SFW22R-1/2STE1 LF	48.4	44	40.4
23	SFW23R-1/2STE1 LF	48.4	44	40.4
24	SFW24R-1/2STE1 LF	48.4	44	40.4
25	SFW25R-1/2STE1 LF	48.4	44	40.4
26	SFW26R-1/2STE1 LF	48.4	44	40.4
27	SFW27R-1/2STE1 LF	48.4	44	40.4
28	SFW28R-1/2STE1 LF	60.4	56	52.4
29	SFW29R-1/2STE1 LF	60.4	56	52.4
30	SFW30R-1/2STE1 LF	60.4	56	52.4

CAT. NO. SFW (n) R – 1 ST E1 LF

- SFW — SERIES NAME
- (n) — NO. OF CONTACTS
- R — RIGHT ANGLE TYPE
- 1 — FOR FPC/FFC, CONTACT DIRECTION
  1. LOWER CONTACT TYPE
  2. UPPER CONTACT TYPE
- ST — FOR AUTOMATIC MOUNTING (SMT)
- E1 — TAPE PACKAGING
- LF — LEAD FREE

NOTES

1. THIS PRODUCT IS THE CONNECTOR USED FOR FPC/FFC AND COPES WITH AUTOMATIC MOUNTING (SMT).
2. THIS CATALOG NO. INDICATES PLASTIC TAPE PACKAGED CONNECTOR.
3. SEE PART DRAWINGS FOR DIMENSIONS E~G.
4. A AC SYMBOL WILL BE NEXT TO ANY DIMENSION, VIEW, OR NOTE WHICH HAS BEEN MODIFIED WITH THE CURRENT DRAWING REVISION.

ltr	ecn no	dr	date
AA	J05-0055	H.T	05-02-04
AB	J06-0398	H.T	06-09-26
AC	S08-0276	DGOH	08-08-22

mat'l. code | surface 58 ISO 1302 | tolerance ISO 406 ISO 1101 | projection | product family 58RF | CODE JP

tolerances unless otherwise specified: angles | linear

mm

scale ℵ

title: CAT. NO. TABLE FOR PLASTIC TAPE PACKAGED 1mm SPACING SMT CONNECTOR (Cat. No. SFW__R-1/2STE1 LF)

dr	H. TAKAKURA	06-09-26
engr	H. TAKAKURA	06-09-26
chr	DENNIS GOH	08-08-22
appd	JOEY NG	08-08-22

dwg no JSA 95857 | sheet 1 of 1 | size A4

type Product Customer Drawing

sheet index | revision AC | sheet 1 | Rev. AC

SC_SFW10 JSA95854 95858 95859
form: A4

This document is the property of and embodies CONFIDENTIAL and PROPRIETARY information of FCI. No part of the information shown on this document may be used in any way or disclosed to others without the written consent of FCI. Copyright FCI.

FCIconnect.com

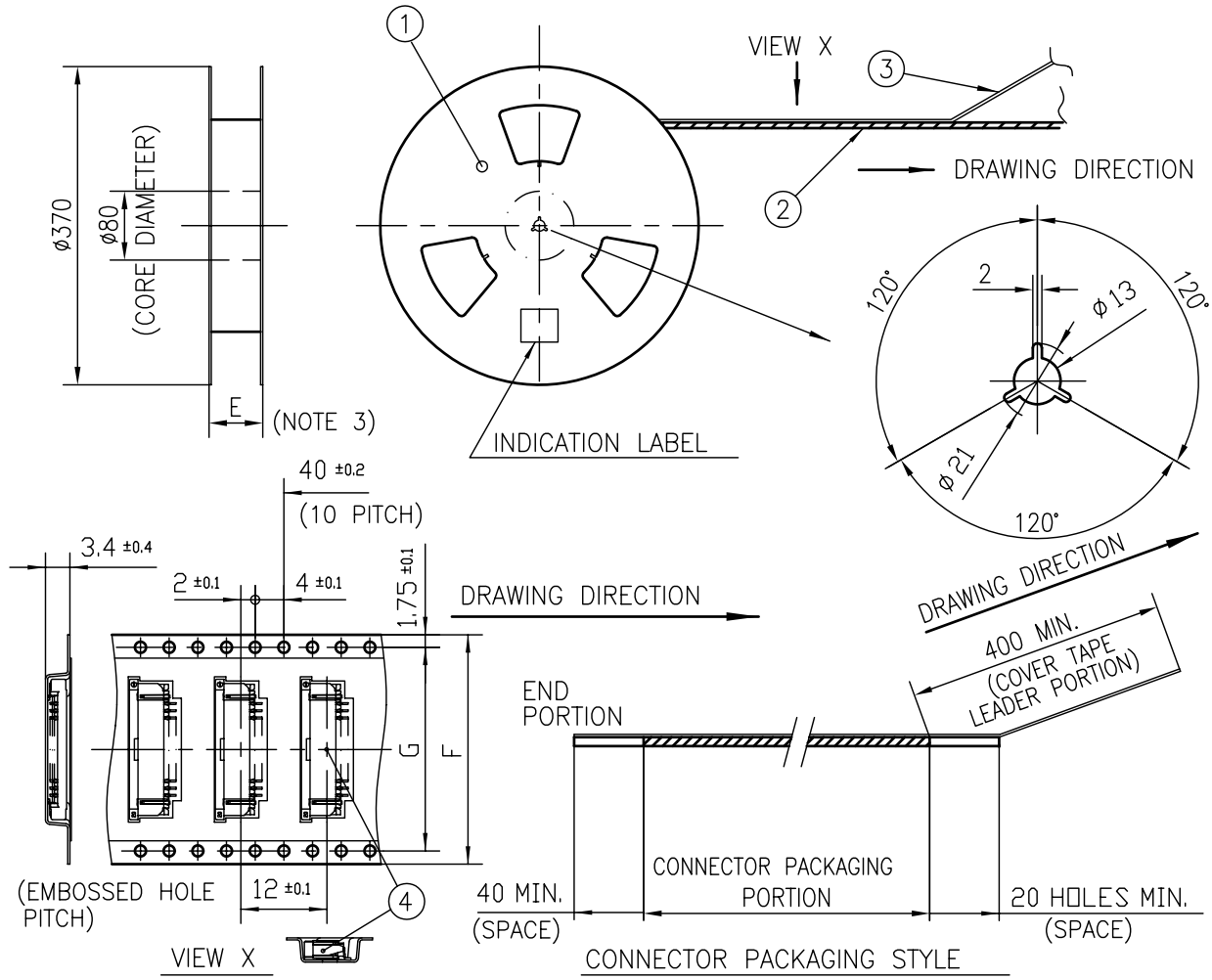

PT. NO.	PARTS NAME	CAT. NO.	MATERIAL	Q'TY	NOTE
1	REEL	————	CARDBOARD	1	COLOR:WHITE/GREY
2	PLASTIC (EMBOSS) TAPE	————	PET	——	COLOR:TRANSPARENCY
3	COVER	————	POLYESTER	——	COLOR:TRANSPARENCY
4	CONNECTOR	SFW__R-1ST__LF	SEE ATTACHED DWG.	2000	LOWER CONTACT TYPE

NOTES

1. THIS IS PLASTIC TAPE PACKAGED CONNECTOR USED FOR FPC/FFC AND COPES WITH AUTOMATIC MOUNTING (SMT).
2. SEE JIS C 0806 (PACKING OF ELECTRONIC COMPONENTS ON CONTINUOUS TAPES (SURFACE MOUNTING DEVICES)) FOR SHAPE AND DIMENSIONS OF PLASTIC (EMBOSS) TAPE AND REEL.
3. E DIMENSION IS PORTION OF THE CORE.
4. A AC SYMBOL WILL BE NEXT TO ANY DIMENSION, VIEW, OR NOTE WHICH HAS BEEN MODIFIED WITH THE CURRENT DRAWING REVISION.

ltr	ecn no	dr	date
AA	J05-0055	H.T	05/02/04
AB	J06-0398	H.T	06/09/26
AC	S08-0276	DGOH	08-08-22

mat'l. code

surface 58 ISO 1302

tolerance ISO 406 ISO 1101

tolerances unless otherwise specified: angles ±5°; linear ±5

projection

mm

scale ℵ

product family 58RF

CODE JP

title PLASTIC TAPE PACKAGED 1mm SPACING SMT CONNECTOR (Cat. No. SFW__R-1STE1 LF)

dr	H. TAKAKURA	06-09-26
engr	H. TAKAKURA	06-09-26
chr	DENNIS GOH	08-08-22
appd	JOEY NG	08-08-22

dwg no JSA 95858

sheet 1 of 1

size A4

type Product Customer Drawing

sheet index | revision AC | sheet 1

Rev. AC

SC_SFW10 JSA95857
form: A4

This document is the property of and embodies CONFIDENTIAL and PROPRIETARY information of FCI. No part of the information shown on this document may be used in any way or disclosed to others without the written consent of FCI. Copyright FCI.

FCIconnect.com

PDM: Rev:AC STATUS:Released Printed: Nov 01, 2009

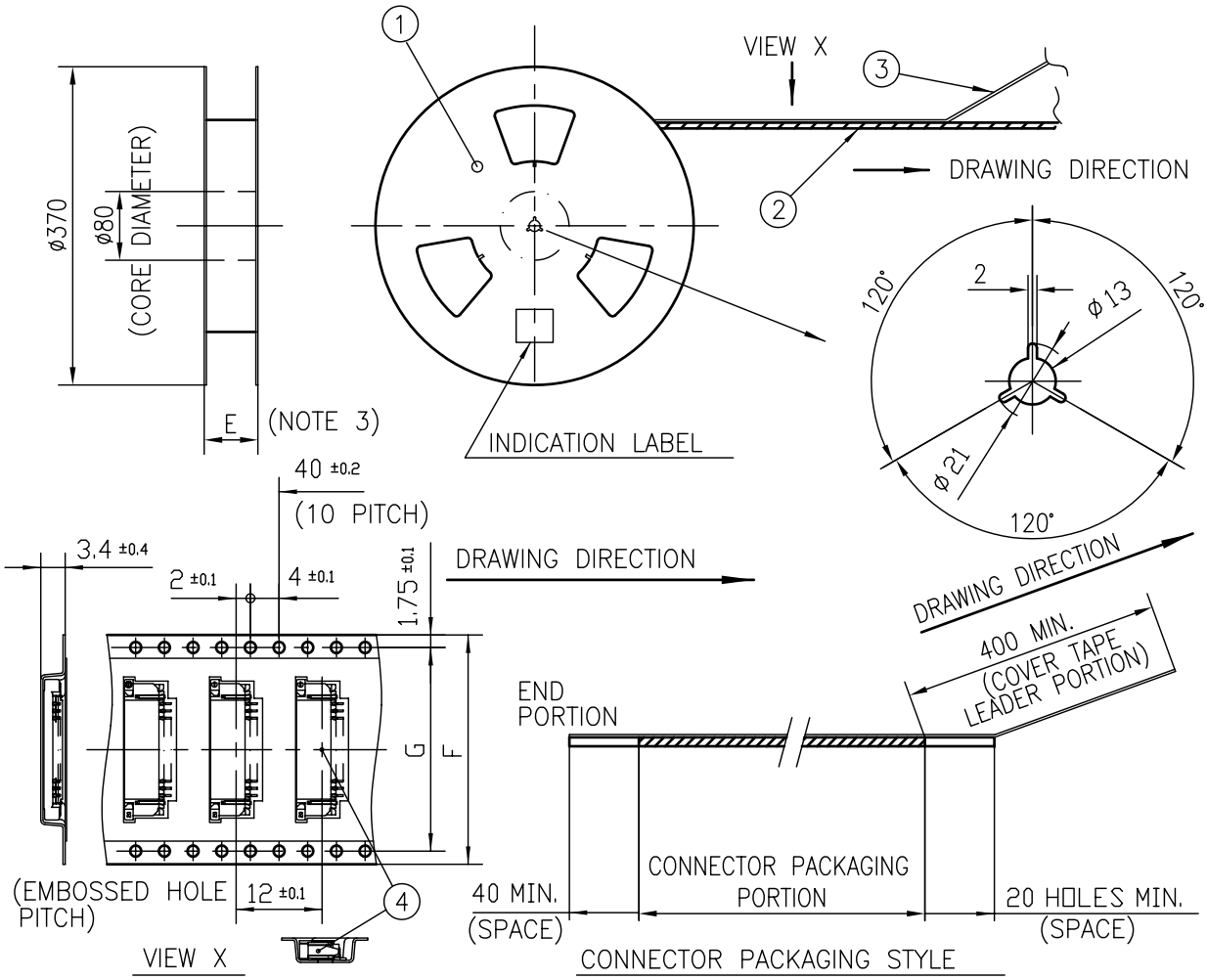

PT. NO.	PARTS NAME	CAT. NO.	MATERIAL	Q'TY	NOTE
1	REEL	———	CARDBOARD	1	COLOR:WHITE/GREY
2	PLASTIC (EMBOSS) TAPE	———	PET	——	COLOR:TRANSPARENCY
3	COVER	———	POLYESTER	——	COLOR:TRANSPARENCY
4	CONNECTOR	SFW__R-2ST__LF	SEE ATTACHED DWG.	2000	UPPER CONTACT TYPE

NOTES

1. THIS IS PLASTIC TAPE PACKAGED CONNECTOR USED FOR FPC/FFC AND COPES WITH AUTOMATIC MOUNTING (SMT).
2. SEE JIS C 0806 (PACKING OF ELECTRONIC COMPONENTS ON CONTINUOUS TAPES (SURFACE MOUNTING DEVICES)) FOR SHAPE AND DIMENSIONS OF PLASTIC (EMBOSS) TAPE AND REEL.
3. E DIMENSION IS PORTION OF THE CORE.
4. A AC SYMBOL WILL BE NEXT TO ANY DIMENSION, VIEW, OR NOTE WHICH HAS BEEN MODIFIED WITH THE CURRENT DRAWING REVISION.

mat'l. code				surface ISO 1302 58	tolerance ISO 406 ISO 1101	projection	product family 58RF	CODE JP
ltr	ecn no	dr	date	tolerances unless otherwise specified			title PLASTIC TAPE PACKAGED 1mm SPACING SMT CONNECTOR (Cat. No. SFW__R-2STE1 LF)	
AA	J05-0055	H.T	05-02-04	angles	linear ±5	mm		
AB	J06-0398	H.T	06-09-26					
AC	S08-0276	DGOH	08-08-22	±5°		scale 2:1		
				dr	H. TAKAKURA	06-09-26	dwg no JSA 95859	sheet 1 of 1 size A4
				engr	H. TAKAKURA	06-09-26		
				chr	DENNIS GOH	08-08-22		
				appd	JOEY NG	08-08-22	type Product Customer Drawing	
sheet index	revision	AC						Rev. AC
	sheet	1						

This document is the property of and embodies CONFIDENTIAL and PROPRIETARY information of FCI. No part of the information shown on this document may be used in any way or disclosed to others without the written consent of FCI. Copyright FCI.

FCIconnect.com

SC_SFW10 JSA95857
form: A4

PDM: Rev:AC STATUS:Released Printed: Nov 01, 2009

RECOMMENDED CABLE (FPC)

n : NO. OF CONDUCTOR

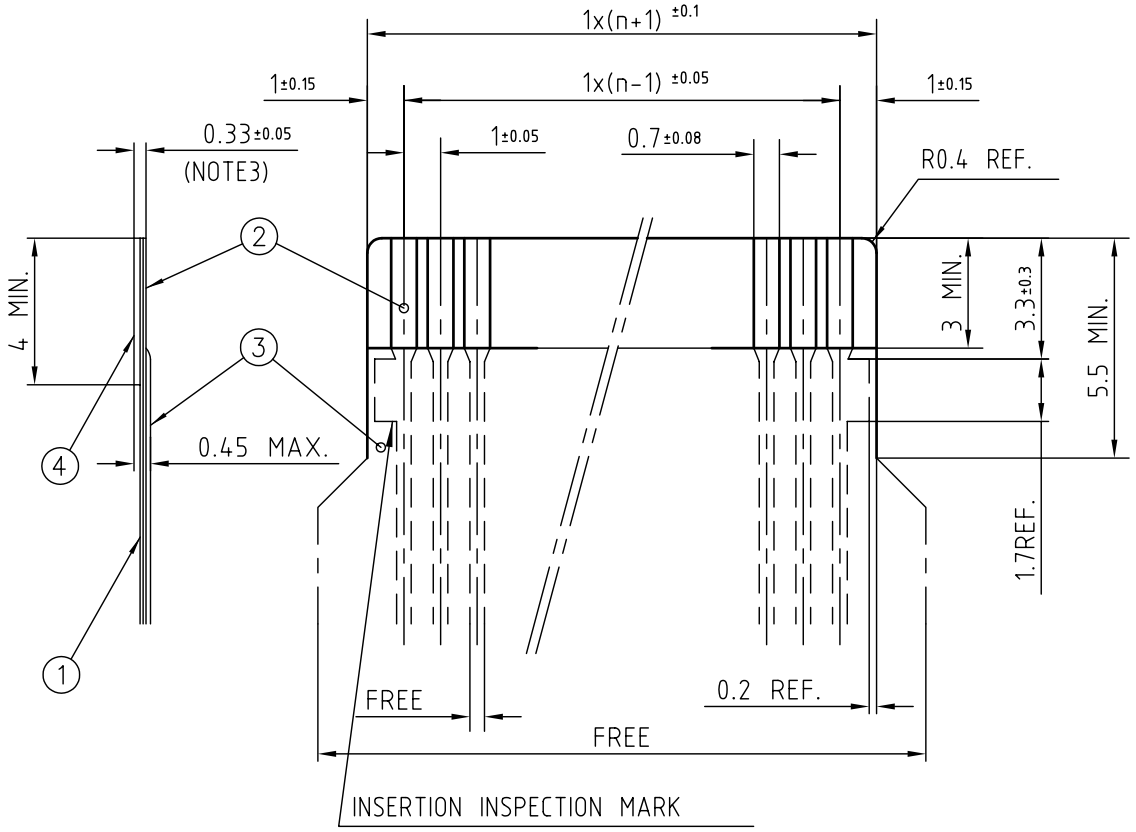

PT. NO.	PARTS NAME	MATERIAL	THICKNESS (um)
1	BASE FILM	POLYIMIDE OR POLYESTER OR EQUAL	25
2	CONDUCTOR	COPPER FOIL(PLATING:SOLDER 1um MIN.)	35
3	OVERLAY	POLYIMIDE OR POLYESTER OR EQUAL	——
4	SUPPORTING TAPE	POLYESTER OR POLYIMIDE OR EQUAL	188

NOTES

1. NO BURR AT EACH PORTION.
2. NO PEELING IN COMMON USE.
3. TOTAL THICKNESS LIMIT OF EACH MATERIAL (INCLUDING ADHESIVE AGENT) IS SPECIFIED.
4. A AC SYMBOL WILL BE NEXT TO ANY DIMENSION, VIEW, OR NOTE WHICH HAS BEEN MODIFIED WITH THE CURRENT DRAWING REVISION.

mat'l. code				surface ISO 1302 58	tolerance ISO 406 ISO 1101	projection	product family 58RF	CODE JP
ltr	ecn no	dr	date	tolerances unless otherwise specified			title RECOMMENDED CABLE (Cat. No. SFW__R-1/2___)
AA	J05-0055	H.T	05-02-04	angles	linear	mm	
AB	J06-0398	H.T	06-09-26				
AC	S08-0276	DGOH	08-08-22			scale ℵ	
				dr	H. TAKAKURA	06-09-26	dwg no JSA 91605 sheet 1 of 1 size A4
				engr	H. TAKAKURA	06-09-26	
				chr	DENNIS GOH	08-08-22	
				appd	JOEY NG	08-08-22	type Product Customer Drawing
sheet index	revision	AC					Rev. AC
	sheet	1					

This document is the property of and embodies CONFIDENTIAL and PROPRIETARY information of FCI. No part of the information shown on this document may be used in any way or disclosed to others without the written consent of FCI. Copyright FCI.

FCIconnect.com

form: A4

RECOMMENDED CABLE (FFC)

n : NO. OF CONDUCTOR

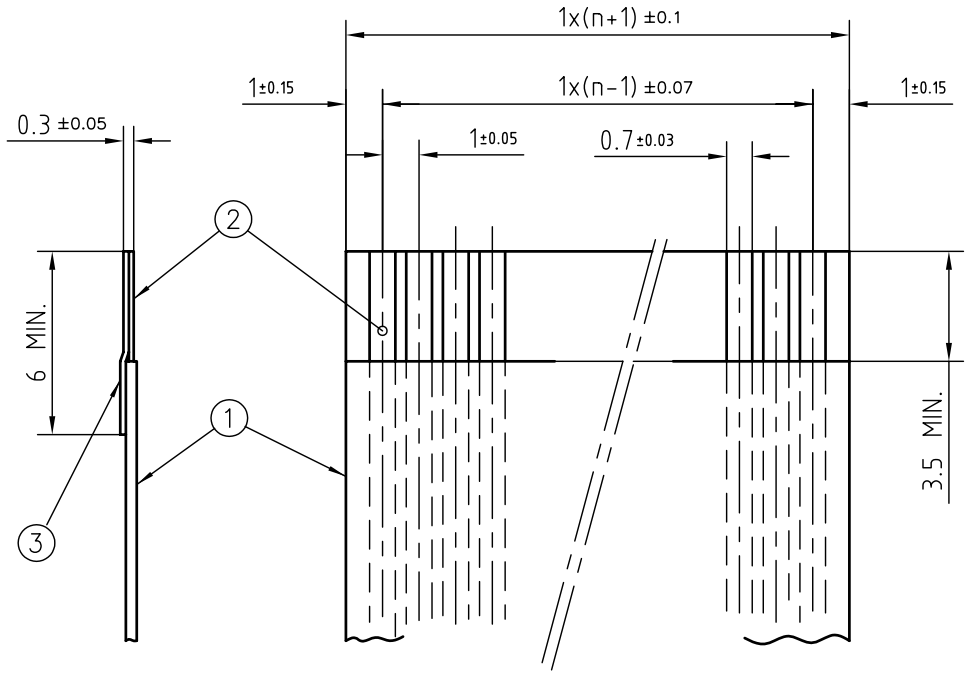

PT. NO.	PARTS NAME	MATERIAL	NOTE
1	INSULATOR	FLAME RESISTING POLYESTER OR EQUAL	———
2	CONDUCTOR	COPPER FOIL	PLATING:TIN OR SOLDER 1um MIN.
3	SUPPORTING TAPE	FLAME RESISTING POLYESTER OR EQUAL	———

NOTES

1. NO BURR AT EACH PORTION.
2. NO PEELING IN COMMON USE.
3. A AC SYMBOL WILL BE NEXT TO ANY DIMENSION, VIEW, OR NOTE WHICH HAS BEEN MODIFIED WITH THE CURRENT DRAWING REVISION.

ltr	ecn no	dr	date
AA	J05-0055	H.T	05-02-04
AB	J06-0398	H.T	06-09-26
AC	S08-0276	DGOH	08-08-22

mat'l. code

surface 58 ISO 1302

tolerance ISO 406 ISO 1101

tolerances unless otherwise specified: angles; linear

projection

mm

scale X

dr	H. TAKAKURA	06-09-26
engr	H. TAKAKURA	06-09-26
chr	DENNIS GOH	08-08-22
appd	JOEY NG	08-08-22

product family 58RF

CODE JP

title RECOMMENDED CABLE (Cat. No. SFW__R-1/2___)

dwg no JSA 91604

sheet 1 of 1

size A4

type Product Customer Drawing

sheet index: revision AC; sheet 1

Rev. AC

This document is the property of and embodies CONFIDENTIAL and PROPRIETARY information of FCI. No part of the information shown on this document may be used in any way or disclosed to others without the written consent of FCI. Copyright FCI.

FCIconnect.com

form: A4

PDM: Rev:AC STATUS:Released Printed: Jun 02, 2010