THIS DRAWING IS UNPUBLISHED. RELEASED FOR PUBLICATION 20
© COPYRIGHT 20 BY TYCO ELECTRONICS CORPORATION ALL RIGHTS RESERVED.

| PART NUMBER | REV | TERMINATOR | FEED TYPE | DESCRIPTION |
|---|---|---|---|---|
| 1530019-1 | A | LEADMAKER | MECH POST FEED | CUTS CARRIER |
| 1530019-2 | A | BENCH | MECH PRE FEED | CUTS CARRIER |
| 1530019-6 | A | LEADMAKER | MECH POST FEED | CONTINUOUS CARRIER |
| 7-1530019-1 | A | LEADMAKER | MECH POST FEED | -1 AND SPARE PARTS |
| 7-1530019-2 | A | BENCH | MECH PRE FEED | -2 AND SPARE PARTS |
| 7-1530019-6 | A | LEADMAKER | MECH POST FEED | -6 AND SPARE PARTS |
| 7-1530019-7 | A | - | - | SPARE PARTS KIT |

SET UP GAGE 458637-3 | LOC A | DIST 66

| REVISIONS | | | | |
|---|---|---|---|---|
| P | LTR | DESCRIPTION | DATE | DWN | APVD |
| | A | RELEASED | 01OCT2006 | DM | DM |
| | A2 | CORRECTED REVISION IN DM | 28FEB2008 | SZ | SX |

| CRIMP DATA | TE TERMINAL | | TE CRIMP SPECS |
|---|---|---|---|
| TERMINAL NAME: PIN, .060 DIA, AUTOMOTIVE | | | |
| CRIMP | SIZE | TYPE | RANGE |
| WIRE | 1.57 [.062 IN] | F | 18 - 22 AWG |
| INSUL | 2.79 [.110 IN] | F | 2.794 [.110 IN] MAX |
| WIRE STRIP LENGTH 3.9-4.7 [.154-.185 IN] | | | APPL INSTRUCTIONS 408-8322 & 408-8490 |
| TERMINAL APPL SPEC | 114-3118 - | | FEED 9.14 [.360 IN] |

TERMINALS APPLIED

| PIN | SOCKET | - | - |
|---|---|---|---|
| 61062 | 61064 | - | - |
| 61366 | 170087 | - | - |
| 770381 | - | - | - |
| - | - | - | - |

| WIRE SIZE | CRIMP HEIGHT * | REF SETTING * |
|---|---|---|
| 18 AWG | 1.07 ±0.05 [.042 ±.002 IN] | B2 |
| 20 AWG | .91 ±0.05 [.036 ±.002 IN] | C3 |
| 22 AWG | .84 ±0.05 [.033 ±.002 IN] | C8 |
| - | - | - |
| - | - | - |
| - | - | - |
| - | - | - |
| - | - | - |
| - | - | - |
| - | - | - |
| - | - | - |
| - | - | - |
| - | - | - |

1. RECOMMENDED SPARE PARTS.
2. GREASE RAM, CAM, CAM FOLLOWER AND FEED ROD LIGHTLY.
3. CERTAIN TERMINALS REQUIRE LUBRICATION. REFER TO THE APPLICATOR INSTRUCTION SHEET FOR MORE INFORMATION.
4. LUBRICATE DAILY PER THE APPLICATOR INSTRUCTION SHEET SUPPLIED WITH THE APPLICATOR.

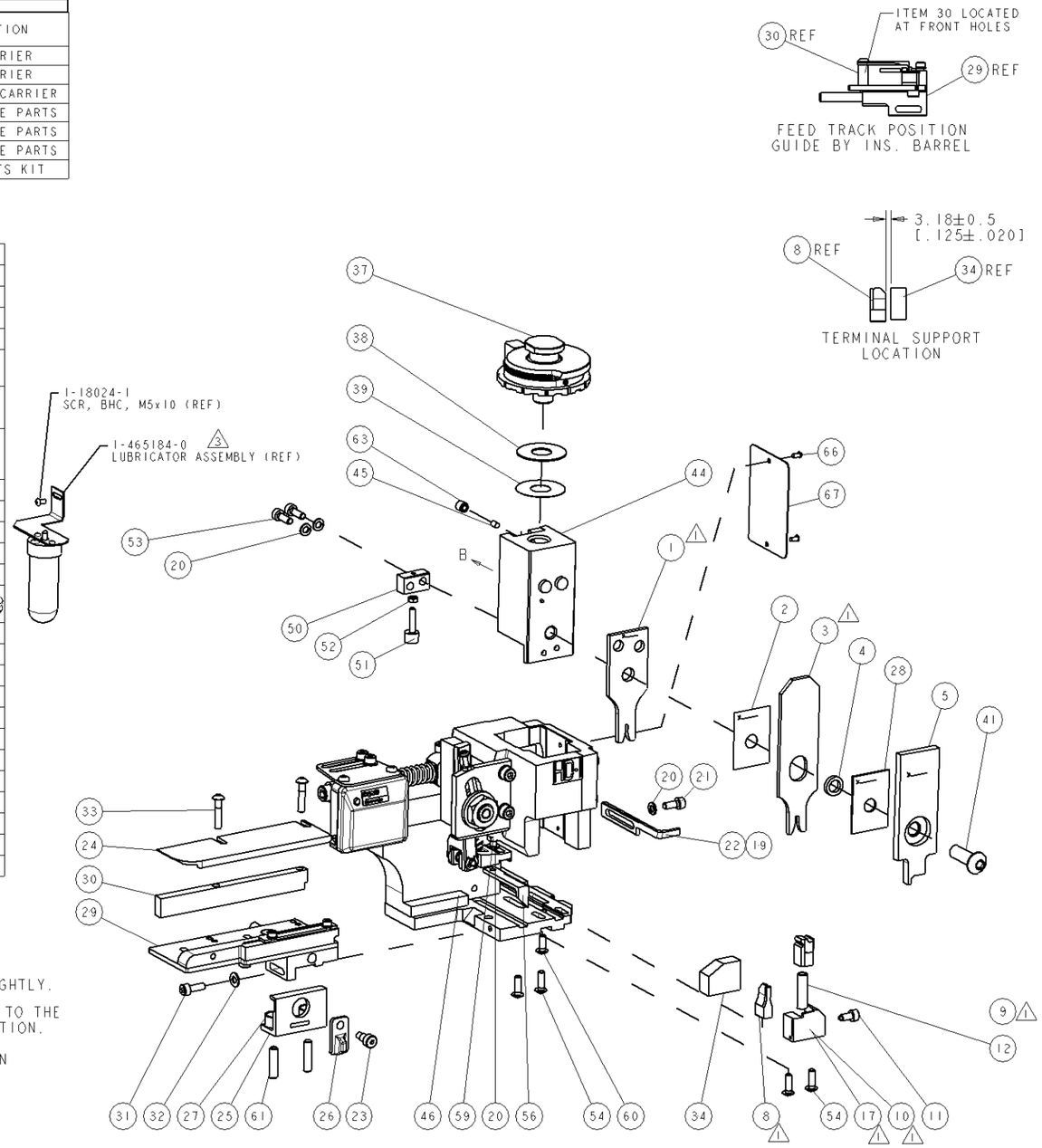


* WARNING
ON INSTALLATION, SET WIRE DISC TO LARGEST WIRE SIZE SETTING. USE OF SETTINGS BELOW MIN. REQUIRED CRIMP HEIGHT SETTING WILL CAUSE DAMAGE TO CRIMP TOOLING.

VIEW B ROTATED 180°

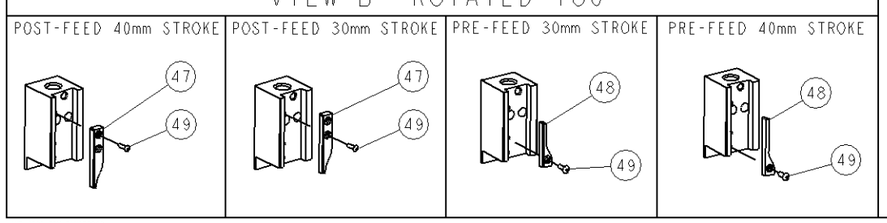


| -77 | -76 | -72 | -71 | -6 | -2 | -1 | PART NO | DESCRIPTION | ITEM NO |
|---|---|---|---|---|---|---|---|---|---|
| - | - | - | - | - | - | - | - | - | 84 |
| - | - | - | - | - | - | - | - | - | 83 |
| - | - | - | - | - | - | - | - | - | 82 |
| - | - | - | - | - | - | - | - | - | 81 |
| - | - | - | - | - | - | - | - | - | 80 |
| - | - | - | - | - | - | - | - | - | 79 |
| - | - | - | - | - | - | - | - | - | 78 |
| - | - | - | - | - | - | - | - | - | 77 |
| - | - | - | - | - | - | - | - | - | 76 |
| - | - | - | - | - | - | - | - | - | 75 |
| - | - | - | - | - | - | - | - | - | 74 |
| -77 | -76 | -72 | -71 | -6 | -2 | -1 | PART NO | DESCRIPTION | ITEM NO |

| -77 | -76 | -72 | -71 | -6 | -2 | -1 | PART NO | DESCRIPTION | ITEM NO |
|---|---|---|---|---|---|---|---|---|---|
| - | - | - | - | - | - | - | - | - | 73 |
| - | - | - | - | - | - | - | - | - | 72 |
| - | 1 | 1 | 1 | 1 | 1 | 1 | 1338705-3 | DOCUMENTATION PACKAGE | 71 |
| - | - | - | - | - | - | - | - | - | 70 |
| - | - | - | - | - | - | - | - | - | 69 |
| - | - | - | - | - | - | - | - | - | 68 |
| - | 1 | 1 | 1 | 1 | 1 | 1 | 461264-5 | PLATE, IDENTIFICATION | 67 |
| - | 2 | 2 | 2 | 2 | 2 | 2 | 21017-2 | SCREW, DRIVE | 66 |
| - | - | - | - | - | - | - | - | - | 65 |
| - | - | - | - | - | - | - | - | - | 64 |
| - | 1 | 1 | 1 | 1 | 1 | 1 | 3-18031-0 | SCR, SET, CUP POINT M6 X 6.0 | 63 |
| - | - | - | - | - | - | - | - | - | 62 |
| - | 2 | 2 | 2 | 2 | 2 | 2 | 2-18032-5 | SCR, SET, FLT POINT M5 X 20.0 | 61 |
| - | 1 | 1 | 1 | 1 | 1 | 1 | 18024-7 | SCR, BTN SKT HD CAP (M4 X 10.0) | 60 |
| - | 1 | 1 | 1 | 1 | 1 | 1 | 5-18022-2 | SCR, HEX HD CAP M4 X 8.0 | 59 |
| - | - | - | - | - | - | - | - | - | 58 |
| - | - | - | - | - | - | - | - | - | 57 |
| - | 1 | 1 | 1 | 1 | 1 | 1 | 1338685-1 | PAWL, FEED | 56 |
| - | - | - | - | - | - | - | - | - | 55 |
| - | 4 | 4 | 4 | 4 | 4 | 4 | 18024-8 | SCR, BTN SKT HD CAP (M4 X 12.0) | 54 |
| - | 2 | 2 | 2 | 2 | 2 | 2 | 1-18023-2 | SCR, SKT HD CAP M4 X 12.0 | 53 |
| - | 1 | 1 | 1 | 1 | 1 | 1 | 18030-1 | NUT, HEX, REG M3 | 52 |
| - | 1 | 1 | 1 | 1 | 1 | 1 | 811242-5 | BUMPER, HOLD DOWN | 51 |
| - | 1 | 1 | 1 | 1 | 1 | 1 | 690753-2 | SPACER, TONKER | 50 |
| - | 1 | 1 | 1 | 1 | 1 | 1 | 18024-3 | SCR, BTN SKT HD CAP (M3 X 10.0) | 49 |
| - | - | 1 | - | 1 | 1 | - | 1338675-1 | CAM, UNIVERSAL PRE FEED | 48 |
| - | 1 | - | 1 | 1 | 1 | 1 | 1338676-1 | CAM, UNIVERSAL POST-FEED | 47 |
| - | 1 | 1 | 1 | 1 | 1 | 1 | 1320999-3 | APPLICATOR SUBASSEMBLY, HDI | 46 |
| - | 1 | 1 | 1 | 1 | 1 | 1 | 690191-1 | PLUG,NYLON | 45 |
| - | 1 | 1 | 1 | 1 | 1 | 1 | 1338660-1 | RAM | 44 |
| - | - | - | - | - | - | - | - | - | 43 |
| - | - | - | - | - | - | - | - | - | 42 |
| - | 1 | 1 | 1 | 1 | 1 | 1 | 2-18024-6 | SCR, BTN SKT HD CAP (M8 X 25.0) | 41 |
| - | - | - | - | - | - | - | - | - | 40 |
| - | 1 | 1 | 1 | 1 | 1 | 1 | 690125-1 | SHIM SUB-ASSY | 39 |
| - | 1 | 1 | 1 | 1 | 1 | 1 | 469367-8 | SHIM | 38 |
| - | 1 | 1 | 1 | 1 | 1 | 1 | 879103-3 | FINE ADJUST HEAD ASSEMBLY | 37 |
| - | - | - | - | - | - | - | - | - | 36 |
| - | - | - | - | - | - | - | - | - | 35 |
| - | 1 | 1 | 1 | 1 | 1 | 1 | 1320934-1 | SUPPORT, TERMINAL | 34 |
| - | 2 | 2 | 2 | 2 | 2 | 2 | 1-18024-0 | SCR, BTN SKT HD CAP (M4 X 20.0) | 33 |
| - | 1 | 1 | 1 | 1 | 1 | 1 | 18027-2 | WASHER, FLAT, REG M4 | 32 |
| - | 1 | 1 | 1 | 1 | 1 | 1 | 1-18023-2 | SCR, SKT HD CAP M4 X 12.0 | 31 |
| - | 1 | 1 | 1 | 1 | 1 | 1 | 1320908-1 | SPACER, STRIP GUIDE | 30 |
| - | 1 | 1 | 1 | 1 | 1 | 1 | 1633073-1 | STRIP GUIDE ASSEMBLY | 29 |
| - | 1 | 1 | 1 | 1 | 1 | 1 | 1-455888-0 | SPACER, CRIMPER | 28 |
| - | 2 | 2 | 2 | 2 | 2 | 2 | 1-22284-0 | SPRING, COMPRESSION | 27 |
| - | 1 | 1 | 1 | 1 | 1 | 1 | 356835-1 | LEVER, DRAG RELEASE | 26 |
| - | 1 | 1 | 1 | 1 | 1 | 1 | 240792-1 | DRAG, TERMINAL | 25 |
| - | 1 | 1 | 1 | 1 | 1 | 1 | 1320928-1 | PLATE, STRIP GUIDE | 24 |
| - | 1 | 1 | 1 | 1 | 1 | 1 | 980371-4 | SCR, SKT HD SHLDR 5.0 DIA X 6.0 | 23 |
| - | 1 | - | 1 | 1 | - | 1 | 690472-2 | STRIPPER | 22 |
| - | 1 | 1 | 1 | 1 | 1 | 1 | 1-18023-1 | SCR, SKT HD CAP M4 X 10.0 | 21 |
| - | 4 | 4 | 4 | 4 | 4 | 4 | 18025-2 | WASHER, SPRG LOCK, REG M4 | 20 |
| - | - | 1 | - | - | 1 | - | 690472-1 | STRIPPER | 19 |
| - | - | - | - | - | - | - | - | - | 18 |
| 1 | - | 1 | - | - | 1 | - | - | 1338684-1 | SHEAR HOLDER, FRONT | 17 |
| - | - | - | - | - | - | - | - | - | 16 |
| - | - | - | - | - | - | - | - | - | 15 |
| - | - | - | - | - | - | - | - | - | 14 |
| - | - | - | - | - | - | - | - | - | 13 |
| - | 1 | 1 | 1 | 1 | 1 | 1 | 3-22280-3 | SPRING, COMPRESSION | 12 |
| - | 1 | 1 | 1 | 1 | 1 | 1 | 356885-4 | STOP, SHEAR | 11 |
| 1 | - | 1 | 1 | - | 1 | 1 | 1320921-1 | SHEAR HOLDER, FRONT, CUT | 10 |
| 1 | - | 1 | 1 | 1 | 1 | 1 | 462006-1 | FLOATING SHEAR, FRONT | 9 |
| 1 | 1 | 2 | 2 | 2 | 1 | 1 | 1633129-1 | ANVIL, COMBINATION .062 | 8 |
| - | - | - | - | - | - | - | - | - | 7 |
| - | - | - | - | - | - | - | - | - | 6 |
| - | 1 | 1 | 1 | 1 | 1 | 1 | 2-455889-0 | DEPRESSOR, SHEAR | 5 |
| - | 1 | 1 | 1 | 1 | 1 | 1 | 238011-4 | BLOCK, CRIMPER SPACER | 4 |
| 1 | 2 | 2 | 2 | 1 | 1 | 1 | 6-456134-5 | CRIMPER, INSULATION F PREMIUM | 3 |
| - | 1 | 1 | 1 | 1 | 1 | 1 | 455888-1 | SPACER, CRIMPER | 2 |
| 1 | 2 | 2 | 2 | 1 | 1 | 1 | 1-456403-5 | CRIMPER, WIRE PREMIUM | 1 |
| -77 | -76 | -72 | -71 | -6 | -2 | -1 | PART NO | DESCRIPTION | ITEM NO |

THIS DRAWING IS A CONTROLLED DOCUMENT FOR TYCO ELECTRONICS CORPORATION IN-HOUSE USE. ANY REVISIONS TO THIS DRAWING OR PRODUCTION SHOULD BE CONTACTED FOR THE LATEST REVISION

DWN D MORRIS 22SEPT2008
CHK D MORRIS 22SEPT2008
APVD N DEMING 24SEPT2008
PRODUCT SPEC -
APPLICATION SPEC See Table
WEIGHT -

DIMENSIONS: mm [IN]
TOLERANCES UNLESS OTHERWISE SPECIFIED:
0 PLC ±
1 PLC ±
2 PLC ±
3 PLC ±
4 PLC ±
ANGLES ±°
MATERIAL -
FINISH -

Tyco Electronics
Tyco Electronics
Harrisburg, PA 17105-3608

NAME FINE ADJUST SIDE FEED HDI APPLICATOR -

SIZE A1 | CAGE CODE 00779 | DRAWING NO C-1530019 | RESTRICTED TO -

CUSTOMER ACCESSIBLE PRODUCT DRAWING | SCALE 3:5 | SHEET 1 OF 1 | REV A2