19-3005; Rev 3; 7/07

Buffered, Fast-Settling, Dual, 12-/10-/8-Bit, Voltage-Output DACs

General Description

The MAX5290–MAX5295 dual, 12-/10-/8-bit, voltage-output digital-to-analog converters (DACs) offer buffered outputs and a 3µs maximum settling time at the 12-bit level. The DACs operate from a 2.7V to 5.25V analog supply and a separate 1.8V to 3.6V digital supply. The 20MHz 3-wire serial interface is compatible with SPI™, QSPI™, MICROWIRE™, and digital signal processor (DSP) protocol applications. Multiple devices can share a common serial interface in direct access or daisy-chained configuration. The MAX5290–MAX5295 provide two multifunctional, user-programmable, digital I/O ports. The externally selectable power-up states of the DAC outputs are either zero scale, midscale, or full scale. Software-selectable FAST and SLOW settling modes decrease settling time in FAST mode, or reduce supply current in SLOW mode.

The MAX5290/MAX5291 are 12-bit DACs, the MAX5292/MAX5293 are 10-bit DACs, and the MAX5294/MAX5295 are 8-bit DACs. The MAX5290/ MAX5292/MAX5294 provide unity-gain-configured output buffers, while the MAX5291/MAX5293/MAX5295 provide force-sense-configured output buffers. The MAX5290– MAX5295 are specified over the extended -40°C to +85°C temperature range, and are available in space-saving 4mm x 4mm, 16-pin thin QFN and 6.5mm x 5mm, 14-pin and 16-pin TSSOP packages.

Applications

Portable Instrumentation
Automatic Test Equipment (ATE)
Digital Offset and Gain Adjustment
Automatic Tuning
Programmable Voltage and Current Sources
Programmable Attenuators
Industrial Process Controls
Motion Control
Microprocessor (µP)-Controlled Systems
Power Amplifier Control
Fast Parallel-DAC to Serial-DAC Upgrades

Selector Guide and Pin Configurations appear at end of data sheet.

SPI/QSPI are trademarks of Motorola, Inc.
MICROWIRE is a trademark of National Semiconductor Corp.

Features

- **Dual, 12-/10-/8-Bit Serial DACs in 4mm x 4mm Thin QFN and TSSOP Packages**
- **3µs (max) 12-Bit Settling Time to 1/2 LSB**
- **Integral Nonlinearity**
  1 LSB (max) MAX5290/MAX5291 A-Grade (12-Bit)
  1 LSB (max) MAX5292/MAX5293 (10-Bit)
  1/2 LSB (max) MAX5294/MAX5295 (8-Bit)
- **Guaranteed Monotonic, ±1 LSB (max) DNL**
- **Two User-Programmable Digital I/O Ports**
- **Single +2.7V to +5.25V Analog Supply**
- **+1.8V to AV_{DD} Digital Supply**
- **20MHz 3-Wire SPI-/QSPI-/MICROWIRE- and DSP-Compatible Serial Interface**
- **Glitch-Free Outputs Power Up to Zero Scale, Midscale or Full Scale**
- **Unity-Gain- or Force-Sense-Configured Output Buffers**

Ordering Information

PART	TEMP RANGE	PIN-PACKAGE
MAX5290AEUD	-40°C to +85°C	14 TSSOP
MAX5290BEUD	-40°C to +85°C	14 TSSOP
MAX5290AETE*	-40°C to +85°C	16 Thin QFN-EP**
MAX5290BETE*	-40°C to +85°C	16 Thin QFN-EP**
MAX5291AEUE	-40°C to +85°C	16 TSSOP
MAX5291BEUE	-40°C to +85°C	16 TSSOP
MAX5291AETE*	-40°C to +85°C	16 Thin QFN-EP**
MAX5291BETE*	-40°C to +85°C	16 Thin QFN-EP**
MAX5292EUD	-40°C to +85°C	14 TSSOP
MAX5292ETE*	-40°C to +85°C	16 Thin QFN-EP**
MAX5293EUE	-40°C to +85°C	16 TSSOP
MAX5293ETE*	-40°C to +85°C	16 Thin QFN-EP**
MAX5294EUD	-40°C to +85°C	14 TSSOP
MAX5294ETE*	-40°C to +85°C	16 Thin QFN-EP**
MAX5295EUE	-40°C to +85°C	16 TSSOP
MAX5295ETE*	-40°C to +85°C	16 Thin QFN-EP**

**Future product—contact factory for availability. Specifications are preliminary.*

***EP = Exposed paddle.*

For pricing, delivery, and ordering information, please contact Maxim Direct at 1-888-629-4642, or visit Maxim's website at www.maxim-ic.com.

Buffered, Fast-Settling, Dual, 12-/10-/8-Bit, Voltage-Output DACs

ABSOLUTE MAXIMUM RATINGS

AV_{DD} to DV_{DD} ..... ±6V
AGND to DGND ..... ±0.3V
AV_{DD} to AGND, DGND ..... -0.3V to +6V
DV_{DD} to AGND, DGND ..... -0.3V to +6V
FB_, OUT_,
REF to AGND ..... -0.3V to the lower of (AV_{DD} + 0.3V) or +6V
SCLK, DIN, $\overline{CS}$, PU,
$\overline{DSP}$ to DGND ..... -0.3V to the lower of (DV_{DD} + 0.3V) or +6V
UPIO1, UPIO2
to DGND ..... -0.3V to the lower of (DV_{DD} + 0.3V) or +6V
Maximum Current into Any Pin ..... ±50mA
Continuous Power Dissipation (T_A = +70°C)
14-Pin TSSOP (derate 9.1mW/°C above +70°C) 727mW
16-Pin TSSOP (derate 9.4mW/°C above +70°C) 755mW
16-Pin Thin QFN (derate 16.9mW/°C above +70°C) . 1349mW
Operating Temperature Range ..... -40°C to +85°C
Storage Temperature Range ..... -65°C to +150°C
Maximum Junction Temperature ..... +150°C
Lead Temperature (soldering, 10s) ..... +300°C

Stresses beyond those listed under "Absolute Maximum Ratings" may cause permanent damage to the device. These are stress ratings only, and functional operation of the device at these or any other conditions beyond those indicated in the operational sections of the specifications is not implied. Exposure to absolute maximum rating conditions for extended periods may affect device reliability.

ELECTRICAL CHARACTERISTICS

(AV_{DD} = 2.7V to 5.25V, DV_{DD} = 1.8V to AV_{DD}, AGND = 0, DGND = 0, V_{REF} = 2.5V, R_L = 10kΩ, C_L = 100pF, T_A = T_{MIN} to T_{MAX}, unless otherwise noted. Typical values are at T_A = +25°C.) (Note 1)

PARAMETER	SYMBOL	CONDITIONS		MIN	TYP	MAX	UNITS
STATIC ACCURACY							
Resolution	N	MAX5290/MAX5291		12			Bits
		MAX5292/MAX5293		10			
		MAX5294/MAX5295		8			
Integral Nonlinearity	INL	V_{REF} = 2.5V at AV_{DD} = 2.7V, V_{REF} = 4.096V at AV_{DD} = 5.25V (Note 2)	MAX5290A/MAX5291A (12-bit)			±1	LSB
			MAX5290B/MAX5291B (12-bit)		±2	±4	
			MAX5292/MAX5293 (10-bit)		±0.5	±1	
			MAX5294/MAX5295 (8-bit)		±0.125	±0.5	
Differential Nonlinearity	DNL	Guaranteed monotonic (Note 2)				±1	LSB
Offset Error	V_{OS}	MAX5290A/MAX5291A (12-bit), decimal code = 40				±5	mV
		MAX5290B/MAX5291B (12-bit), decimal code = 82			±5	±25	
		MAX5292/MAX5293 (10-bit), decimal code = 21			±5	±25	
		MAX5294/MAX5295 (8-bit), decimal code = 5			±5	±25	
Offset-Error Drift					5		ppm of FS/°C
Gain Error	GE	Full-scale output	MAX5290A/MAX5291A (12-bit)			±4	LSB
			MAX5290B/MAX5291B (12-bit)		±10	±20	
			MAX5292/MAX5293 (10-bit)		±3	±5	
			MAX5294/MAX5295 (8-bit)		±0.5	±2	
Gain-Error Drift					1		ppm of FS/°C

ELECTRICAL CHARACTERISTICS (continued)

(AV_{DD} = 2.7V to 5.25V, DV_{DD} = 1.8V to AV_{DD}, AGND = 0, DGND = 0, V_{REF} = 2.5V, R_L = 10kΩ, C_L = 100pF, T_A = T_{MIN} to T_{MAX}, unless otherwise noted. Typical values are at T_A = +25°C.) (Note 1)

PARAMETER	SYMBOL	CONDITIONS		MIN	TYP	MAX	UNITS
Power-Supply Rejection Ratio	PSRR	Full-scale output, AV_{DD} = 2.7V to 3.6V			200		µV/V
REFERENCE INPUT							
Reference Input Range	V_{REF}			0.25		AV_{DD}	V
Reference Input Resistance	R_{REF}	Normal operation (no code dependence)		145	200		kΩ
Reference Leakage Current	I_{REF}	Shutdown mode			0.5	1	µA
DAC OUTPUT CHARACTERISTICS							
Output Voltage Noise		SLOW mode, full scale	Unity gain		85		$µV_{RMS}$
			Force sense		67		
		FAST mode, full scale	Unity gain		140		
			Force sense		110		
Output Voltage Range (Note 4)		Unity-gain output		0		AV_{DD}	V
		Force-sense output		0		AV_{DD} / 2	
DC Output Impedance					38		Ω
Short-Circuit Current		AV_{DD} = 3V, OUT_ to AGND, full scale, FAST mode			45		mA
Power-Up Time		From DV_{DD} applied, interface is functional			30	60	µs
Wake-Up Time		Coming out of shutdown, outputs settled			40		µs
Output OUT_ and FB_ Open-Circuit Leakage Current		Programmed in shutdown mode, force-sense outputs only			0.01		µA
DIGITAL OUTPUTS (UPIO_)							
Output High Voltage	V_{OH}	I_{SOURCE} = 2mA		DV_{DD} - 0.5			V
Output Low Voltage	V_{OL}	I_{SINK} = 2mA				0.4	V
DIGITAL INPUTS (SCLK, $\overline{CS}$, DIN, $\overline{DSP}$, UPIO_)							
Input High Voltage	V_{IH}	DV_{DD} ≥ 2.7V		2.4			V
		DV_{DD} < 2.7V		0.7 x DV_{DD}			
Input Low Voltage	V_{IL}	DV_{DD} > 3.6V				0.8	V
		2.7V ≤ DV_{DD} ≤ 3.6V				0.6	
		DV_{DD} < 2.7V				0.2	
Input Leakage Current	I_{IN}				±0.1	±1	µA
Input Capacitance	C_{IN}				10		pF

Buffered, Fast-Settling, Dual, 12-/10-/8-Bit, Voltage-Output DACs

ELECTRICAL CHARACTERISTICS (continued)

(AV_{DD} = 2.7V to 5.25V, DV_{DD} = 1.8V to AV_{DD}, AGND = 0, DGND = 0, V_{REF} = 2.5V, R_L = 10kΩ, C_L = 100pF, T_A = T_{MIN} to T_{MAX}, unless otherwise noted. Typical values are at T_A = +25°C.) (Note 1)

PARAMETER	SYMBOL	CONDITIONS		MIN	TYP	MAX	UNITS
PU INPUT							
Input High Voltage	V_{IH-PU}			DV_{DD} - 200mV			V
Input Low Voltage	V_{IL-PU}					200	mV
Input Leakage Current	I_{IN-PU}	PU still considered floating when connected to a tri-state bus				±200	nA
DYNAMIC PERFORMANCE							
Voltage-Output Slew Rate	SR	Fast mode			3.6		V/µs
		Slow mode			1.6		
Voltage-Output Settling Time (Note 5)		FAST mode	MAX5290/MAX5291 from code 322 to code 4095 to 1/2 LSB		2	3	µs
			MAX5292/MAX5293 from code 82 to code 1023 to 1/2 LSB		1.5	3	
			MAX5294/MAX5295 from code 21 to code 255 to 1/2 LSB		1	2	
		SLOW mode	MAX5290/MAX5291 from code 322 to code 4095 to 1/2 LSB		3	6	
			MAX5292/MAX5293 from code 82 to code 1023 to 1/2 LSB		2.5	6	
			MAX5294/MAX5295 from code 21 to code 255 to 1/2 LSB		2	4	
FB_ Input Voltage				0		V_{REF} / 2	V
FB_ Input Current						0.1	µA
Reference -3dB Bandwidth (Note 6)		Unity gain			200		kHz
		Force sense			150		
Digital Feedthrough		$\overline{CS}$ = DV_{DD}, code = zero scale, any digital input from 0 to DV_{DD} and DV_{DD} to 0, f = 100kHz			0.1		nV-s
Digital-to-Analog Glitch Impulse		Major carry transition			2		nV-s
DAC-to-DAC Crosstalk		(Note 3)			15		nV-s

ELECTRICAL CHARACTERISTICS (continued)

(AV_{DD} = 2.7V to 5.25V, DV_{DD} = 1.8V to AV_{DD}, AGND = 0, DGND = 0, V_{REF} = 2.5V, R_L = 10kΩ, C_L = 100pF, T_A = T_{MIN} to T_{MAX}, unless otherwise noted. Typical values are at T_A = +25°C.) (Note 1)

PARAMETER	SYMBOL	CONDITIONS		MIN	TYP	MAX	UNITS
POWER REQUIREMENTS							
Analog Supply Voltage Range	AV_{DD}			2.70		5.25	V
Digital Supply Voltage Range	DV_{DD}			1.8		AV_{DD}	V
Operating Supply Current	I_{AVDD} + I_{DVDD}	SLOW mode, all digital inputs at DGND or DV_{DD}, no load, V_{REF} = 2.5V	Unity gain		0.55	0.8	mA
			Force sense		0.9	1.2	mA
		FAST mode, all digital inputs at DGND or DV_{DD}, no load, V_{REF} = 2.5V	Unity gain		0.85	2	mA
			Force sense		1.2	2	
Shutdown Supply Current	$I_{AVDD(SHDN)}$ + $I_{DVDD(SHDN)}$	No clocks, all digital inputs at DGND or DV_{DD}, all DACs in shutdown mode			0.5	1.0	µA

TIMING CHARACTERISTICS—DSP Mode Disabled (3V, 3.3V Logic) (Figure 1)

(DV_{DD} = 2.7V to 5.25V, DGND = 0, T_A = T_{MIN} to T_{MAX}, unless otherwise noted.)

PARAMETER	SYMBOL	CONDITIONS	MIN	TYP	MAX	UNITS
SCLK Frequency	f_{SCLK}	2.7V < DV_{DD} < 5.25V			20	MHz
SCLK Pulse-Width High	t_{CH}	(Note 7)	20			ns
SCLK Pulse-Width Low	t_{CL}	(Note 7)	20			ns
$\overline{CS}$ Fall to SCLK Rise Setup Time	t_{CSS}		10			ns
SCLK Rise to $\overline{CS}$ Rise Hold Time	t_{CSH}		5			ns
SCLK Rise to $\overline{CS}$ Fall Setup Time	t_{CS0}		10			ns
DIN to SCLK Rise Setup Time	t_{DS}		12			ns
DIN to SCLK Rise Hold Time	t_{DH}		5			ns
SCLK Rise to DOUTDC1 Valid Propagation Delay	t_{DO1}	C_L = 20pF, UPIO_ = DOUTDC1 mode			30	ns
SCLK Fall to DOUT_ Valid Propagation Delay	t_{DO2}	C_L = 20pF, UPIO_ = DOUTDC0 or DOUTRB mode			30	ns
$\overline{CS}$ Rise to SCLK Rise Hold Time	t_{CS1}	MICROWIRE and SPI modes 0 and 3	10			ns
$\overline{CS}$ Pulse-Width High	t_{CSW}		45			ns

Buffered, Fast-Settling, Dual, 12-/10-/8-Bit, Voltage-Output DACs

TIMING CHARACTERISTICS—DSP Mode Disabled (3V, 3.3V Logic) (Figure 1) (continued)

(DV_{DD} = 2.7V to 5.25V, DGND = 0, T_A = T_{MIN} to T_{MAX}, unless otherwise noted.)

PARAMETER	SYMBOL	CONDITIONS	MIN	TYP	MAX	UNITS
UPIO TIMING CHARACTERISTICS						
DOUT Tri-State Time when Exiting DOUTDC0, DOUTDC1, or DOUTRB UPIO Modes	t_{DOZ}	C_L = 20pF, from end of write cycle to UPIO_ in high impedance			100	ns
DOUTRB Tri-State Time from $\overline{CS}$ Rise	t_{DRBZ}	C_L = 20pF, from rising edge of $\overline{CS}$ to UPIO_ in high impedance			20	ns
DOUTRB Tri-State Enable Time from 8th SCLK Rise	t_{ZEN}	C_L = 20pF, from 8th rising edge of SCLK to UPIO_ driven out of tri-state	0			ns
$\overline{LDAC}$ Pulse-Width Low	t_{LDL}	Figure 5	20			ns
$\overline{LDAC}$ Effective Delay	t_{LDS}	Figure 6	100			ns
$\overline{CLR}$, $\overline{MID}$, $\overline{SET}$ Pulse-Width Low	t_{CMS}	Figure 5	20			ns
GPO Output Settling Time	t_{GP}	Figure 6			100	ns
GPO Output High-Impedance Time	t_{GPZ}				100	ns

TIMING CHARACTERISTICS—DSP Mode Disabled (1.8V Logic) (Figure 1)

(DV_{DD} = 1.8V to 5.25V, DGND = 0, T_A = T_{MIN} to T_{MAX}, unless otherwise noted.)

PARAMETER	SYMBOL	CONDITIONS	MIN	TYP	MAX	UNITS
SCLK Frequency	f_{SCLK}	1.8V < DV_{DD} < 5.25V			10	MHz
SCLK Pulse-Width High	t_{CH}	(Note 7)	40			ns
SCLK Pulse-Width Low	t_{CL}	(Note 7)	40			ns
$\overline{CS}$ Fall to SCLK Rise Setup Time	t_{CSS}		20			ns
SCLK Rise to $\overline{CS}$ Rise Hold Time	t_{CSH}		0			ns
SCLK Rise to $\overline{CS}$ Fall Setup Time	t_{CS0}		10			ns
DIN to SCLK Rise Setup Time	t_{DS}		20			ns
DIN to SCLK Rise Hold Time	t_{DH}		5			ns
SCLK Rise to DOUTDC1 Valid Propagation Delay	t_{DO1}	C_L = 20pF, UPIO_ = DOUTDC1 mode			60	ns
SCLK Fall to DOUT_ Valid Propagation Delay	t_{DO2}	C_L = 20pF, UPIO_ = DOUTDC0 or DOUTRB mode			60	ns
$\overline{CS}$ Rise to SCLK Rise Hold Time	t_{CS1}	MICROWIRE and SPI modes 0 and 3	20			ns
$\overline{CS}$ Pulse-Width High	t_{CSW}		90			ns

TIMING CHARACTERISTICS—DSP Mode Disabled (1.8V Logic) (Figure 1) (continued)

(DV_{DD} = 1.8V to 5.25V, DGND = 0, T_A = T_{MIN} to T_{MAX}, unless otherwise noted.)

PARAMETER	SYMBOL	CONDITIONS	MIN	TYP	MAX	UNITS
UPIO_ TIMING CHARACTERISTICS						
DOUT Tri-State Time when Exiting DOUTDC0, DOUTDC1, or DOUTRB UPIO Modes	t_{DOZ}	C_L = 20pF, from end of write cycle to UPIO_ in high impedance			200	ns
DOUTRB Tri-State Time from $\overline{CS}$ Rise	t_{DRBZ}	C_L = 20pF, from rising edge of $\overline{CS}$ to UPIO_ in high impedance			40	ns
DOUTRB Tri-State Enable Time from 8th SCLK Rise	t_{ZEN}	C_L = 20pF, from 8th rising edge of SCLK to UPIO_ driven out of tri-state	0			ns
$\overline{LDAC}$ Pulse-Width Low	t_{LDL}	Figure 5	40			ns
$\overline{LDAC}$ Effective Delay	t_{LDS}	Figure 6	200			ns
$\overline{CLR}$, $\overline{MID}$, $\overline{SET}$ Pulse-Width Low	t_{CMS}	Figure 5	40			ns
GPO Output Settling Time	t_{GP}	Figure 6			200	ns
GPO Output High-Impedance Time	t_{GPZ}				200	ns

TIMING CHARACTERISTICS—DSP Mode Enabled (3V, 3.3V Logic) (Figure 2)

(DV_{DD} = 2.7V to 5.25V, DGND = 0, T_A = T_{MIN} to T_{MAX}, unless otherwise noted.)

PARAMETER	SYMBOL	CONDITIONS	MIN	TYP	MAX	UNITS
SCLK Frequency	f_{SCLK}	2.7V < DV_{DD} < 5.25V			20	MHz
SCLK Pulse-Width High	t_{CH}	(Note 7)	20			ns
SCLK Pulse-Width Low	t_{CL}	(Note 7)	20			ns
$\overline{CS}$ Fall to SCLK Fall Setup Time	t_{CSS}		10			ns
$\overline{DSP}$ Fall to SCLK Fall Setup Time	t_{DSS}		10			ns
SCLK Fall to $\overline{CS}$ Rise Hold Time	t_{CSH}		5			ns
SCLK Fall to $\overline{CS}$ Fall Delay	t_{CS0}		10			ns
SCLK Fall to $\overline{DSP}$ Fall Delay	t_{DS0}		10			ns
DIN to SCLK Fall Setup Time	t_{DS}		12			ns
DIN to SCLK Fall Hold Time	t_{DH}		5			ns
SCLK Rise to DOUT_ Valid Propagation Delay	t_{DO1}	C_L = 20pF, UPIO_ = DOUTDC1 or DOUTRB mode			30	ns
SCLK Fall to DOUTDC0 Valid Propagation Delay	t_{DO2}	C_L = 20pF, UPIO_ = DOUTDC0 mode			30	ns
$\overline{CS}$ Rise to SCLK Fall Hold Time	t_{CS1}	MICROWIRE and SPI modes 0 and 3	10			ns
$\overline{CS}$ Pulse-Width High	t_{CSW}		45			ns
$\overline{DSP}$ Pulse-Width High	t_{DSW}		20			ns
$\overline{DSP}$ Pulse-Width Low	t_{DSPWL}	(Note 8)	20			ns

Buffered, Fast-Settling, Dual, 12-/10-/8-Bit, Voltage-Output DACs

TIMING CHARACTERISTICS—DSP Mode Enabled (3V, 3.3V Logic) (Figure 2) (continued)

(DV_{DD} = 2.7V to 5.25V, DGND = 0, T_A = T_{MIN} to T_{MAX}, unless otherwise noted.)

PARAMETER	SYMBOL	CONDITIONS	MIN	TYP	MAX	UNITS
UPIO_ TIMING CHARACTERISTICS						
DOUT Tri-State Time when Exiting DOUTDC0, DOUTDC1, or DOUTRB UPIO Modes	t_{DOZ}	C_L = 20pF, from end of write cycle to UPIO_ in high impedance			100	ns
DOUTRB Tri-State Time from $\overline{CS}$ Rise	t_{DRBZ}	C_L = 20pF, from rising edge of $\overline{CS}$ to UPIO_ in high impedance			20	ns
DOUTRB Tri-State Enable Time from 8th SCLK Fall	t_{ZEN}	C_L = 20pF, from 8th falling edge of SCLK to UPIO_ driven out of tri-state	0			ns
$\overline{LDAC}$ Pulse-Width Low	t_{LDL}	Figure 5	20			ns
$\overline{LDAC}$ Effective Delay	t_{LDS}	Figure 6	100			ns
$\overline{CLR}$, $\overline{MID}$, $\overline{SET}$ Pulse-Width Low	t_{CMS}	Figure 5	20			ns
GPO Output Settling Time	t_{GP}	Figure 6			100	ns
GPO Output High-Impedance Time	t_{GPZ}				100	ns

TIMING CHARACTERISTICS—DSP Mode Enabled (1.8V Logic) (Figure 2)

(DV_{DD} = 1.8V to 5.25V, DGND = 0, T_A = T_{MIN} to T_{MAX}, unless otherwise noted.)

PARAMETER	SYMBOL	CONDITIONS	MIN	TYP	MAX	UNITS
SCLK Frequency	f_{SCLK}	1.8V < DV_{DD} < 5.25V			10	MHz
SCLK Pulse-Width High	t_{CH}	(Note 7)	40			ns
SCLK Pulse-Width Low	t_{CL}	(Note 7)	40			ns
$\overline{CS}$ Fall to SCLK Fall Setup Time	t_{CSS}		20			ns
$\overline{DSP}$ Fall to SCLK Fall Setup Time	t_{DSS}		20			ns
SCLK Fall to $\overline{CS}$ Rise Hold Time	t_{CSH}		0			ns
SCLK Fall to $\overline{CS}$ Fall Delay	t_{CS0}		10			ns
SCLK Fall to $\overline{DSP}$ Fall Delay	t_{DS0}		15			ns
DIN to SCLK Fall Setup Time	t_{DS}		20			ns
DIN to SCLK Fall Hold Time	t_{DH}		5			ns
SCLK Rise to DOUT_ Valid Propagation Delay	t_{DO1}	C_L = 20pF, UPIO_ = DOUTDC1 or DOUTRB mode			60	ns
SCLK Fall to DOUTDC0 Valid Propagation Delay	t_{DO2}	C_L = 20pF, UPIO_ = DOUTDC0 mode			60	ns
$\overline{CS}$ Rise to SCLK Fall Hold Time	t_{CS1}	MICROWIRE and SPI modes 0 and 3	20			ns
$\overline{CS}$ Pulse-Width High	t_{CSW}		90			ns
$\overline{DSP}$ Pulse-Width High	t_{DSW}		40			ns
$\overline{DSP}$ Pulse-Width Low	t_{DSPWL}	(Note 8)	40			ns

TIMING CHARACTERISTICS—DSP Mode Enabled (1.8V Logic) (Figure 2) (continued)

(DV_{DD} = 1.8V to 5.25V, DGND = 0, T_A = T_{MIN} to T_{MAX}, unless otherwise noted.)

PARAMETER	SYMBOL	CONDITIONS	MIN	TYP	MAX	UNITS
UPIO_ TIMING CHARACTERISTICS						
DOUT Tri-State Time when Exiting DOUTDC0, DOUTDC1, or DOUTRB UPIO_ Modes	t_{DOZ}	C_L = 20pF, from end of write cycle to UPIO_ in high impedance			200	ns
DOUTRB Tri-State Time from $\overline{CS}$ Rise	t_{DRBZ}	C_L = 20pF, from rising edge of $\overline{CS}$ to UPIO_ in high impedance			40	ns
DOUTRB Tri-State Enable Time from 8th SCLK Fall	t_{ZEN}	C_L = 20pF, from 8th falling edge of SCLK to UPIO_ driven out of tri-state	0			ns
$\overline{LDAC}$ Pulse-Width Low	t_{LDL}	Figure 5	40			ns
$\overline{LDAC}$ Effective Delay	t_{LDS}	Figure 6	200			ns
$\overline{CLR}$, $\overline{MID}$, $\overline{SET}$ Pulse-Width Low	t_{CMS}	Figure 5	40			ns
GPO Output Settling Time	t_{GP}	Figure 6			200	ns
GPO Output High-Impedance Time	t_{GPZ}				200	ns

Note 1: For the force-sense versions, FB_ is connected to its respective OUT_. V_{OUT}(max) = V_{REF} / 2, unless otherwise noted.

Note 2: Linearity guaranteed from decimal code 40 to 4095 for the MAX5290A/MAX5291A (12-bit, A-grade), code 82 to 4095 for the MAX5290B/MAX5291B (12-bit, B-grade), code 21 to 1023 for the MAX5292/MAX5293 (10-bit), and code 5 to 255 for the MAX5294/MAX5295 (8-bit).

Note 3: DAC-to-DAC crosstalk is measured as follows: outputs of DACA and DACB are set to full scale and the output of DACB is measured. While keeping DACB unchanged, the output of DACA is transitioned to zero scale and the ΔV_{OUT} of DACB is measured. The procedure is repeated with DACA and DACB interchanged. DAC-to-DAC crosstalk is the maximum ΔV_{OUT} measured.

Note 4: Represents the functional range. The linearity is guaranteed at V_{REF} = 2.5V. See the *Typical Operating Characteristics* section for linearity at other voltages.

Note 5: Guaranteed by design.

Note 6: The reference -3dB bandwidth is measured with a 0.1V_{P-P} sine wave on V_{REF} and with the input code at full scale.

Note 7: In some daisy-chain modes, data is required to be clocked in on one clock edge and the shifted data clocked out on the following edge. In the case of a 1/2 clock-period delay, it is necessary to increase the minimum high/low clock times to 25ns (2.7V) or 50ns (1.8V).

Note 8: The falling edge of $\overline{DSP}$ starts a DSP-type bus cycle, provided that $\overline{CS}$ is also active low to select the device. $\overline{DSP}$ active low and $\overline{CS}$ active low must overlap by a minimum of 10ns (2.7V) or 20ns (1.8V). $\overline{CS}$ can be permanently low in this mode of

Buffered, Fast-Settling, Dual, 12-/10-/8-Bit, Voltage-Output DACs

Typical Operating Characteristics

(AV_{DD} = DV_{DD} = 3V, V_{REF} = 2.5V, R_L = 10kΩ, C_L = 100pF, speed mode = FAST, PU = floating, T_A = +25°C, unless otherwise noted.)

INTEGRAL NONLINEARITY vs. DIGITAL INPUT CODE (MAX5290A)

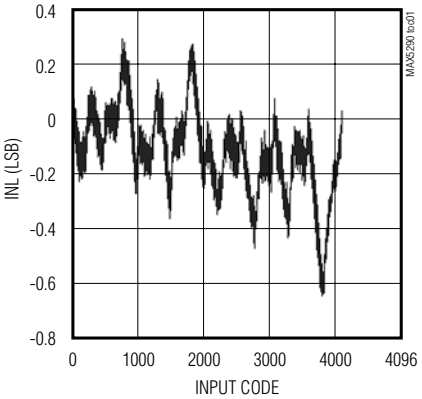

INTEGRAL NONLINEARITY vs. DIGITAL INPUT CODE (MAX5291A)

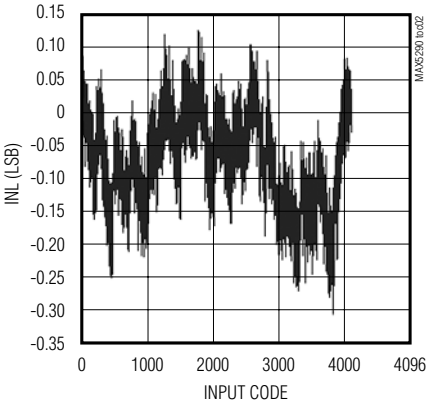

INTEGRAL NONLINEARITY vs. DIGITAL INPUT CODE (12-BIT)

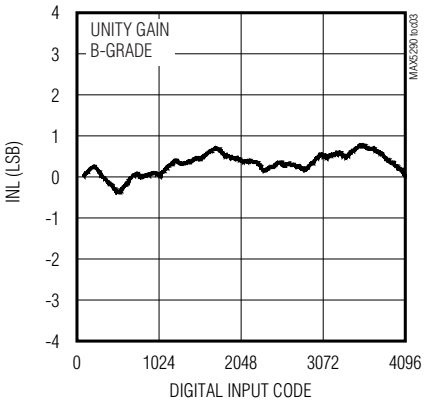

INTEGRAL NONLINEARITY vs. DIGITAL INPUT CODE (10-BIT)

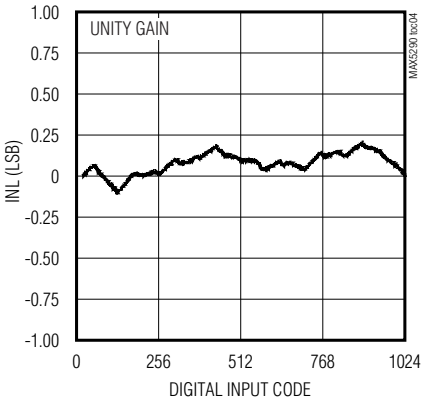

INTEGRAL NONLINEARITY vs. DIGITAL INPUT CODE (8-BIT)

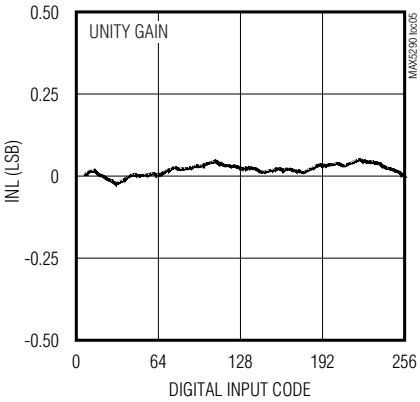

DIFFERENTIAL NONLINEARITY vs. DIGITAL INPUT CODE (12-BIT)

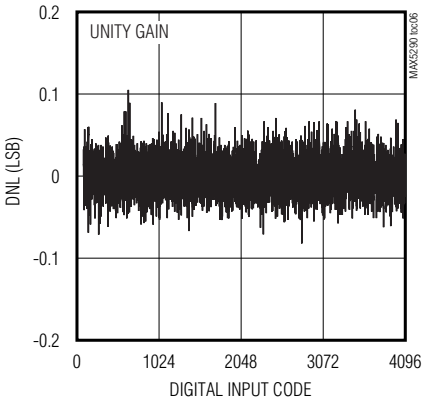

DIFFERENTIAL NONLINEARITY vs. DIGITAL INPUT CODE (10-BIT)

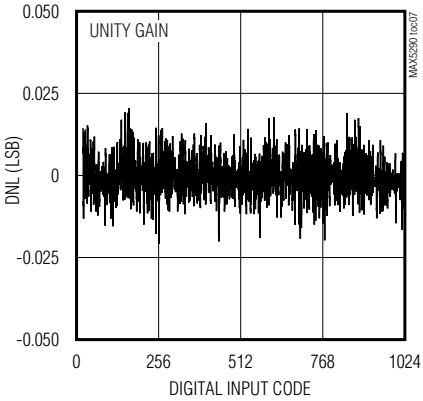

DIFFERENTIAL NONLINEARITY vs. DIGITAL INPUT CODE (8-BIT)

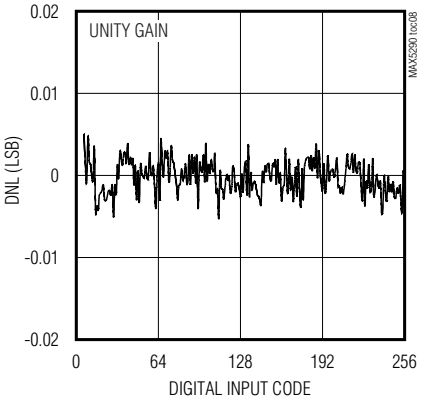

INTEGRAL NONLINEARITY vs. TEMPERATURE (A-GRADE)

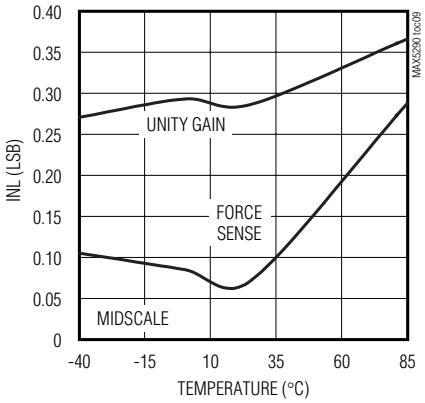

Typical Operating Characteristics (continued)

(AV_{DD} = DV_{DD} = 3V, V_{REF} = 2.5V, R_L = 10kΩ, C_L = 100pF, speed mode = FAST, PU = floating, T_A = +25°C, unless otherwise noted.)

INTEGRAL NONLINEARITY vs. TEMPERATURE (12-BIT)

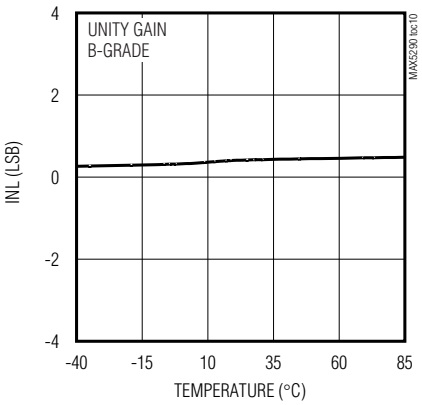

DIFFERENTIAL NONLINEARITY vs. TEMPERATURE (12-BIT)

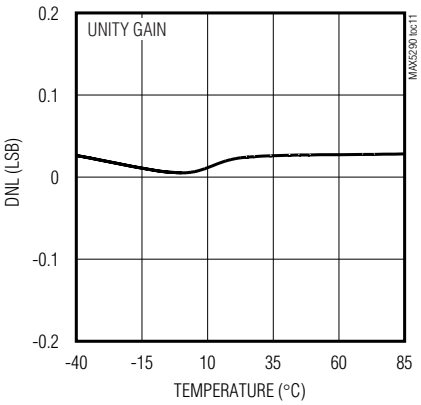

INTEGRAL NONLINEARITY vs. REFERENCE VOLTAGE (MAX5290A)

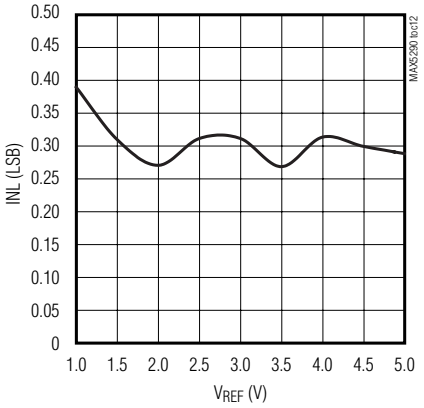

INTEGRAL NONLINEARITY vs. REFERENCE VOLTAGE (MAX5291A)

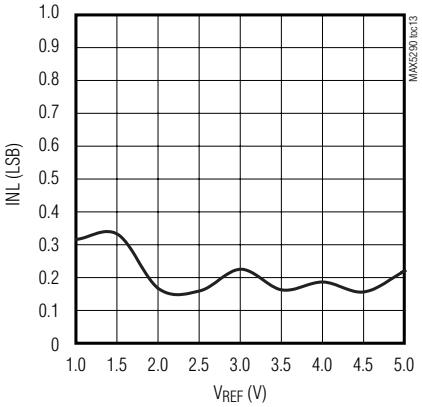

OFFSET ERROR vs. TEMPERATURE (A-GRADE)

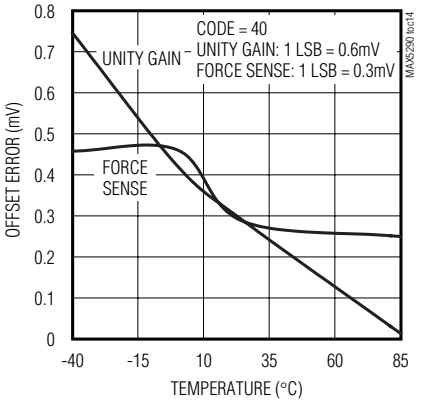

OFFSET ERROR vs. TEMPERATURE

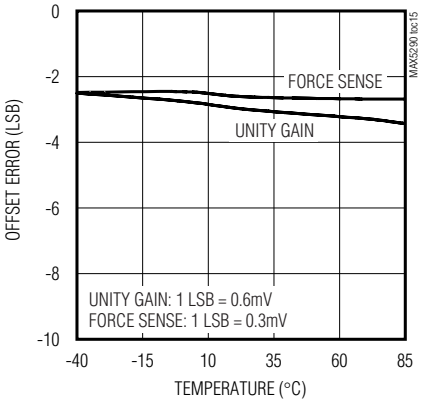

GAIN ERROR vs. TEMPERATURE (A-GRADE)

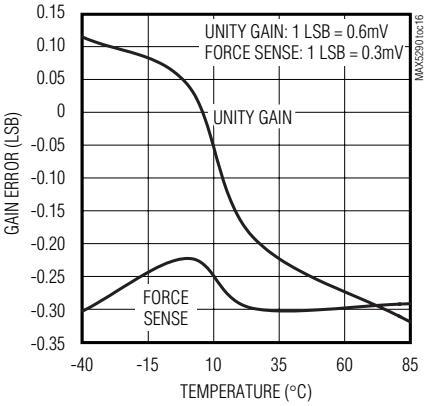

GAIN ERROR vs. TEMPERATURE

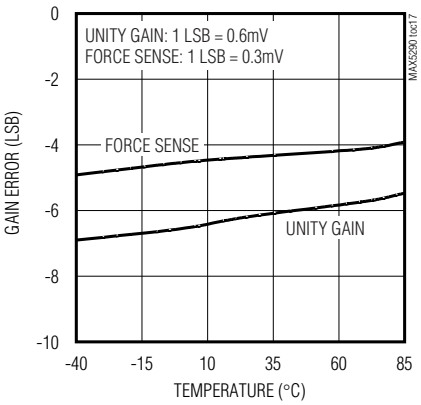

REFERENCE INPUT BANDWIDTH

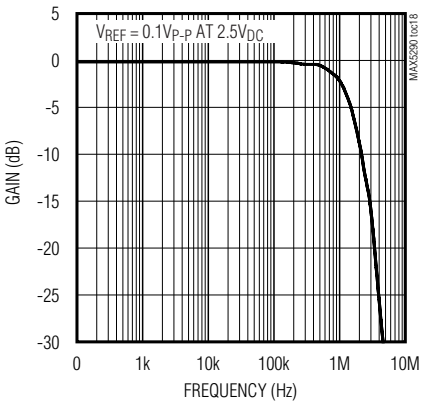

Buffered, Fast-Settling, Dual, 12-/10-/8-Bit, Voltage-Output DACs

Typical Operating Characteristics

(T_A = +25°C, unless otherwise noted.)

SUPPLY CURRENT vs. DIGITAL INPUT CODE (FORCE SENSE)

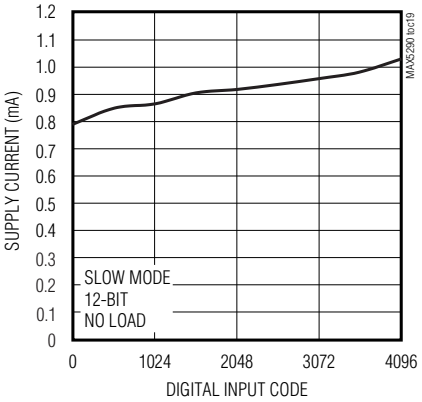

SUPPLY CURRENT vs. DIGITAL INPUT CODE (UNITY GAIN)

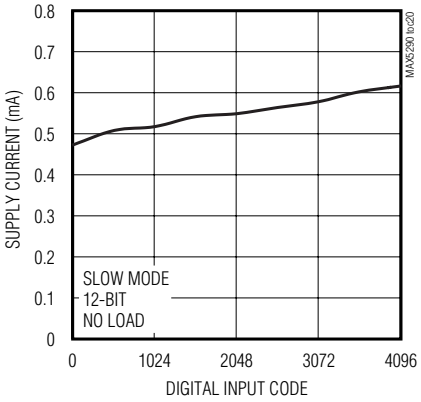

SUPPLY CURRENT vs. SUPPLY VOLTAGE (FORCE SENSE)

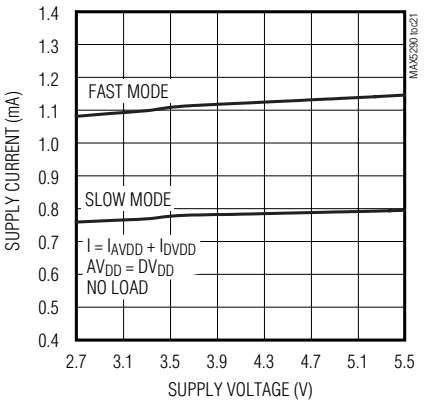

SUPPLY CURRENT vs. SUPPLY VOLTAGE (UNITY GAIN)

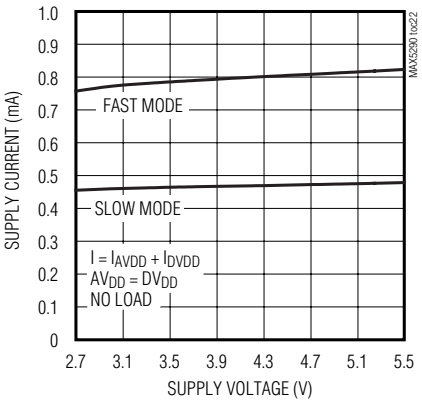

SHUTDOWN SUPPLY CURRENT vs. SUPPLY VOLTAGE

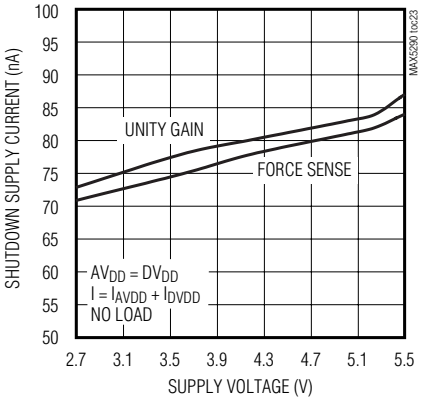

OFFSET ERROR vs. TEMPERATURE

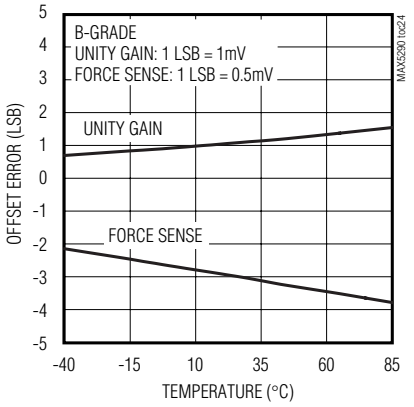

GAIN ERROR vs. TEMPERATURE

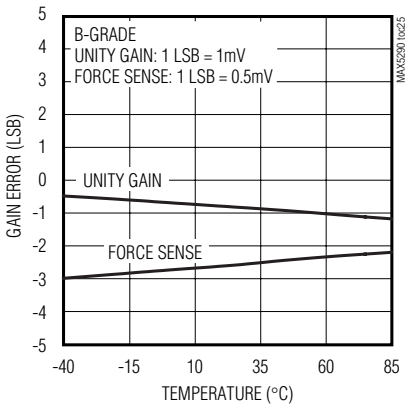

OUTPUT VOLTAGE vs. OUTPUT SOURCE/SINK CURRENT

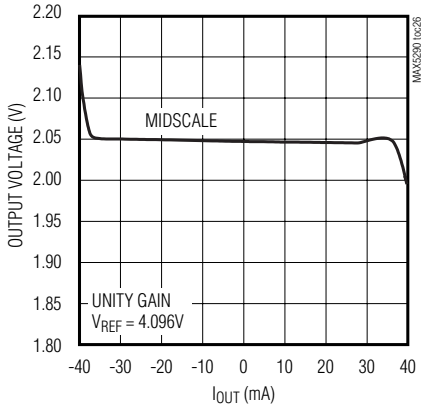

MAJOR-CARRY TRANSITION GLITCH

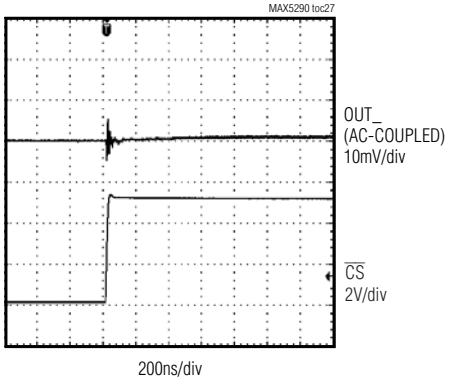

Typical Operating Characteristics

(T_A = +25°C, unless otherwise noted.)

SETTLING TIME POSITIVE

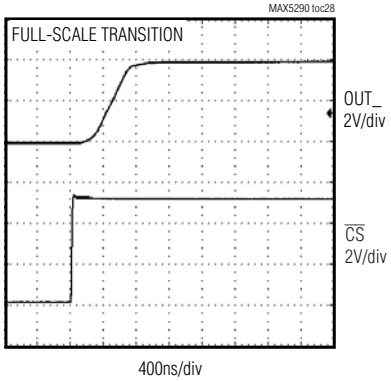

SETTLING TIME NEGATIVE

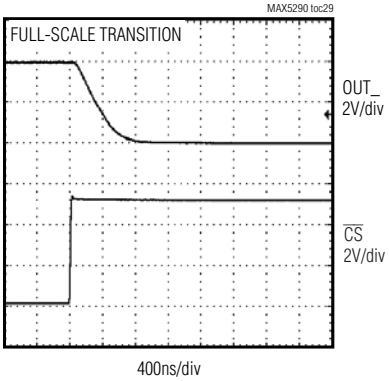

REFERENCE INPUT BANDWIDTH

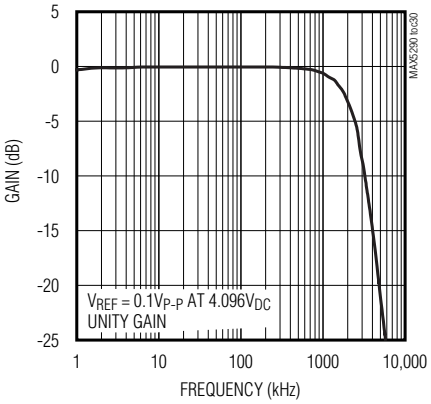

REFERENCE FEEDTHROUGH AT 1kHz

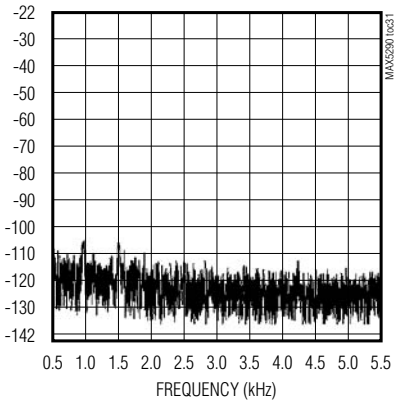

DAC-TO-DAC CROSSTALK

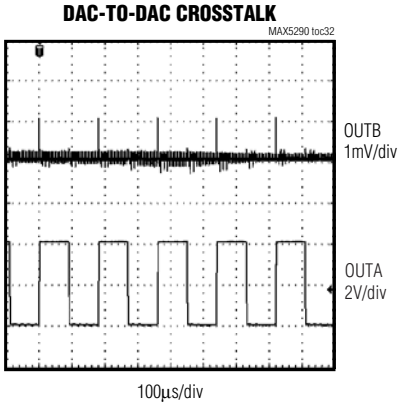

DIGITAL FEEDTHROUGH

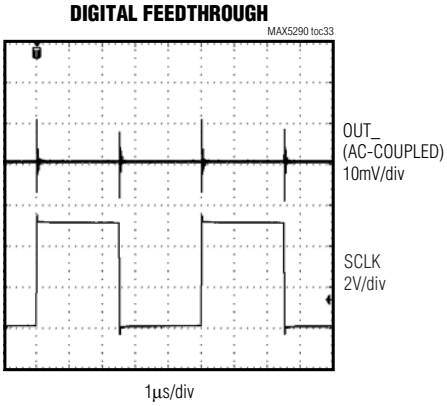

POWER-UP GLITCH

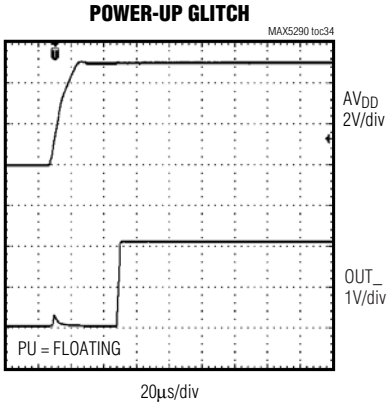

EXITING SHUTDOWN TO MIDSCALE

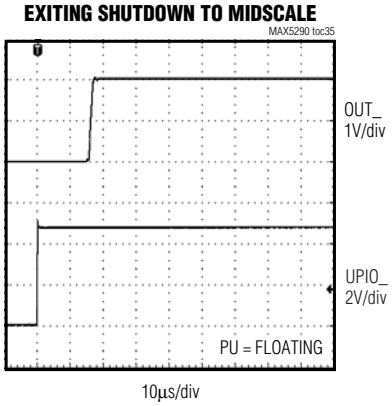

Buffered, Fast-Settling, Dual, 12-/10-/8-Bit, Voltage-Output DACs

Pin Description

PIN				NAME	FUNCTION
MAX5290 MAX5292 MAX5294		MAX5291 MAX5293 MAX5295			
THIN QFN	TSSOP	THIN QFN	TSSOP		
1	2	1	3	$\overline{DSP}$	Clock Enable. Connect $\overline{DSP}$ to DV_{DD} at power-up to transfer data on the rising edge of SCLK. Connect $\overline{DSP}$ to DGND at power-up to transfer data on the falling edge of SCLK.
2	3	2	4	DIN	Serial Data Input
3	4	3	5	$\overline{CS}$	Active-Low Chip-Select Input
4	5	4	6	SCLK	Serial Clock Input
5	6	5	7	DV_{DD}	Digital Supply
6	7	6	8	DGND	Digital Ground
7	8	7	9	AGND	Analog Ground
8	9	8	10	AV_{DD}	Analog Supply
9	10	9	11	OUTB	DACB Output
—	—	10	12	FBB	Feedback for DACB Output Buffer
10	11	11	13	REF	Reference Input
—	—	12	14	FBA	Feedback for DACA Output Buffer
11, 13	—	—	—	N.C.	No Connection. Not internally connected.
12	12	13	15	OUTA	DACA Output
14	13	14	16	PU	Power-Up State Select Input. Connect PU to DV_{DD} to set OUTA and OUTB to full scale upon power-up. Connect PU to DGND to set OUTA and OUTB to zero upon power-up. Leave PU floating to set OUTA and OUTB to midscale upon power-up.
15	14	15	1	UPIO2	User-Programmable Input/Output 2
16	1	16	2	UPIO1	User-Programmable Input/Output 1
—	—	—	—	EP	Exposed Paddle (QFN Only). Not internally connected. Do not connect to circuitry.

Functional Diagrams

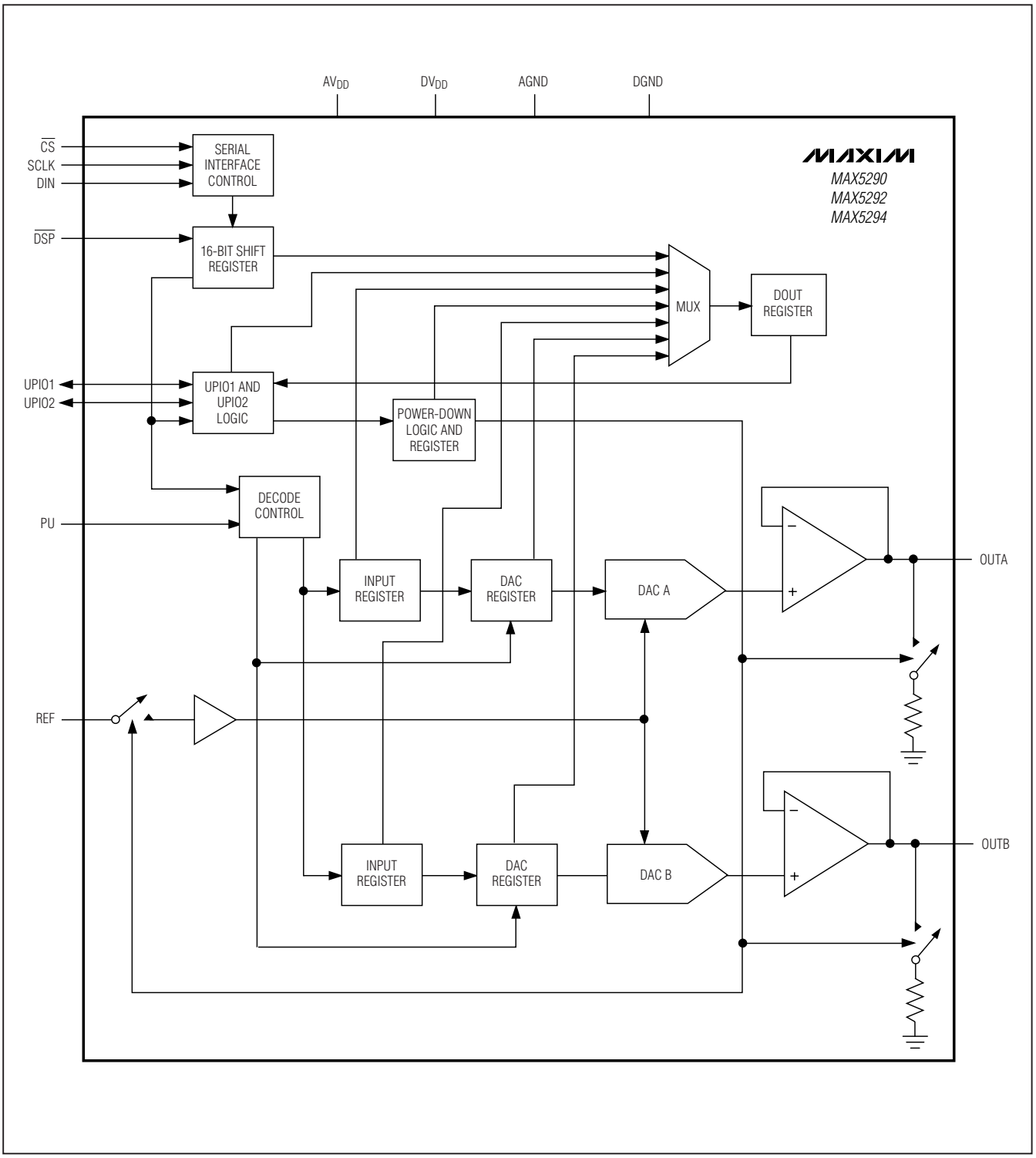

Buffered, Fast-Settling, Dual, 12-/10-/8-Bit, Voltage-Output DACs

Functional Diagrams (continued)

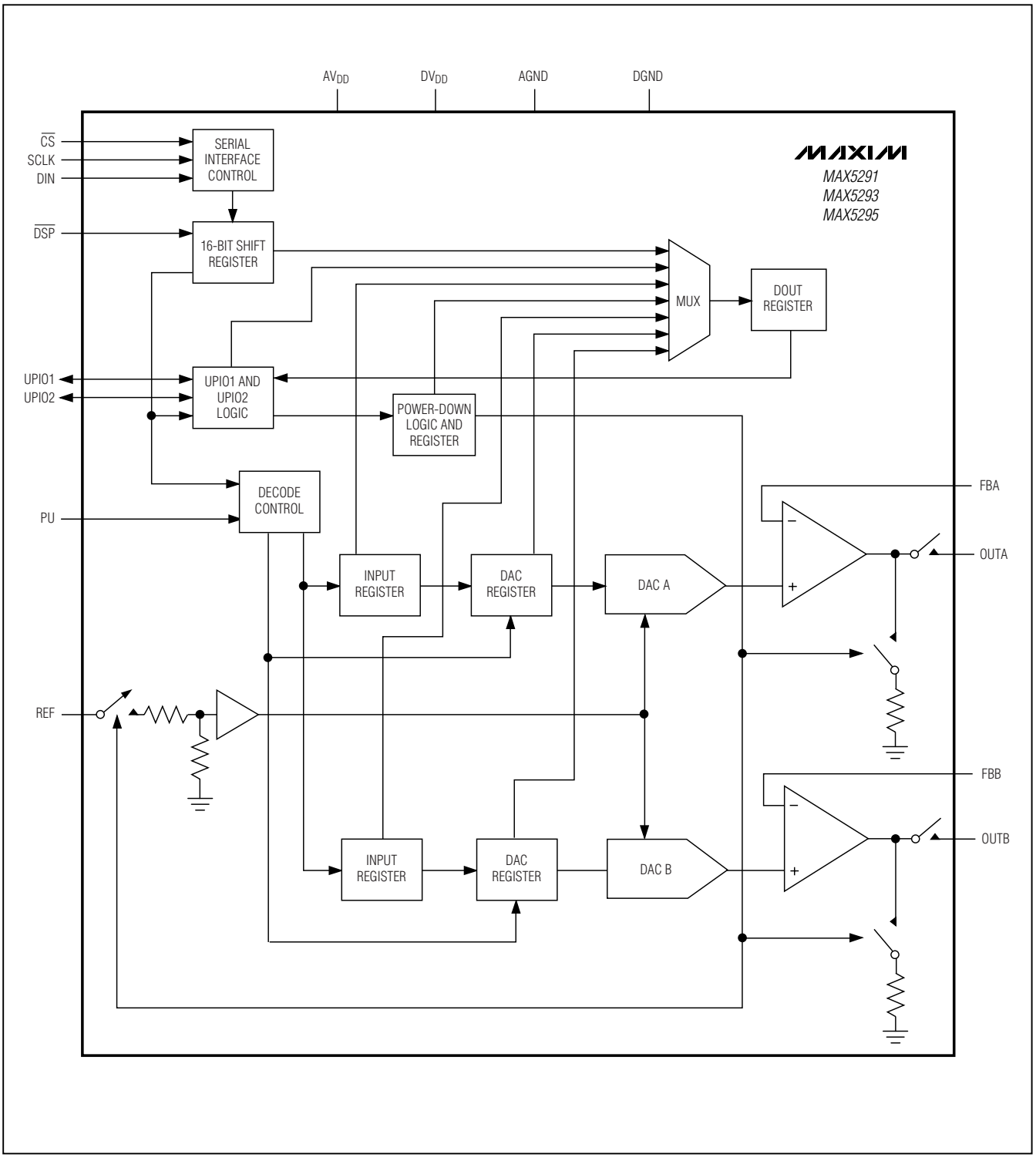

Detailed Description

The MAX5290–MAX5295 dual, 12-/10-/8-bit, voltage-output digital-to-analog converters (DACs) offer buffered outputs and a 3µs maximum settling time at the 12-bit level. The DACs operate from a single 2.7V to 5.25V analog supply and a separate 1.8V to AV_{DD} digital supply. The MAX5290–MAX5295 include an input register and DAC register for each channel and a 16-bit data-in/data-out shift register. The 3-wire serial interface is compatible with SPI, QSPI, MICROWIRE, and DSP applications. The MAX5290–MAX5295 provide two user-programmable digital I/O ports, which are programmed through the serial interface. The externally selectable power-up states of the DAC outputs are either zero scale, midscale, or full scale.

Reference Input

The reference input, REF, accepts both AC and DC values with a voltage range extending from 0.25V to AV_{DD}. The voltage at REF (V_{REF}) sets the full-scale output of the DACs. Determine the output voltage using the following equation:

Unity-gain versions:

$$V_{OUT_} = (V_{REF} \times CODE) / 2^N$$

Force-sense versions (FB_ connected to OUT_):

$$V_{OUT} = 0.5 \times (V_{REF} \times CODE) / 2^N$$

where CODE is the numeric value of the DAC's binary input code and N is the bits of resolution. For the MAX5290/MAX5291, N = 12 and CODE ranges from 0 to 4095. For the MAX5292/MAX5293, N = 10 and CODE ranges from 0 to 1023. For the MAX5294/MAX5295, N = 8 and CODE ranges from 0 to 255.

Output Buffers

The DACA and DACB output-buffer amplifiers of the MAX5290–MAX5295 are unity-gain stable with rail-to-rail output voltage swings and a typical slew rate of 5.7V/µs. The MAX5290/MAX5292/MAX5294 provide unity-gain outputs, while the MAX5291/MAX5293/MAX5295 provide force-sense outputs. For the MAX5291/MAX5293/MAX5295, access to the output amplifier's inverting input provides flexibility in output gain setting and signal conditioning (see the *Applications Information* section).

The MAX5290–MAX5295 offer FAST and SLOW-settling time modes. In the FAST mode, the settling time is 3µs (max), and the supply current is 2mA (max). In the SLOW mode, the settling time is 6µs (max), and the supply current drops to 0.8mA (max). See the *Digital Interface* section for settling-time mode programming details.

Use the serial interface to set the shutdown output impedance of the amplifiers to 1kΩ or 100kΩ for the MAX5290/MAX5292/MAX5294 and 1kΩ or high impedance for the MAX5291/MAX5293/MAX5295. The DAC outputs can drive a 2kΩ (typ) load and are stable with up to 500pF (typ) of capacitive load.

Power-On Reset

At power-up, all DAC outputs power up to full scale, midscale, or zero scale, depending on the configuration of the PU input. Connect PU to DV_{DD} to set OUT_ to full scale upon power-up. Connect PU to DGND to set OUT_ to zero scale upon power-up. Leave PU floating to set OUT_ to midscale.

Digital Interface

The MAX5290–MAX5295 use a 3-wire serial interface that is compatible with SPI, QSPI, MICROWIRE, and DSPs (Figures 1 and 2). Connect $\overline{DSP}$ to DV_{DD} before power-up to clock data in on the rising edge of SCLK. Connect $\overline{DSP}$ to DGND before power-up to clock data in on the falling edge of SCLK. After power-up, the device enters DSP frame sync mode on the first rising edge of $\overline{DSP}$. Refer to the *Programmer's Handbook* for details.

Each MAX5290–MAX5295 includes a 16-bit input shift register. The data is loaded into the input shift register through the serial interface. The 16 bits can be sent in two serial 8-bit packets or one 16-bit word ($\overline{CS}$ must remain low until all 16 bits are transferred). The data is loaded MSB first. For the MAX5290/MAX5291, the 16 bits consist of 4 control bits (C3–C0) and 12 data bits (D11–D0) (see Table 1). For the 10-bit MAX5292/MAX5293 devices, D11–D2 are the data bits and D1 and D0 are sub-bits. For the 8-bit MAX5294/MAX5295 devices, D11–D4 are the data bits and D3–D0 are sub-bits. Set all sub-bits to zero for optimum performance.

Each DAC channel includes two registers: an input register and the DAC register. At power-up, the DAC output is set according to the state of PU. The DACs are double-buffered, which allows any of the following for each channel:

- Loading the input register without updating the DAC register
- Loading the DAC register without updating the input register
- Updating the DAC register from the input register
- Updating the input and DAC registers simultaneously

Buffered, Fast-Settling, Dual, 12-/10-/8-Bit, Voltage-Output DACs

Table 1. Serial Write Data Format

MSB				16 BITS OF SERIAL DATA											LSB
CONTROL BITS				DATA BITS											
C3	C2	C1	C0	D11	D10	D9	D8	D7	D6	D5	D4	D3	D2	D1	D0

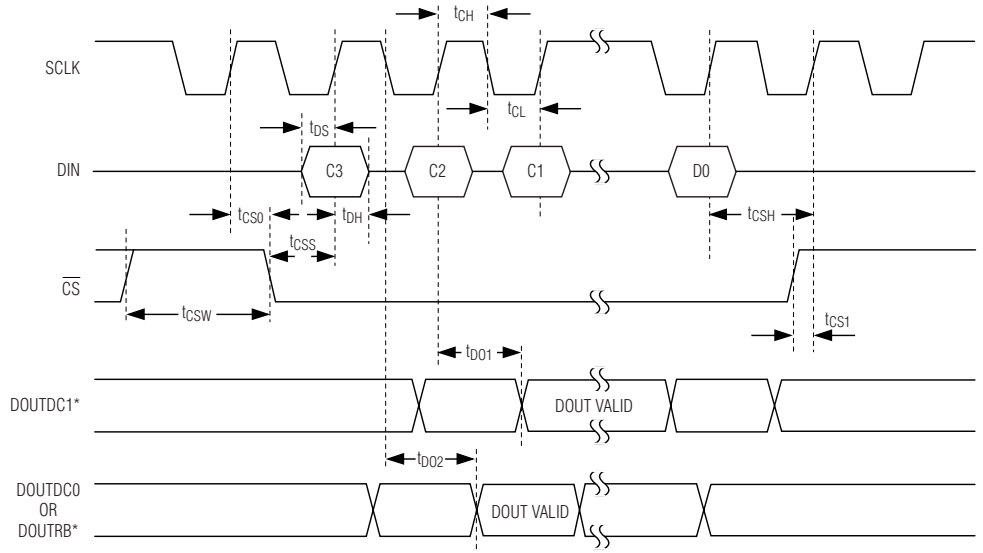

*UPIO1/UPIO2 CONFIGURED AS DOUTDC_ (DAISY-CHAIN DATA OUTPUT, MODE 0 OR 1) OR DOUTRB (READ-BACK DATA OUTPUT). SEE THE *DATA OUTPUT* SECTION FOR DETAILS.

Figure 1. Serial-Interface Timing Diagram (DSP Mode Disabled)

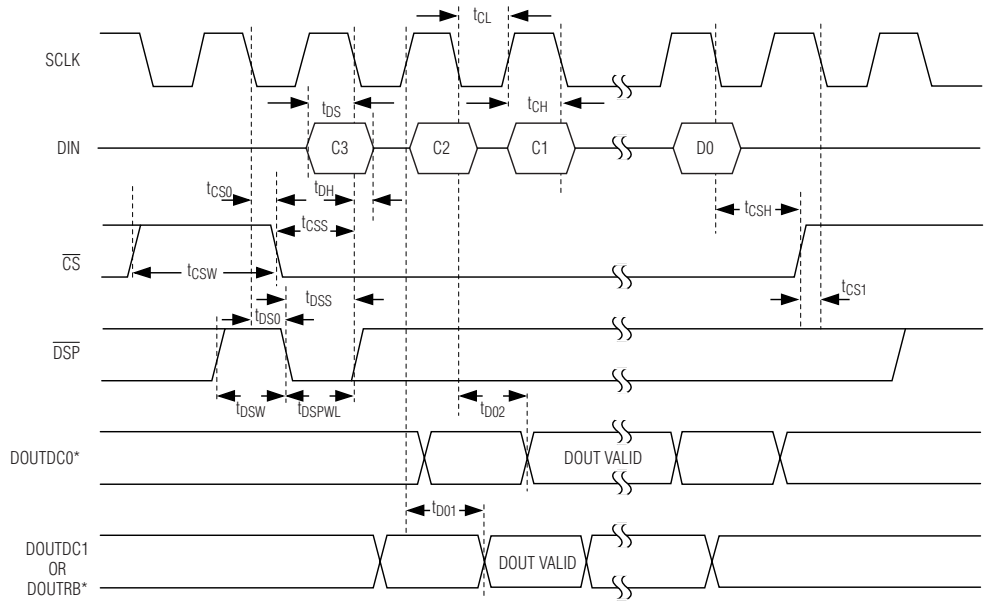

*UPIO1/UPIO2 CONFIGURED AS DOUTDC_ (DAISY-CHAIN DATA OUTPUT, MODE 0 OR 1) OR DOUTRB (READ-BACK DATA OUTPUT). SEE THE *DATA OUTPUT* SECTION FOR DETAILS.

Figure 2. Serial-Interface Timing Diagram (DSP Mode Enabled)

Serial-Interface Programming Commands

Tables 2a, 2b, and 2c provide all of the serial-interface programming commands for the MAX5290–MAX5295. Table 2a shows the basic DAC programming commands, Table 2b gives the advanced-feature programming commands, and Table 2c provides the 24-bit read commands. Figures 3 and 4 illustrate the serial-interface diagrams for read and write operations.

Loading Input and DAC Registers

The MAX5290–MAX5295 contain a 16-bit shift register that is followed by a 12-bit input register and a 12-bit DAC register for each channel (see the *Functional Diagrams*). Tables 3, 4, and 5 highlight a few of the commands for the loading of the input and DAC registers. See Table 2a for all DAC programming commands.

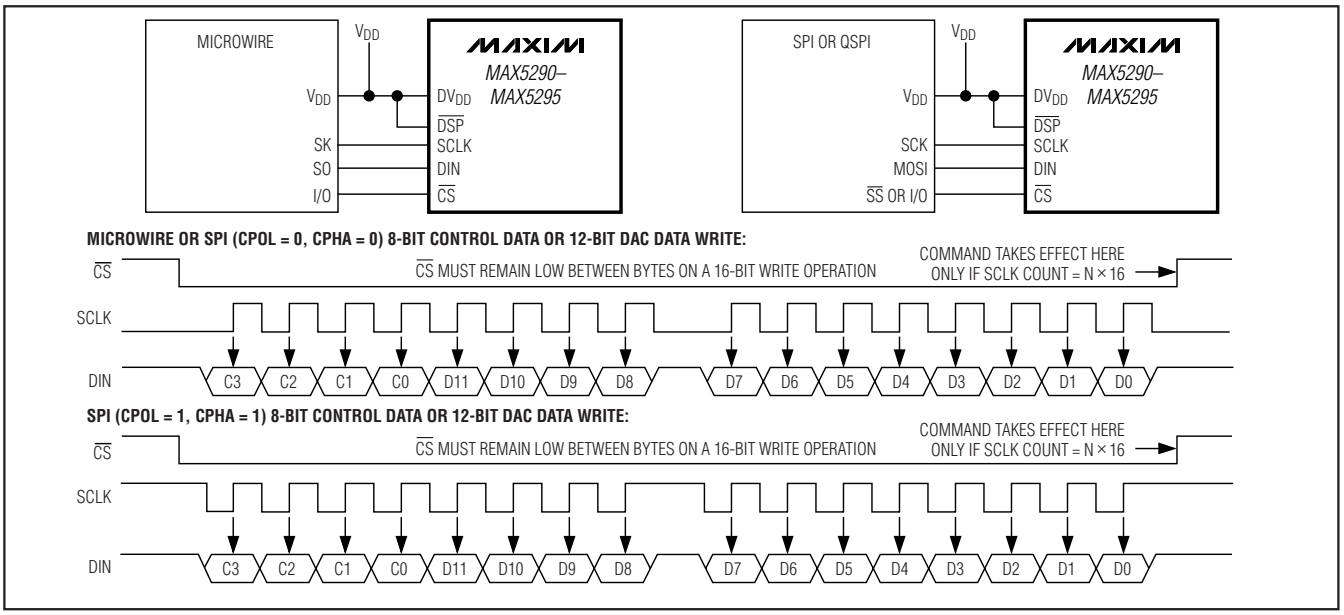

Figure 3. MICROWIRE and SPI (CPOL = 0, CPHA = 0 or CPOL = 1, CPHA = 1) DAC Writes

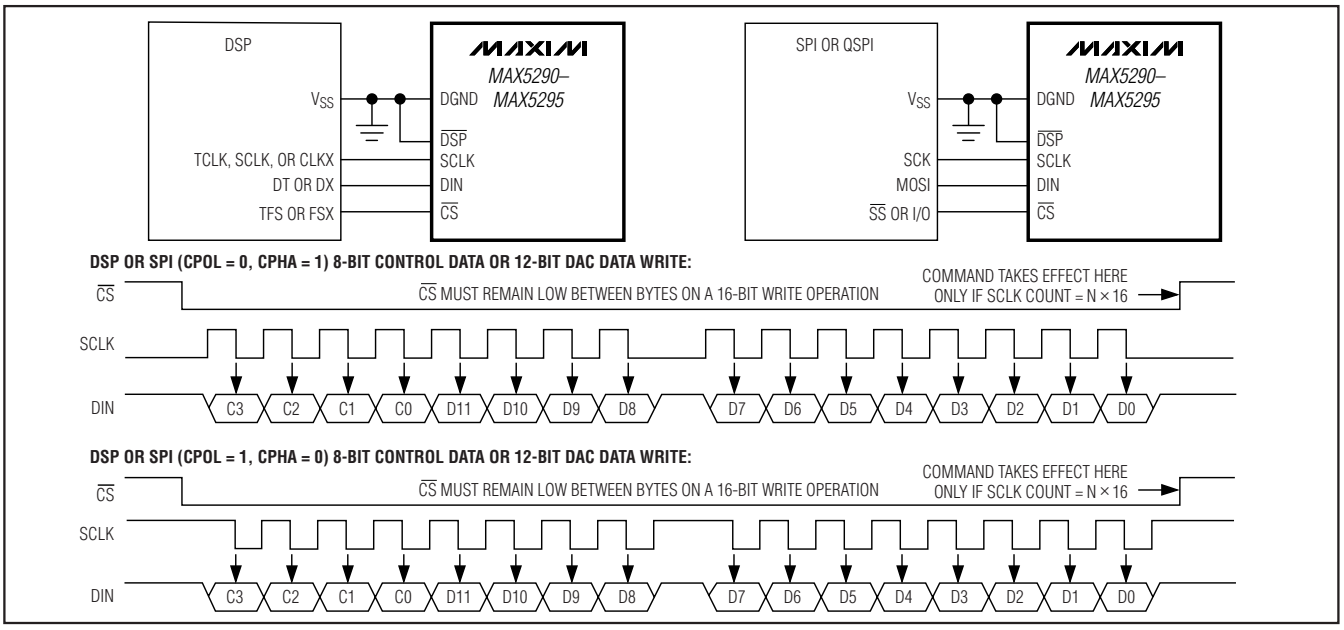

Figure 4. DSP and SPI (CPOL = 0, CPHA = 1 or CPOL = 1, CPHA = 0) DAC Writes

Table 2a. DAC Programming Commands

DATA	CONTROL BITS				DATA BITS												FUNCTION
	C3	C2	C1	C0	D1	D1	D9	D8	D7	D6	D5	D4	D3	D2	D1	D0	
LOADING INPUT AND DAC REGISTERS A AND B																	
DIN	0	0	0	0	D11	D10	D9	D8	D7	D6	D5	D4	D3/0	D2/0	D1/0	D0/0	Load input register A from shift register; DAC registers are unchanged. DAC outputs are unchanged.*
DIN	0	0	0	1	D11	D10	D9	D8	D7	D6	D5	D4	D3/0	D2/0	D1/0	D0/0	Load DAC register A from shift register; input registers are unchanged. DAC outputs are updated.*
DIN	0	0	1	0	D11	D10	D9	D8	D7	D6	D5	D4	D3/0	D2/0	D1/0	D0/0	Load input register A and DAC register A from shift register. DAC outputs are updated.*
DIN	0	0	1	1	D11	D10	D9	D8	D7	D6	D5	D4	D3/0	D2/0	D1/0	D0/0	Load input register B; DAC registers are unchanged. DAC outputs are unchanged.*
DIN	0	1	0	0	D11	D10	D9	D8	D7	D6	D5	D4	D3/0	D2/0	D1/0	D0/0	Load DAC register B from shift register; input registers are unchanged. DAC outputs are updated.*
DIN	0	1	0	1	D11	D10	D9	D8	D7	D6	D5	D4	D3/0	D2/0	D1/0	D0/0	Load input register B and DAC register B from shift register. DAC outputs are updated.*
DIN	0	1	1	0	X	X	X	X	X	X	X	X	X	X	X	X	Command is ignored.
DIN	0	1	1	1	X	X	X	X	X	X	X	X	X	X	X	X	Command is ignored.
DIN	1	0	0	0	X	X	X	X	X	X	X	X	X	X	X	X	Command is ignored.
DIN	1	0	0	1	X	X	X	X	X	X	X	X	X	X	X	X	Command is ignored.
DIN	1	0	1	0	X	X	X	X	X	X	X	X	X	X	X	X	Command is ignored.
DIN	1	0	1	1	X	X	X	X	X	X	X	X	X	X	X	X	Command is ignored.
DIN	1	1	0	0	D11	D10	D9	D8	D7	D6	D5	D4	D3/0	D2/0	D1/0	D0/0	Load all input registers from the shift register; all DAC registers are unchanged. All DAC outputs are unchanged.*
DIN	1	1	0	1	D11	D10	D9	D8	D7	D6	D5	D4	D3/0	D2/0	D1/0	D0/0	Load all input and DAC registers from shift register. DAC outputs are updated.*

X = Don't care.

**For the MAX5292/MAX5293 (10-bit version), D11–D2 are the significant bits and D1 and D0 are sub-bits. For the MAX5294/MAX5295 (8-bit version), D11–D4 are the significant bits and D3–D0 are sub-bits. Set all sub-bits to zero during the write commands.*

Table 2b. Advanced-Feature Programming Commands

DATA	CONTROL BITS				DATA BITS												FUNCTION
	C3	C2	C1	C0	D1	D1	D9	D8	D7	D6	D5	D4	D3	D2	D1	D0	
SELECT BITS																	
DIN	1	1	1	0	0	0	X	X	X	X	X	X	X	X	MB	MA	Load DAC register A from input register A when MA is 1. DAC register A is unchanged if MA is 0. Load DAC register B from input register B when MB is 1. DAC register B is unchanged if MB is 0.
SHUTDOWN-MODE BITS																	
DIN	1	1	1	0	0	1	0	X	X	X	X	X	PDB1	PDB0	PDA1	PDA0	Write DACA and DACB shutdown mode bits. See Table 8.
DIN	1	1	1	0	0	1	1	X	X	X	X	X	X	X	X	X	Read DACA and DACB shutdown mode bits.
DOUTRB	X	X	X	X	X	X	X	X	X	X	X	X	PDB1	PDB0	PDA1	PDA0	
UPIO CONFIGURATION BITS																	
DIN	1	1	1	0	1	0	0	X	UPSL2	UPSL1	UP3	UP2	UP1	UP0	X	X	Write UPIO configuration bits. See Tables 19 and 22.
DIN	1	1	1	0	1	0	1	X	X	X	X	X	X	X	X	X	Read UPIO configuration bits.
DOUTRB	X	X	X	X	X	X	X	X	UP3-2	UP2-2	UP1-2	UP0-2	UP3-1	UP2-1	UP1-1	UP0-1	
SETTLING-TIME-MODE BITS																	
DIN	1	1	1	0	1	1	0	X	X	X	X	X	X	X	SPDB	SPDA	Write DACA and DACB settling-time mode bits.
DIN	1	1	1	0	1	1	1	X	X	X	X	X	X	X	X	X	Read DACA and DACB settling-time mode bits.
DOUTRB	X	X	X	X	X	X	X	X	X	X	X	X	X	X	SPDB	SPDA	
CPOL AND CPHA CONTROL BITS																	
DIN	1	1	1	1	0	0	0	0	X	X	X	X	X	X	CPOL	CPHA	Write CPOL, CPHA control bits. See Table 15.
DIN	1	1	1	1	0	0	0	1	X	X	X	X	X	X	X	X	Read CPOL, CPHA control bits.
DOUTRB	X	X	X	X	X	X	X	X	X	X	X	X	X	X	CPOL	CPHA	

X = Don't care.

Table 2b. Advanced-Feature Programming Commands (continued)

DATA	CONTROL BITS				DATA BITS												FUNCTION
	C3	C2	C1	C0	D1	D1	D9	D8	D7	D6	D5	D4	D3	D2	D1	D0	
UPIO_ AS GPI (GENERAL-PURPOSE INPUT)																	
DIN	1	1	1	1	0	0	1	X	X	X	X	X	X	X	X	X	Read UPIO_ inputs. (Valid only when UPIO1 or UPIO2 is configured as a general-purpose input.) See GPI, GPOL, GPOH section.
DOUTRB	X	X	X	X	X	X	X	X	X	X	RTP2	LF2	LR2	RTP1	LF1	LR1	
OTHER COMMANDS																	
DIN	1	1	1	1	1	0	0	X	X	X	X	X	X	X	X	X	Command is ignored.
DIN	1	1	1	1	1	0	1	X	X	X	X	X	X	X	X	X	Command is ignored.
DIN	1	1	1	1	1	1	0	X	X	X	X	X	X	X	X	X	Command is ignored.
DIN	1	1	1	1	1	1	1	0	X	X	X	X	X	X	X	X	Command is ignored.
DIN	1	1	1	1	1	1	1	1	1	1	1	1	1	1	1	1	16-bit no-op command. All DACs are unaffected.

X = *Don't care.*

Table 2c. 24-Bit Read Commands

DATA	CONTROL BITS				DATA BITS																												FUNCTION
	C3	C2	C1	C0	D27	D26	D25	D24	D23	D22	D21	D20	D19	D18	D17	D16	D15	D14	D13	D12	D11	D10	D9	D8	D7	D6	D5	D4	D3	D2	D1	D0	
READ INPUT AND DAC REGISTERS A AND B																																	
DIN	1	1	1	1	0	1	0	X	1	1	1	1	1	1	1	1	1	1	1	1	1	1	1	1	X	X	X	X	X	X	X	X	Read input register A and DAC register A (all 24 bits).**†
DOUTRB	X	X	X	X	X	X	X	X	D23	D22	D21	D20	D19	D18	D17	D16	D15/X	D14/X	D13/X	D12/X	D11	D10	D9	D8	D7	D6	D5	D4	D3/X	D2/X	D1/X	D0/X	
DIN	1	1	1	1	0	1	1	X	1	1	1	1	1	1	1	1	1	1	1	1	1	1	1	1	X	X	X	X	X	X	X	X	Read input register B and DAC register B (all 24 bits).** †
DOUTRB	X	X	X	X	X	X	X	X	D23	D22	D21	D20	D19	D18	D17	D16	D15/X	D14/X	D13/X	D12/X	D11	D10	D9	D8	D7	D6	D5	D4	D3/X	D2/X	D1/X	D0/X	

X = *Don't care.*

***D23–D12 represent the 12-bit data from the corresponding DAC register. D11–D0 represent the 12-bit data from the corresponding input register. For the MAX5292/MAX5293, bits D13, D12, D1, and D0 are don't-care bits. For the MAX5294/MAX5295, bits D15–D12 and D3–D0 are don't-care bits.*

†During readback, all ones (code FF) must be clocked into DIN for all 24 bits. No command may be issued before all 24 bits have been clocked out. $\overline{CS}$ must be kept low while all 24 bits are clocked out.

Default register values at power-up correspond to the state of PU, e.g. input and DAC registers are set to 800hex if PU is floating, FFFhex if PU = DV_{DD}, and 000hex if PU= DGND.

DAC Programming Examples:
To load input register A from the shift register, leaving DAC register A unchanged (DAC output unchanged), use the command in Table 3.

The MAX5290–MAX5295 can load DAC register A from the shift register, leaving input register A unchanged, by using the command in Table 4.

To load input register A and DAC register A simultaneously from the shift register, use the command in Table 5.

For the 10-bit and 8-bit versions, set sub-bits = 0 for best performance.

Advanced Feature Programming Commands

Refer to the *Programmer's Handbook* for details.

Select Bits (MA, MB)

The select bits allow synchronous updating of any combination of channels. The select bits command the loading of the DAC register from the input register of each channel. Set the select bit M_ = 1 to load the DAC register "_" with data from the input register "_", where "_" is replaced with A or B depending on the selected channel. Setting the select bit to M_ = 0 results in no action for that channel (Table 6).

Table 3. Load Input Register A from Shift Register

DATA	CONTROL BITS				DATA BITS											
DIN	0	0	0	0	D11	D10	D9	D8	D7	D6	D5	D4	D3/0	D2/0	D1/0	D0/0

Table 4. Load DAC Register A from Shift Register

DATA	CONTROL BITS				DATA BITS											
DIN	0	0	0	1	D11	D10	D9	D8	D7	D6	D5	D4	D3/0	D2/0	D1/0	D0/0

Table 5. Load Input Register A and DAC Register A from Shift Register

DATA	CONTROL BITS				DATA BITS											
DIN	0	0	1	0	D11	D10	D9	D8	D7	D6	D5	D4	D3/0	D2/0	D1/0	D0/0

Table 6. Select Command

DATA	CONTROL BITS				DATA BITS											
DIN	1	1	1	0	0	0	X	X	X	X	X	X	X	X	MB	MA

X = Don't care.

Table 7. Select Bits Programming Example

DATA	CONTROL BITS				DATA BITS											
DIN	1	1	1	0	0	0	X	X	X	X	X	X	X	X	1	0

X = Don't care.

Buffered, Fast-Settling, Dual, 12-/10-/8-Bit, Voltage-Output DACs

Select Bits Programming Example:
To load DAC register B from input register B while keeping channel A unchanged, set MB = 1 and MA = 0, as in the command in Table 7.

Table 8. Shutdown-Mode Bits

PD_1	PD_0	DESCRIPTIONS
0	0	Shutdown with 1kΩ termination to ground on DAC_ output.
0	1	Shutdown with 100kΩ termination to ground on DAC_ output for unity-gain versions. Shutdown with high-impedance output for force-sense versions.
1	0	Ignored.
1	1	DAC_ is powered up in its normal operating mode.

Shutdown-Mode Bits (PDA0, PDA1, PDB0, PDB1)
Use the shutdown-mode bits to shut down each DAC independently. Set PD_0 and PD_1 according to Table 8 to select the shutdown mode for DAC_, where "_" is replaced with A or B depending on the selected channel. The three possible states for unity-gain versions are 1) normal operation, 2) shutdown with 1kΩ output impedance, and 3) shutdown with 100kΩ output impedance. The three possible states for force-sense versions are 1) normal operation, 2) shutdown with 1kΩ output impedance, and 3) shutdown with high-impedance output. Table 9 shows the command for writing to the shutdown mode bits.

Shutdown-Mode Bits Write Example:
To put a unity-gain version's DACA into shutdown mode with internal 1kΩ termination to ground and DACB into the shutdown mode with the internal 100kΩ termination to ground, use the command in Table 10 (applicable to unity-gain output only).

To read back the shutdown-mode bits, use the command in Table 11.

Table 9. Shutdown-Mode Write Command

DATA	CONTROL BITS				DATA BITS											
DIN	1	1	1	0	0	1	0	X	X	X	X	X	PDB1	PDB0	PDA1	PDA0

X = Don't care.

Table 10. Shutdown-Mode Bits Write Example

DATA	CONTROL BITS				DATA BITS											
DIN	1	1	1	0	0	1	0	X	X	X	X	X	0	1	0	0

X = Don't care.

Table 11. Shutdown-Mode Read Command

DATA	CONTROL BITS				DATA BITS											
DIN	1	1	1	0	0	1	1	X	X	X	X	X	X	X	X	X
DOUTRB	X	X	X	X	X	X	X	X	X	X	X	X	PDB1	PDB0	PDA1	PDA0

X = Don't care.

Table 12. Settling-Time-Mode Write Command

DATA	CONTROL BITS				DATA BITS											
DIN	1	1	1	0	1	1	0	X	X	X	X	X	X	X	SPDB	SPDA

X = Don't care.

Settling-Time-Mode Bits (SPDA, SPDB)

The settling-time-mode bits select the settling time (FAST mode or SLOW mode) of the MAX5290–MAX5295. Set SPD_ = 1 to select FAST mode or set SPD_ = 0 to select SLOW mode, where "_" is replaced by A or B, depending on the selected channel (see Table 12). FAST mode provides a 3µs maximum settling time and SLOW mode provides a 10µs maximum settling time. Default settling-time mode bits are [0, 0] (SLOW mode for both DACs).

Settling-Time-Mode Write Example:

To configure DACA into FAST mode and DACB into SLOW mode, use the command in Table 13.

To read back the settling-time-mode bits, use the command in Table 14.

CPOL and CPHA Control Bits

The CPOL and CPHA control bits of the MAX5290–MAX5295 are defined the same as the CPOL and CPHA bits in the SPI standard. Set the CPOL = 0 and CPHA = 0 or set CPOL = 1 and CPHA = 1 for MICROWIRE and SPI applications requiring the clocking of data in on the rising edge of SCLK. Set the CPOL = 0

Table 13. Settling-Time-Mode Write Example

DATA	CONTROL BITS				DATA BITS											
DIN	1	1	1	0	1	1	0	X	X	X	X	X	X	X	0	1

X = Don't care.

Table 14. Settling-Time-Mode Read Command

DATA	CONTROL BITS				DATA BITS											
DIN	1	1	1	0	1	1	1	X	X	X	X	X	X	X	X	X
DOUTRB	X	X	X	X	X	X	X	X	X	X	X	X	X	X	SPDB	SPDA

X = Don't care.

Table 15. CPOL and CPHA Bits

CPOL	CPHA	DESCRIPTION
0	0	Default values at power-up when $\overline{DSP}$ is connected to DV_{DD}. Data is clocked in on the rising edge of SCLK.
0	1	Default values at power-up when $\overline{DSP}$ is connected to DGND. Data is clocked in on the falling edge of SCLK.
1	0	Data is clocked in on the falling edge of SCLK.
1	1	Data is clocked in on the rising edge of SCLK.

Table 16. CPOL and CPHA Write Command

DATA	CONTROL BITS				DATA BITS											
DIN	1	1	1	1	0	0	0	0	X	X	X	X	X	X	CPOL	CPHA

X = Don't care.

Table 17. CPOL and CPHA Read Command

DATA	CONTROL BITS				DATA BITS											
DIN	1	1	1	1	0	0	0	1	X	X	X	X	X	X	X	X
DOUTRB	X	X	X	X	X	X	X	X	X	X	X	X	X	X	CPOL	CPHA

X = Don't care.

Buffered, Fast-Settling, Dual, 12-/10-/8-Bit, Voltage-Output DACs

and CPHA = 1 or set CPOL = 1 and CPHA = 0 for DSP and SPI applications requiring the clocking of data in on the falling edge of SCLK (refer to the *Programmer's Handbook* and see Table 15 for details). At power-up, if $\overline{DSP}$ = DV_{DD}, the default value of CPHA is zero and if $\overline{DSP}$ = DGND, the default value of CPHA is one. The default value of CPOL is zero at power-up.

To write to the CPOL and CPHA bits, use the command in Table 16.

To read back the device's CPOL and CPHA bits, use the command in Table 17.

UPIO Bits (UPSL1, UPSL2, UP0–UP3)

The MAX5290–MAX5295 provide two user-programmable input/output (UPIO) ports: UPIO1 and UPIO2. These ports have 15 possible configurations, as shown in Table 22. UPIO1 and UPIO2 can be programmed independently or simultaneously by writing to the UPSL1, UPSL2, and UP0–UP3 bits (see Table 18).

Table 19 shows how UPIO1 and UPIO2 are selected for configuration. The UP0–UP3 bits select the desired functions for UPIO1 and/or UPIO2 (see Table 22).

Default states of UP10_ are high impedance. If using UP10_, connect 10kΩ pullup resistors from each UPIO pin to DV_{DD}.

UPIO Programming Example:
To set only UPIO1 as $\overline{LDAC}$ and leave UPIO2 unchanged, write the command in Table 20.

The UPIO selection and configuration bits can be read back from the MAX5290–MAX5295 when UPIO1 or UPIO2 is configured as a DOUTRB output. Table 21 shows the read-back data format for the UPIO bits. Writing a 1110 101X XXXX XXXX initiates a read operation of the UPIO bits. The data is clocked out starting on the 9th clock cycle of the sequence. UP3-2 through UP0-2 provide the UP3–UP0 configuration bits for UPIO2 (see Table 22), and UP3-1 through UP0-1 provide the UP3–UP0 configuration bits for UPIO1.

Table 18. UPIO Write Command

DATA	CONTROL BITS				DATA BITS											
DIN	1	1	1	0	1	0	0	X	UPSL2	UPSL1	UP3	UP2	UP1	UP0	X	X

X = Don't care.

Table 19. UPIO Selection Bits (UPSL1 and UPSL2)

UPSL2	UPSL1	UPIO PORT SELECTED
0	0	None selected
0	1	UPIO1 selected
1	0	UPIO2 selected
1	1	Both UPIO1 and UPIO2 selected

Table 20. UPIO Programming Example

DATA	CONTROL BITS				DATA BITS											
DIN	1	1	1	0	1	0	0	X	0	1	0	0	0	0	X	X

X = Don't care.

Table 21. UPIO Read Command

DATA	CONTROL BITS				DATA BITS											
DIN	1	1	1	0	1	0	1	X	X	X	X	X	X	X	X	X
DOUTRB	X	X	X	X	X	X	X	X	UP3-2	UP2-2	UP1-2	UP0-2	UP3-1	UP2-1	UP1-1	UP0-1

X = Don't care.

User-Programmable Input/Output (UPIO) Configuration

Table 22 lists the possible configurations for UPIO1 and UPIO2. UPIO1 and UPIO2 use the selected function when configured by the UP3–UP0 configuration bits.

$\overline{LDAC}$

$\overline{LDAC}$ controls loading of the DAC registers. When $\overline{LDAC}$ is high, the DAC registers are latched, and any change in the input registers does not affect the contents of the DAC registers or the DAC outputs. When $\overline{LDAC}$ is low, the DAC registers are transparent, and the values stored in the input registers are fed directly to the DAC registers, and the DAC outputs are updated.

Drive $\overline{LDAC}$ low to asynchronously load the DAC registers from their corresponding input registers (DACs that are in shutdown remain shut down). The $\overline{LDAC}$ function does not require any activity on $\overline{CS}$, SCLK, or DIN. If $\overline{LDAC}$ is brought low coincident with a rising edge of $\overline{CS}$, (which executes a serial command modifying the value of either DAC input register), then $\overline{LDAC}$ must remain asserted for at least 120ns following the $\overline{CS}$ rising edge. This requirement applies only to serial commands that modify the value of the DAC input registers. See Figures 5 and 6 for timing details.

Table 22. UPIO Configuration Register Bits (UP3–UP0)

UPIO CONFIGURATION BITS				FUNCTION	DESCRIPTION
UP3	UP2	UP1	UP0		
0	0	0	0	$\overline{LDAC}$	Active-Low Load DAC Input. Drive low to asynchronously load all DAC registers with data from input registers.
0	0	0	1	$\overline{SET}$	Active-Low Input. Drive low to set all input and DAC registers to full scale.
0	0	1	0	$\overline{MID}$	Active-Low Input. Drive low to set all input and DAC registers to midscale.
0	0	1	1	$\overline{CLR}$	Active-Low Input. Drive low to set all input and DAC registers to zero scale.
0	1	0	0	$\overline{PDL}$	Active-Low Power-Down Lockout Input. Drive low to disable software shutdown.
0	1	0	1	Reserved	This mode is reserved. Do not use.
0	1	1	0	$\overline{SHDN1K}$	Active-Low 1kΩ Shutdown Input. Overrides PD_1 and PD_0 settings. Drive $\overline{SHDN1K}$ low to pull OUTA and OUTB to AGND with 1kΩ.
0	1	1	1	$\overline{SHDN100K}$	Active-Low 100kΩ Shutdown Input. Overrides PD_1 and PD_0 settings. For the MAX5290/MAX5292/MAX5294, drive $\overline{SHDN100K}$ low to pull OUTA and OUTB to AGND with 100kΩ. For the MAX5291/MAX5293/MAX5295, drive $\overline{SHDN100K}$ low to leave OUTA and OUTB high impedance.
1	0	0	0	DOUTRB	Data Read-Back Output
1	0	0	1	DOUTDC0	Mode 0 Daisy-Chain Data Output. Data is clocked out on the falling edge of SCLK.
1	0	1	0	DOUTDC1	Mode 1 Daisy-Chain Data Output. Data is clocked out on the rising edge of SCLK.
1	0	1	1	GPI	General-Purpose Logic Input
1	1	0	0	GPOL	General-Purpose Logic-Low Output
1	1	0	1	GPOH	General-Purpose Logic-High Output
1	1	1	0	TOGG	Toggle Input. Toggles DAC outputs between data in input registers and data in DAC registers. Drive low to set all DAC outputs to values stored in input registers. Drive high to set all DAC outputs to values stored in DAC registers.
1	1	1	1	$\overline{FAST}$	FAST/SLOW Settling-Time Mode Input. Drive low to select FAST mode (3µs) or drive high to select SLOW settling mode (10µs). Overrides the SPDA and SPDB settings.

Buffered, Fast-Settling, Dual, 12-/10-/8-Bit, Voltage-Output DACs

SET, MID, CLR

The SET, MID, and CLR signals force the DAC outputs to full scale, midscale, or zero scale (Figure 5). These signals cannot be active at the same time.

The active-low SET input forces the DAC outputs to full scale when SET is low. When SET is high, the DAC outputs follow the data in the DAC registers.

The active-low MID input forces the DAC outputs to midscale when MID is low. When MID is high, the DAC outputs follow the data in the DAC registers.

The active-low CLR input forces the DAC outputs to zero scale when CLR is low. When CLR is high, the DAC outputs follow the data in the DAC registers.

If CLR, MID, or SET signals go low in the middle of a write command, reload the data to ensure accurate results.

Power-Down Lockout (PDL)

The PDL active-low software-shutdown lockout input overrides (not overwrites), the PD_0 and PD_1 shutdown mode bits. PDL cannot be active at the same time as SHDN1K or SHDN100K (see the *Shutdown Mode (SHDN1K, SHDN100K)* section).

If the PD_0 and PD_1 bits command the DAC to shut down prior to PDL going low, the DAC returns to shutdown mode immediately after PDL goes high, unless the PD_0 and PD_1 bits are changed in the meantime.

Shutdown Mode (SHDN1K, SHDN100K)

The SHDN1K and SHDN100K are active-low signals that override (not overwrite) the PD_1 and PD_0 bit settings. For the MAX5290/MAX5292/MAX5294, drive SHDN1K low to select shutdown mode with OUTA and OUTB internally terminated with 1kΩ to ground, or drive SHDN100K low to select shutdown with an internal 100kΩ termination. For the MAX5291/MAX5293/MAX5295, drive SHDN1K low for shutdown with 1kΩ output termination, or drive SHDN100K low for shutdown with high-impedance outputs.

Data Output (DOUTRB, DOUTDC0, DOUTDC1)

UPIO1 and UPIO2 can be configured as serial data outputs, DOUTRB (data out for read back), DOUTDC0 (data out for daisy-chaining, mode 0), and DOUTDC1 (data out for daisy-chaining, mode 1). The differences between DOUTRB and DOUTDC0 (or DOUTDC1) are as follows:

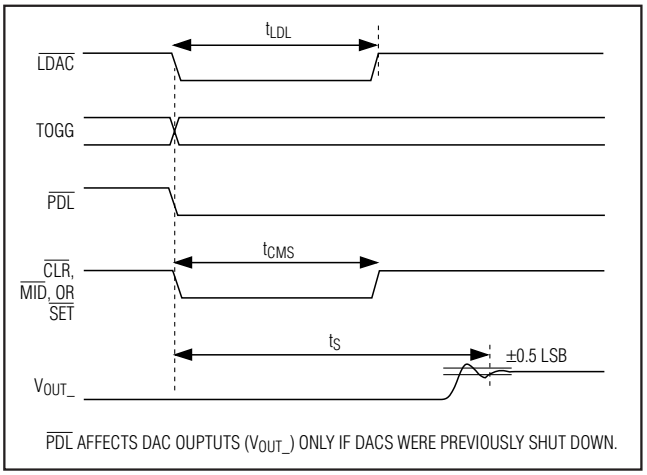

Figure 5. Asynchronous Signal Timing

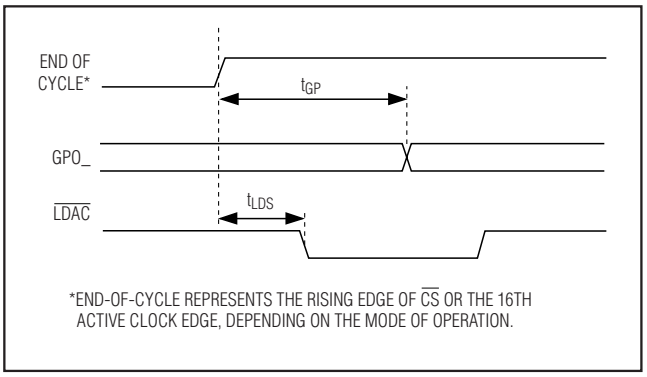

Figure 6. GPO_ and LDAC Signal Timing

- The source of read-back data on DOUTRB is the DOUT register. Daisy-chain DOUTDC_ data comes directly from the shift register.
- Read-back data on DOUTRB is only present after a DAC read command. Daisy-chain data is present on DOUTDC_ for any DAC write after the first 16 bits are written.
- The DOUTRB idle state (CS = high) for read back is high impedance. Daisy-chain DOUTDC_ idles high when inactive to avoid floating the data input in the next device in the daisy-chain.

See Figures 1 and 2 for timing details.

GPI, GPOL, GPOH

UPIO1 and UPIO2 can each be configured as a general-purpose logic input (GPI), a general-purpose logic-low output (GPOL), or general-purpose logic-high output (GPOH).

The GPI can detect interrupts from µPs or microcontrollers. It provides three functions:

1) Sample the signal at GPI at the time of the read (RTP1 and RTP2).
2) Detect whether or not a falling edge has occurred since the last read or reset (LF1 and LF2).
3) Detect whether or not a rising edge has occurred since the last read or reset (LR1 and LR2).

RTP1, LF1, and LR1 represent the data read from UPIO1. RTP2, LF2, and LR2 represent the data read from UPIO2.

To issue a read command for the UPIO configured as GPI, use the command in Table 23.

Once the command is issued, RTP1 and RTP2 provide the real-time status (0 or 1) of the inputs at UPIO1 or UPIO2, respectively, at the time of the read. If LF2 or LF1 is one, then a falling edge has occurred on the UPIO1 or UPIO2 input since the last read or reset. If LR2 or LR1 is one, then a rising edge has occurred since the last read or reset.

GPOL outputs a constant logic low, and GPOH outputs a constant logic high (see Figure 6).

TOGG

Use the TOGG input to toggle a DAC output between the values in the input register and DAC register. A delay of greater than 100ns from the end of the previous write command is required before the TOGG signal can be correctly switched between the new value and the previously stored value. When TOGG = 0, the output follows the information in the input registers. When TOGG = 1, the output follows the information in the DAC register (Figure 5).

$\overline{\text{FAST}}$

The MAX5290–MAX5295 have two settling-time-mode options: FAST (3µs max at 12 bits) and SLOW (6µs max at 12 bits). To select the FAST mode, drive $\overline{\text{FAST}}$ low, and to select SLOW mode, drive $\overline{\text{FAST}}$ high. This overrides (not overwrites) the SPDA and SPDB bit settings.

Table 23. GPI Read Command

DATA	CONTROL BITS				DATA BITS											
DIN	1	1	1	1	0	0	1	X	X	X	X	X	X	X	X	X
DOUTRB	X	X	X	X	X	X	X	X	X	X	RTP2	LF2	LR2	RTP1	LF1	LR1

X = Don't care.

Table 24. Unipolar Code Table (Gain = +1)

DAC CONTENTS MSB		LSB	ANALOG OUTPUT
1111	1111	1111	$+V_{REF}$ (4095 / 4096)
1000	0000	0001	$+V_{REF}$ (2049 / 4096)
1000	0000	0000	$+V_{REF}$ (2048 / 4096) = V_{REF} / 2
0111	1111	1111	$+V_{REF}$ (2047 / 4096)
0000	0000	0001	$+V_{REF}$ (1 / 4096)
0000	0000	0000	0

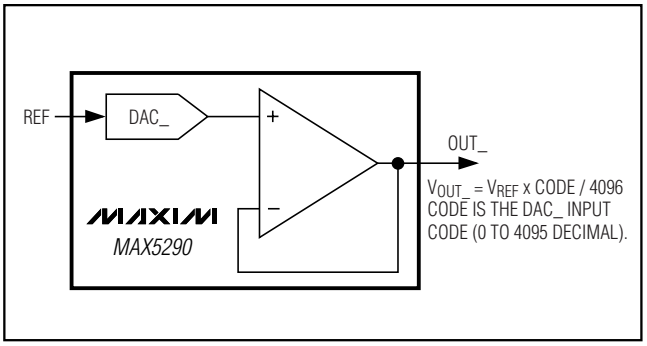

Figure 7. Unipolar Output Circuit

Buffered, Fast-Settling, Dual, 12-/10-/8-Bit, Voltage-Output DACs

Applications Information

Unipolar Output

Figure 7 shows the unity gain of the MAX5290 in a unipolar output configuration. Table 24 lists the unipolar output codes.

Bipolar Output

The MAX5290 outputs can be configured for bipolar operation, as shown in Figure 8. The output voltage is given by the following equation:

$$V_{OUT_} = V_{REF} \times (CODE - 2048) / 2048$$

where CODE represents the numeric value of the DAC's binary input code (0 to 4095 decimal). Table 25 shows digital codes and the corresponding output voltage for the Figure 8 circuit.

Table 25. Bipolar Code Table (Gain = +1)

DAC CONTENTS MSB		LSB	ANALOG OUTPUT
1111	1111	1111	$+V_{REF}$ (2047 / 2048)
1000	0000	0001	$+V_{REF}$ (1 / 2048)
1000	0000	0000	0
0111	1111	1111	$+V_{REF}$ (1 / 2048)
0000	0000	0001	$-V_{REF}$ (2047 / 2048)
0000	0000	0000	$-V_{REF}$ (2048 / 2048) = $-V_{REF}$

Configurable Output Gain

The MAX5291/MAX5293/MAX5295 have force-sense outputs, which provide a connection directly to the inverting terminal of the output op amp, yielding the most flexibility. The advantage of the force-sense output is that specific gains can be set externally for a given application. The gain error for the MAX5291/MAX5293/MAX5295 is specified in a unity-gain configuration (op-amp output and inverting terminals connected) and additional gain error results from external resistor tolerances. The force-sense DACs allow many useful circuits to be created with only a few simple external components.

An example of a custom, fixed gain using the MAX5291's force-sense output is shown in Figure 9. In this example, the external reference is set to 1.25V, and the gain is set to +1.1V/V with external discrete resistors to provide an approximate 0 to 1.375V DAC output voltage range.

$$V_{OUT_} = [(0.5 \times V_{REF} \times CODE) / 4096] \times [1 + (R2 / R1)]$$

where CODE represents the numeric value of the DAC's binary input code (0 to 4095 decimal).

In this example, if R2 = 12kΩ and R1 = 10kΩ, set the gain = 1.1V/V:

$$V_{OUT_} = [(0.5 \times 1.25V \times CODE) / 4096] \times 2.2$$

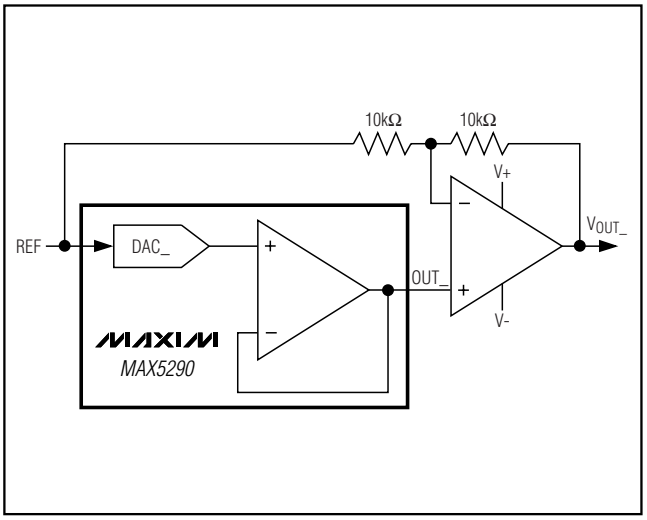

Figure 8. Bipolar Output Circuit

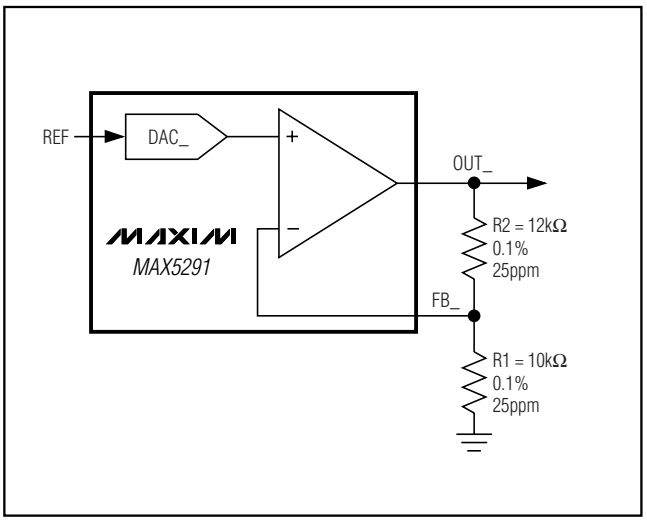

Figure 9. Configurable Output Gain

Power-Supply and Layout Considerations

Bypass the analog and digital power supplies with a 10µF capacitor in parallel with a 0.1µF capacitor to analog ground (AGND) and digital ground (DGND) (see Figure 10). Minimize lead lengths to reduce lead inductance. If noise is an issue, use shielding and/or ferrite beads to increase isolation.

Digital and AC transient signals coupling to AGND create noise at the output. Connect AGND to the highest quality ground available. Use proper grounding techniques, such as a multilayer board with a low-inductance ground plane. Wire-wrapped boards and sockets are not recommended. For optimum system performance, use printed circuit (PC) boards with separate analog and digital ground planes. Connect the two ground planes together at the low-impedance power-supply source.

Using separate power supplies for AV_{DD} and DV_{DD} improves noise immunity. Connect AGND and DGND at the low-impedance power-supply source (see Figure 11).

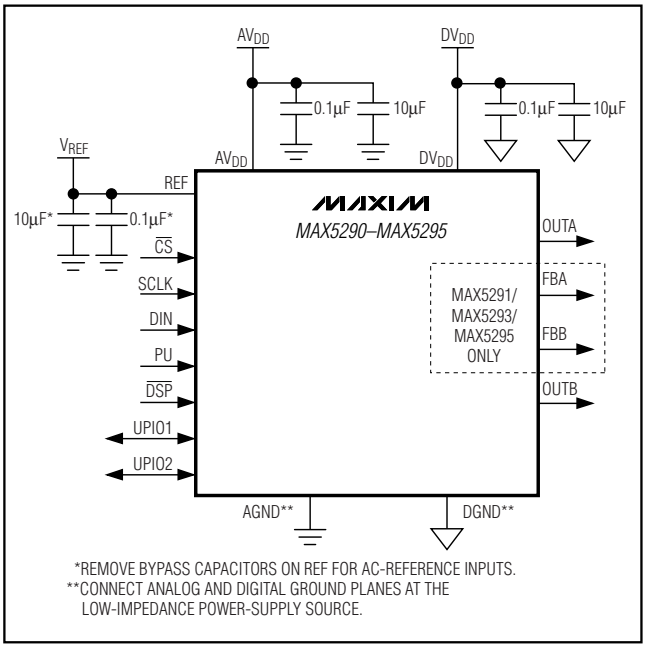

Figure 10. Bypassing Power Supplies and Reference

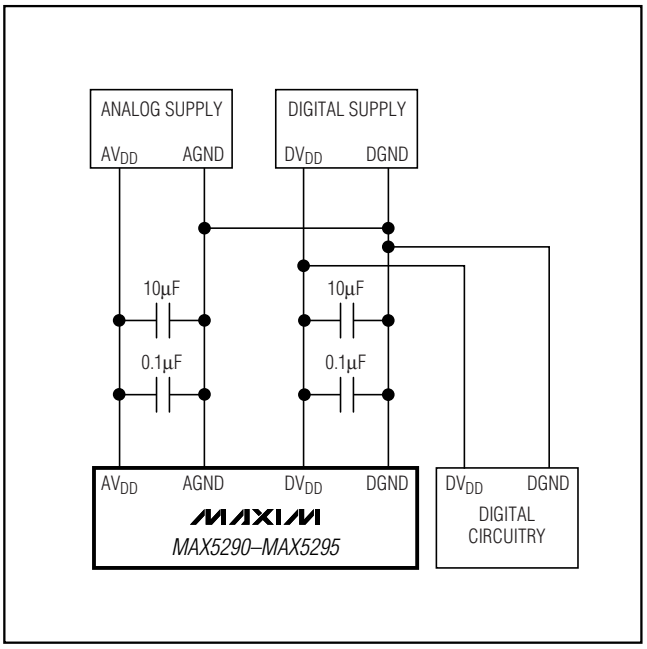

Figure 11. Separate Analog and Digital Power Supplies

Buffered, Fast-Settling, Dual, 12-/10-/8-Bit, Voltage-Output DACs

Pin Configurations

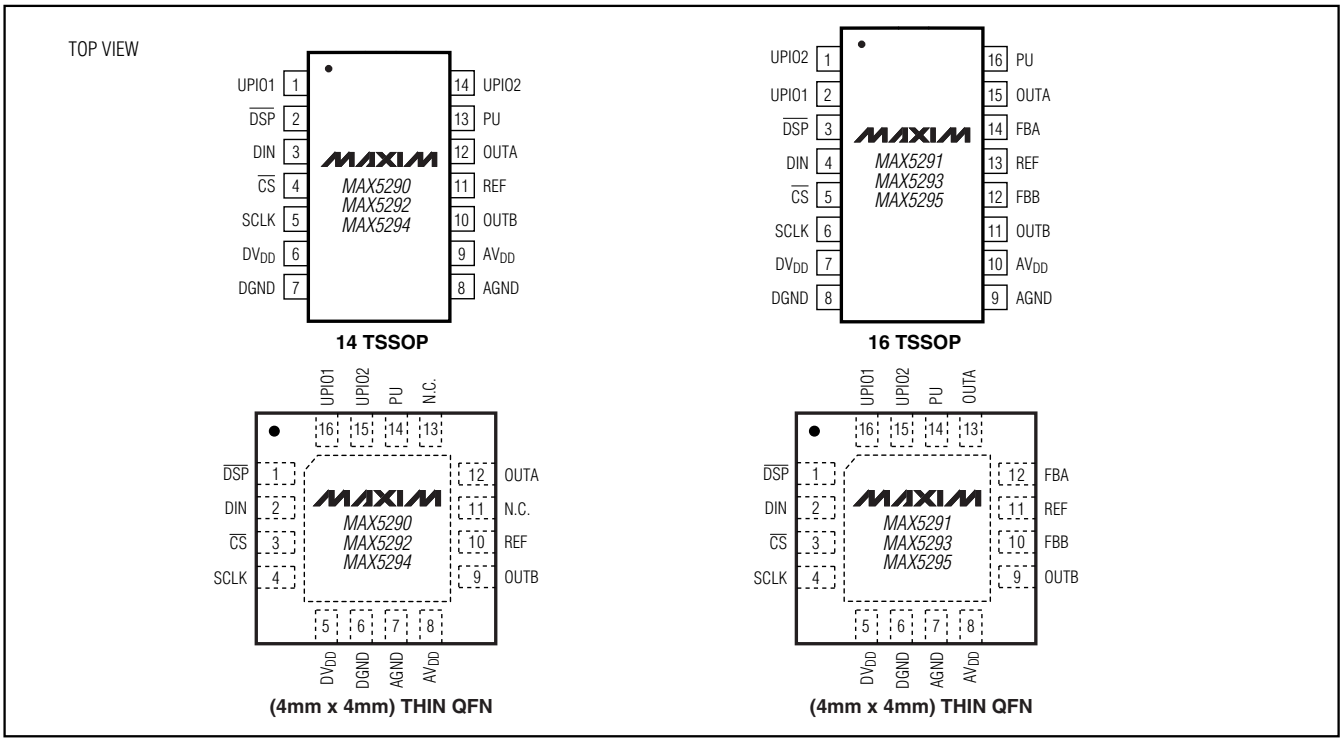

Selector Guide

PART	OUTPUT BUFFER CONFIGURATION	RESOLUTION (BITS)	INL (LSBs MAX)
MAX5290AEUD	Unity Gain	12	±1
MAX5290BEUD	Unity Gain	12	±4
MAX5290AETE*	Unity Gain	12	±1
MAX5290BETE	Unity Gain	12	±4
MAX5291AEUE	Force Sense	12	±1
MAX5291BEUE	Force Sense	12	±4
MAX5291AETE*	Force Sense	12	±1
MAX5291BETE	Force Sense	12	±4
MAX5292EUD	Unity Gain	10	±1
MAX5292ETE	Unity Gain	10	±1
MAX5293EUE	Force Sense	10	±1
MAX5293ETE	Force Sense	10	±1
MAX5294EUD	Unity Gain	8	±0.5
MAX5294ETE	Unity Gain	8	±0.5
MAX5295EUE	Force Sense	8	±0.5
MAX5295ETE	Force Sense	8	±0.5

**Future product—contact factory for availability. Specifications are preliminary.*

Chip Information

TRANSISTOR COUNT: 16,758

PROCESS: BiCMOS

Package Information

(The package drawing(s) in this data sheet may not reflect the most current specifications. For the latest package outline information go to **www.maxim-ic.com/packages**.)

TSSOP4.40mm.EPS

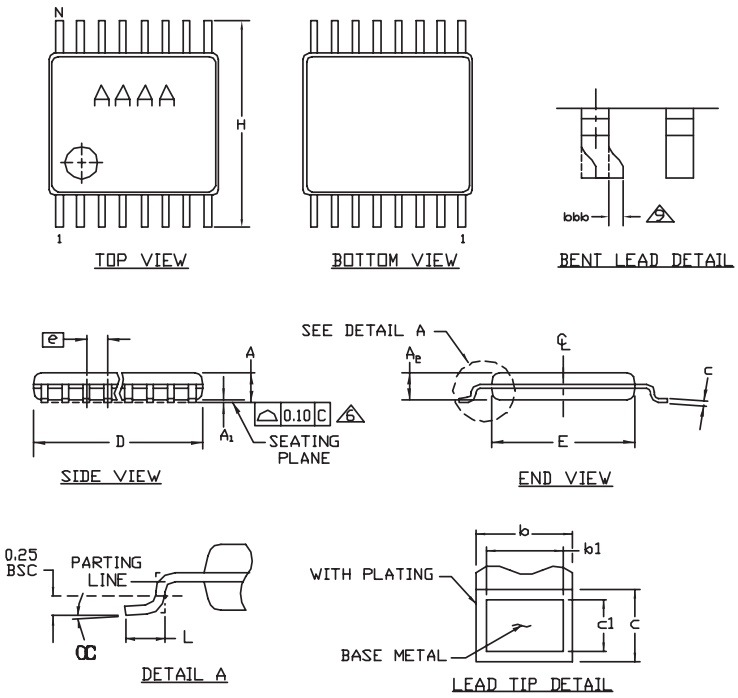

SYMBOL	COMMON DIMENSIONS			
	MILLIMETERS		INCHES	
	MIN.	MAX.	MIN.	MAX.
A	—	1.10		.043
A_1	0.05	0.15	.002	.006
A_2	0.85	0.95	.033	.037
b	0.19	0.30	.007	.012
b_1	0.19	0.25	.007	.010
c	0.09	0.20	.004	.008
c_1	0.09	0.14	.004	.006
D	SEE VARIATIONS		SEE VARIATIONS	
E	4.30	4.50	.169	.177
e	0.65 BSC		.026 BSC	
H	6.25	6.55	.246	.258
L	0.50	0.70	.020	.028
N	SEE VARIATIONS		SEE VARIATIONS	
α	0°	8°	0°	8°
aaa	0.10 MAX			

JEDEC MO-153	N		PKG. CODES	VARIATIONS			
				MILLIMETERS		INCHES	
				MIN.	MAX.	MIN.	MAX.
AB-1	14	D	U14-1; U14-2	4.90	5.10	.193	.201
AB	16	D	U16-1; U16-2	4.90	5.10	.193	.201
AC	20	D	U20-2; U20-3	6.40	6.60	.252	.260
AD	24	D	U24-1	7.70	7.90	.303	.311
AE	28	D	U28-1; U28-2; U28-3	9.60	9.80	.378	.386

NOTES
1. DIMENSIONS D AND E DO NOT INCLUDE FLASH
2. MOLD FLASH OR PROTRUSIONS NOT TO EXCEED 0.15mm PER SIDE
3. CONTROLLING DIMENSION: MILLIMETER
4. MEETS JEDEC OUTLINE MO-153. SEE JEDEC VARIATIONS TABLE
5. "N" REFERS TO NUMBER OF LEADS
6. LEAD COPLANARITY 0.10 MM MAX.
7. NUMBER OF LEADS SHOWN ARE FOR REFERENCE ONLY
8. MARKING IS FOR PACKAGE ORIENTATION REFERENCE ONLY
9. BENT LEAD 0.10 MM MAX.

-DRAWING NOT TO SCALE-

DALLAS SEMICONDUCTOR MAXIM

TITLE: PACKAGE OUTLINE, TSSOP 4.40mm BODY

APPROVAL	DOCUMENT CONTROL NO.	REV.	
	21-0066	I	1/1

Buffered, Fast-Settling, Dual, 12-/10-/8-Bit, Voltage-Output DACs

Package Information (continued)

(The package drawing(s) in this data sheet may not reflect the most current specifications. For the latest package outline information go to **www.maxim-ic.com/packages**.)

24L QFN THIN.EPS

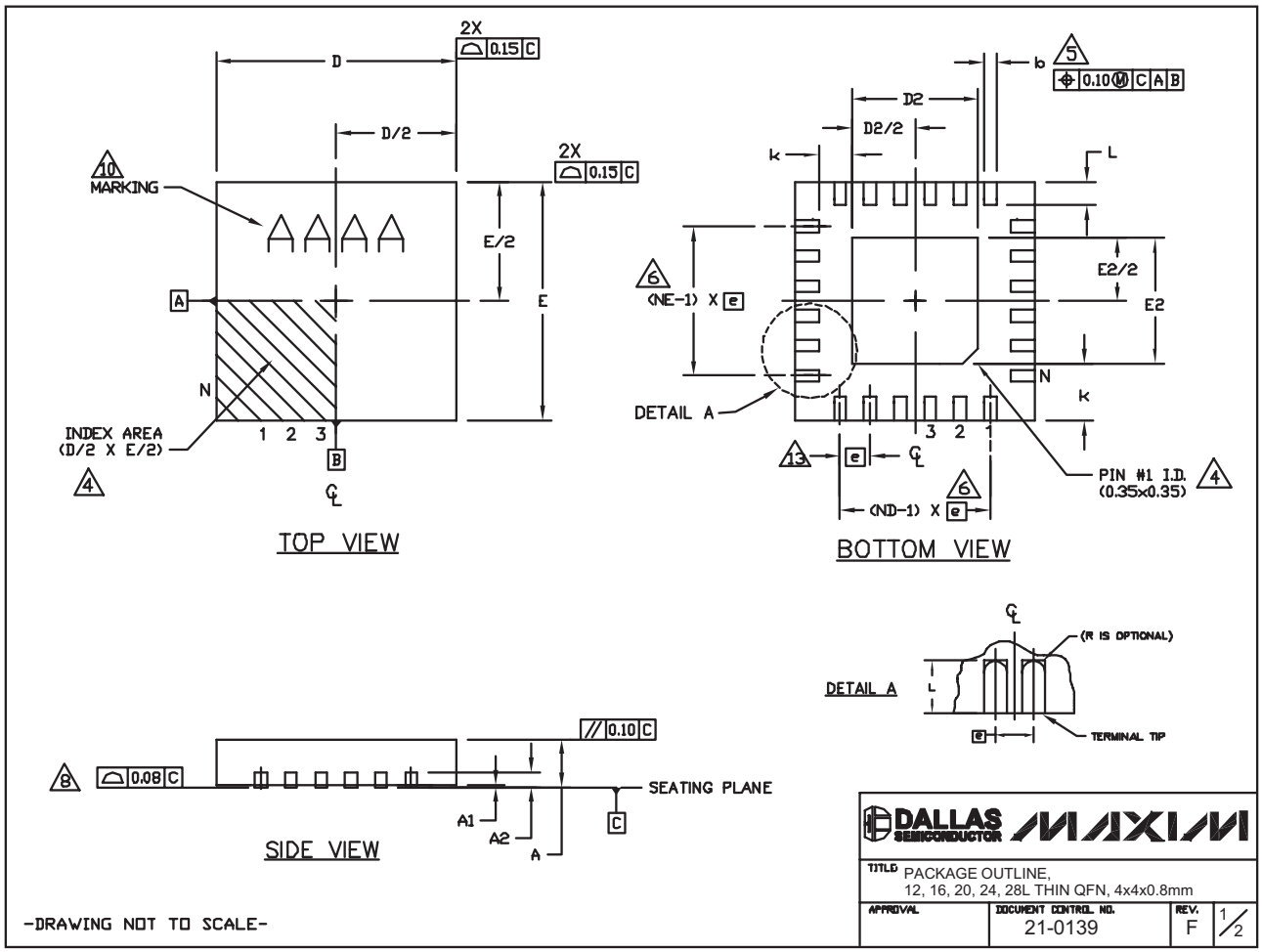

Package Information (continued)

(The package drawing(s) in this data sheet may not reflect the most current specifications. For the latest package outline information go to **www.maxim-ic.com/packages**.)

COMMON DIMENSIONS															
PKG	12L 4x4			16L 4x4			20L 4x4			24L 4x4			28L 4x4		
REF.	MIN.	NOM.	MAX.	MIN.	NOM.	MAX.	MIN.	NOM.	MAX.	MIN.	NOM.	MAX.	MIN.	NOM.	MAX.
A	0.70	0.75	0.80	0.70	0.75	0.80	0.70	0.75	0.80	0.70	0.75	0.80	0.70	0.75	0.80
A1	0.0	0.02	0.05	0.0	0.02	0.05	0.0	0.02	0.05	0.0	0.02	0.05	0.0	0.02	0.05
A2	0.20 REF			0.20 REF			0.20 REF			0.20 REF			0.20 REF		
b	0.25	0.30	0.35	0.25	0.30	0.35	0.20	0.25	0.30	0.18	0.23	0.30	0.15	0.20	0.25
D	3.90	4.00	4.10	3.90	4.00	4.10	3.90	4.00	4.10	3.90	4.00	4.10	3.90	4.00	4.10
E	3.90	4.00	4.10	3.90	4.00	4.10	3.90	4.00	4.10	3.90	4.00	4.10	3.90	4.00	4.10
e	0.80 BSC.			0.65 BSC.			0.50 BSC.			0.50 BSC.			0.40 BSC.		
k	0.25	-	-	0.25	-	-	0.25	-	-	0.25	-	-	0.25	-	-
L	0.45	0.55	0.65	0.45	0.55	0.65	0.45	0.55	0.65	0.30	0.40	0.50	0.30	0.40	0.50
N	12			16			20			24			28		
ND	3			4			5			6			7		
NE	3			4			5			6			7		
Jedec Var.	WGGB			WGGC			WGGD-1			WGGD-2			WGGE		

EXPOSED PAD VARIATIONS						
PKG. CODES	D2			E2		
	MIN.	NOM.	MAX.	MIN.	NOM.	MAX.
T1244-3	1.95	2.10	2.25	1.95	2.10	2.25
T1244-4	1.95	2.10	2.25	1.95	2.10	2.25
T1644-3	1.95	2.10	2.25	1.95	2.10	2.25
T1644-4	1.95	2.10	2.25	1.95	2.10	2.25
T2044-2	1.95	2.10	2.25	1.95	2.10	2.25
T2044-3	1.95	2.10	2.25	1.95	2.10	2.25
T2444-2	1.95	2.10	2.25	1.95	2.10	2.25
T2444-3	2.45	2.60	2.63	2.45	2.60	2.63
T2444-4	2.45	2.60	2.63	2.45	2.60	2.63
T2844-1	2.50	2.60	2.70	2.50	2.60	2.70

NOTES:
1. DIMENSIONING & TOLERANCING CONFORM TO ASME Y14.5M-1994.
2. ALL DIMENSIONS ARE IN MILLIMETERS. ANGLES ARE IN DEGREES.
3. N IS THE TOTAL NUMBER OF TERMINALS.
4. THE TERMINAL #1 IDENTIFIER AND TERMINAL NUMBERING CONVENTION SHALL CONFORM TO JESD 95-1 SPP-012. DETAILS OF TERMINAL #1 IDENTIFIER ARE OPTIONAL, BUT MUST BE LOCATED WITHIN THE ZONE INDICATED. THE TERMINAL #1 IDENTIFIER MAY BE EITHER A MOLD OR MARKED FEATURE.
5. DIMENSION b APPLIES TO METALLIZED TERMINAL AND IS MEASURED BETWEEN 0.25mm AND 0.30mm FROM TERMINAL TIP.
6. ND AND NE REFER TO THE NUMBER OF TERMINALS ON EACH D AND E SIDE RESPECTIVELY.
7. DEPOPULATION IS POSSIBLE IN A SYMMETRICAL FASHION.
8. COPLANARITY APPLIES TO THE EXPOSED HEAT SINK SLUG AS WELL AS THE TERMINALS.
9. DRAWING CONFORMS TO JEDEC MO220, EXCEPT FOR T2444-3, T2444-4 AND T2844-1.
10. MARKING IS FOR PACKAGE ORIENTATION REFERENCE ONLY.
11. COPLANARITY SHALL NOT EXCEED 0.08mm.
12. WARPAGE SHALL NOT EXCEED 0.10mm.
13. LEAD CENTERLINES TO BE AT TRUE POSITION AS DEFINED BY BASIC DIMENSION 'e', ±0.05.
14. NUMBER OF LEADS SHOWN ARE FOR REFERENCE ONLY.
15. ALL DIMENSIONS ARE THE SAME FOR LEADED & PbFREE PARTS.

-DRAWING NOT TO SCALE-

DALLAS SEMICONDUCTOR MAXIM

TITLE: PACKAGE OUTLINE, 12, 16, 20, 24, 28L THIN QFN, 4x4x0.8mm

APPROVAL	DOCUMENT CONTROL NO.	REV.	
	21-0139	F	2/2

Revision History

Pages changed at Rev 3: 1, 6–9, 33, 34, 35

Maxim cannot assume responsibility for use of any circuitry other than circuitry entirely embodied in a Maxim product. No circuit patent licenses are implied. Maxim reserves the right to change the circuitry and specifications without notice at any time.

© 2007 Maxim Integrated Products MAXIM is a registered trademark of Maxim Integrated Products, Inc.