HEF4520B

Dual binary counter

Rev. 7 — 30 March 2016 | Product data sheet

1. General description

The HEF4520B is a dual 4-bit internally synchronous binary counter. The counter has an active HIGH clock input (nCP0) and an active LOW clock input (n$\overline{CP}$1), buffered outputs from all four bit positions (nQ0 to nQ3) and an active HIGH overriding asynchronous master reset input (nMR).

The counter advances on either the LOW-to-HIGH transition of the nCP0 input if n$\overline{CP}$1 is HIGH or the HIGH-to-LOW transition of the n$\overline{CP}$1 input if nCP0 is LOW. Either nCP0 or n$\overline{CP}$1 may be used as the clock input to the counter while the other clock input may be used as a clock enable input. Schmitt trigger action makes the clock input highly tolerant of slower clock rise and fall times. A HIGH on nMR resets the counter (nQ0 to nQ3 = LOW) independent of nCP0 and n$\overline{CP}$1.

It operates over a recommended V_{DD} power supply range of 3 V to 15 V referenced to V_{SS} (usually ground). Unused inputs must be connected to V_{DD}, V_{SS}, or another input.

2. Features and benefits

- Tolerant of slow clock rise and fall times
- Fully static operation
- 5 V, 10 V, and 15 V parametric ratings
- Standardized symmetrical output characteristics
- Specified from –40 °C to +85 °C
- Complies with JEDEC standard JESD 13-B

3. Ordering information

Table 1. Ordering information

All types operate from –40 °C to +85 °C.

Type number	Package		
	Name	Description	Version
HEF4520BT	SO16	plastic small outline package; 16 leads; body width 3.9 mm	SOT109-1

4. Functional diagram

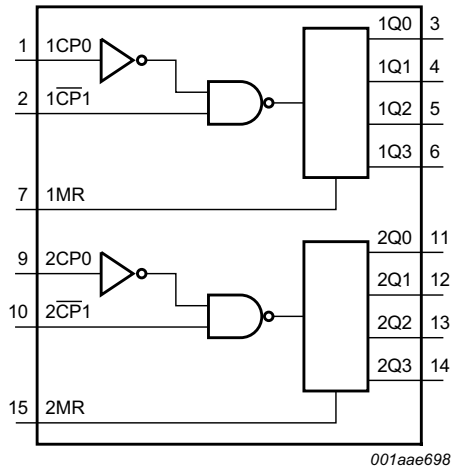

Fig 1. Functional diagram

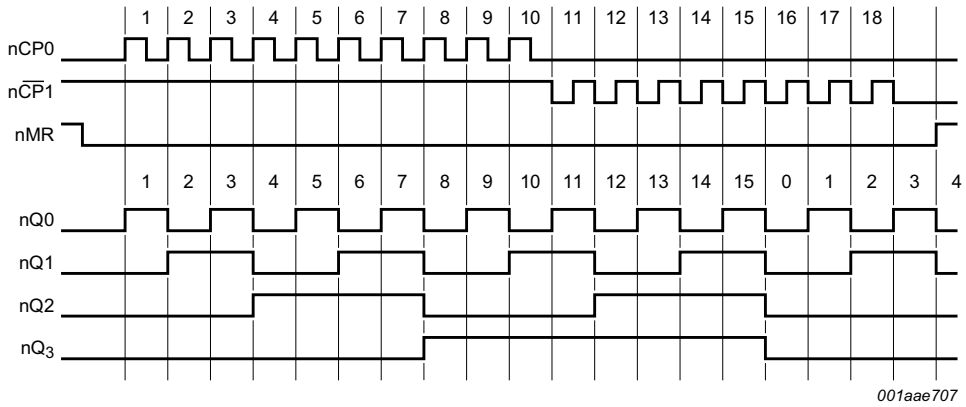

Fig 2. Timing diagram

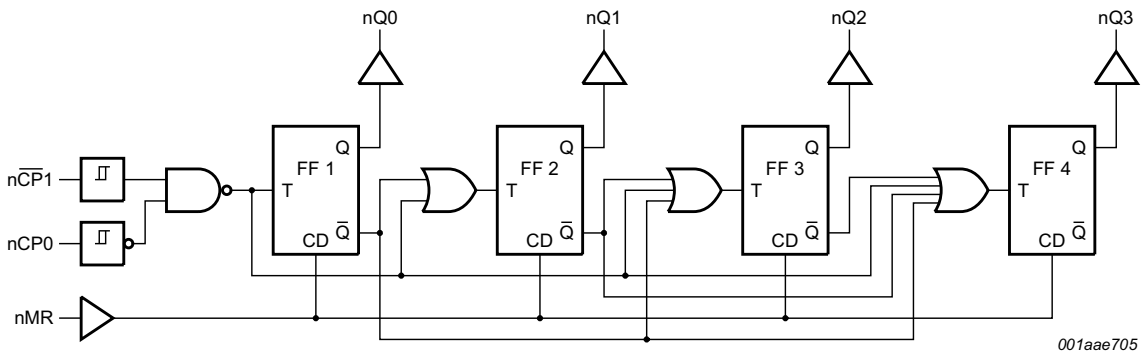

Fig 3. Logic diagram for one counter

All information provided in this document is subject to legal disclaimers.

© NXP Semiconductors N.V. 2016. All rights reserved.

5. Pinning information

5.1 Pinning

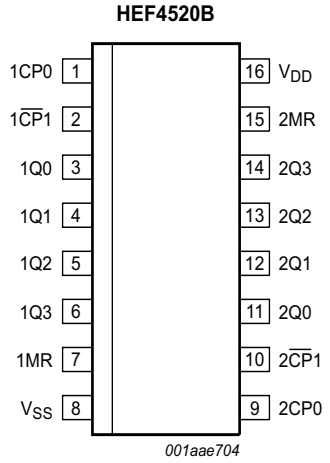

Fig 4. Pin configuration

5.2 Pin description

Table 2. Pin description

Symbol	Pin	Description
1CP0, 2CP0	1, 9	clock input (LOW-to-HIGH triggered)
1$\overline{CP}$1, 2$\overline{CP}$1	2, 10	clock input (HIGH-to-LOW triggered)
1Q0 to 1Q3	3, 4, 5, 6	output
1MR, 2MR	7, 15	master reset input
V_{SS}	8	ground supply voltage
2Q0 to 2Q3	11, 12, 13, 14	output
V_{DD}	16	supply voltage

6. Functional description

Table 3. Function table[1]

nCP0	n$\overline{CP}$1	nMR	Mode
↑	H	L	counter advances
L	↓	L	counter advances
↓	X	L	no change
X	↑	L	no change
↑	L	L	no change
H	↓	L	no change
X	X	H	nQ0 to nQ3 = LOW

[1] H = HIGH voltage level; L = LOW voltage level; X = don’t care; ↑ = positive-going transition; ↓ = negative-going transition.

All information provided in this document is subject to legal disclaimers.

© NXP Semiconductors N.V. 2016. All rights reserved.

7. Limiting values

Table 4. Limiting values

In accordance with the Absolute Maximum Rating System (IEC 60134).

Symbol	Parameter	Conditions	Min	Max	Unit
V_{DD}	supply voltage		–0.5	+18	V
I_{IK}	input clamping current	V_I < –0.5 V or V_I > V_{DD} + 0.5 V	-	±10	mA
V_I	input voltage		–0.5	V_{DD} + 0.5	V
I_{OK}	output clamping current	V_O < –0.5 V or V_O > V_{DD} + 0.5 V	-	±10	mA
$I_{I/O}$	input/output current		-	±10	mA
I_{DD}	supply current		-	50	mA
T_{stg}	storage temperature	per output	–65	+150	°C
T_{amb}	ambient temperature		–40	+85	°C
P_{tot}	total power dissipation	SO16 package [1]	-	500	mW
P	power dissipation		-	100	mW

[1] For SO16 package: P_{tot} derates linearly with 8 mW/K above 70 °C.

8. Recommended operating conditions

Table 5. Recommended operating conditions

Symbol	Parameter	Conditions	Min	Typ	Max	Unit
V_{DD}	supply voltage		3	-	15	V
V_I	input voltage		0	-	V_{DD}	V
T_{amb}	ambient temperature	in free air	–40	-	+85	°C
Δt/ΔV	input transition rise and fall rate	V_{DD} = 5 V	-	-	3.75	μs/V
		V_{DD} = 10 V	-	-	0.5	μs/V
		V_{DD} = 15 V	-	-	0.08	μs/V

All information provided in this document is subject to legal disclaimers.

© NXP Semiconductors N.V. 2016. All rights reserved.

9. Static characteristics

Table 6. Static characteristics

V_{SS} = 0 V; V_I = V_{SS} or V_{DD} unless otherwise specified.

Symbol	Parameter	Conditions	V_{DD}	T_{amb} = –40 °C		T_{amb} = 25 °C		T_{amb} = 85 °C		Unit
				Min	Max	Min	Max	Min	Max	
V_{IH}	HIGH-level input voltage	$\|I_O\|$ < 1 μA	5 V	3.5	-	3.5	-	3.5	-	V
			10 V	7.0	-	7.0	-	7.0	-	V
			15 V	11.0	-	11.0	-	11.0	-	V
V_{IL}	LOW-level input voltage	$\|I_O\|$ < 1 μA	5 V	-	1.5	-	1.5	-	1.5	V
			10 V	-	3.0	-	3.0	-	3.0	V
			15 V	-	4.0	-	4.0	-	4.0	V
V_{OH}	HIGH-level output voltage	$\|I_O\|$ < 1 μA; V_I = V_{SS} or V_{DD}	5 V	4.95	-	4.95	-	4.95	-	V
			10 V	9.95	-	9.95	-	9.95	-	V
			15 V	14.95	-	14.95	-	14.95	-	V
V_{OL}	LOW-level output voltage	$\|I_O\|$ < 1 μA; V_I = V_{SS} or V_{DD}	5 V	-	0.05	-	0.05	-	0.05	V
			10 V	-	0.05	-	0.05	-	0.05	V
			15 V	-	0.05	-	0.05	-	0.05	V
I_{OH}	HIGH-level output current	V_O = 2.5 V	5 V	-	–1.7	-	–1.4	-	–1.1	mA
		V_O = 4.6 V	5 V	-	–0.52	-	–0.44	-	–0.36	mA
		V_O = 9.5 V	10 V	-	–1.3	-	–1.1	-	–0.9	mA
		V_O = 13.5 V	15 V	-	–3.6	-	–3.0	-	–2.4	mA
I_{OL}	LOW-level output current	V_O = 0.4 V	5 V	0.52	-	0.44	-	0.36	-	mA
		V_O = 0.5 V	10 V	1.3	-	1.1	-	0.9	-	mA
		V_O = 1.5 V	15 V	3.6	-	3.0	-	2.4	-	mA
I_I	input leakage current	V_{DD} = 15 V	15 V	-	±0.3	-	±0.3	-	±1.0	μA
I_{DD}	supply current	I_O = 0 A; V_I = V_{SS} or V_{DD}	5 V	-	20	-	20	-	150	μA
			10 V	-	40	-	40	-	300	μA
			15 V	-	80	-	80	-	600	μA
C_I	input capacitance		-	-	-	-	7.5	-	-	pF

10. Dynamic characteristics

Table 7. Dynamic characteristics

V_{SS} = 0 V; T_{amb} = 25 °C; for test circuit see Figure 6; unless otherwise specified.

Symbol	Parameter	Conditions	V_{DD}	Extrapolation formula	Min	Typ	Max	Unit
t_{PHL}	HIGH to LOW propagation delay	nCP0, $n\overline{CP1}$ → nQn; see Figure 5	5 V [1]	83 ns + (0.55 ns/pF)C_L	-	110	220	ns
			10 V	39 ns + (0.23 ns/pF)C_L	-	50	100	ns
			15 V	32 ns + (0.16 ns/pF)C_L	-	40	80	ns
		nMR → nQn; see Figure 5	5 V	48 ns + (0.55 ns/pF)C_L	-	75	150	ns
			10 V	24 ns + (0.23 ns/pF)C_L	-	35	70	ns
			15 V	17 ns + (0.16 ns/pF)C_L	-	25	50	ns

All information provided in this document is subject to legal disclaimers.

© NXP Semiconductors N.V. 2016. All rights reserved.

Table 7. Dynamic characteristics *...continued*

V_{SS} = 0 V; T_{amb} = 25 °C; for test circuit see Figure 6; unless otherwise specified.

Symbol	Parameter	Conditions	V_{DD}	Extrapolation formula	Min	Typ	Max	Unit
t_{PLH}	LOW to HIGH propagation delay	nCP0, $n\overline{CP}1$ → nQn; see Figure 5	5 V [1]	83 ns + (0.55 ns/pF)C_L	-	110	220	ns
			10 V	39 ns + (0.23 ns/pF)C_L	-	50	100	ns
			15 V	32 ns + (0.16 ns/pF)C_L	-	40	80	ns
t_t	transition time	nQn; see Figure 5	5 V [1]	10 ns + (1.00 ns/pF)C_L	-	60	120	ns
			10 V	9 ns + (0.42 ns/pF)C_L	-	30	60	ns
			15 V	6 ns + (0.28 ns/pF)C_L	-	20	40	ns
t_W	pulse width	nCP0 input LOW; minimum width; see Figure 5	5 V		60	30	-	ns
			10 V		30	15	-	ns
			15 V		20	10	-	ns
		$n\overline{CP}1$ input HIGH; minimum width; see Figure 5	5 V		60	30	-	ns
			10 V		30	15	-	ns
			15 V		20	10	-	ns
		nMR input HIGH; minimum width; see Figure 5	5 V		30	15	-	ns
			10 V		20	10	-	ns
			15 V		16	8	-	ns
t_{su}	set-up time	nCP0 → $n\overline{CP}1$; see Figure 5	5 V		50	25	-	ns
			10 V		30	15	-	ns
			15 V		20	10	-	ns
		$n\overline{CP}1$ → nCP0; see Figure 5	5 V		50	25	-	ns
			10 V		30	15	-	ns
			15 V		20	10	-	ns
t_{rec}	recovery time	see Figure 5	5 V		50	25	-	ns
			10 V		30	15	-	ns
			15 V		20	10	-	ns
f_{max}	maximum frequency	nCP0, $n\overline{CP}1$; see Figure 5	5 V		8	16	-	MHz
			10 V		15	30	-	MHz
			15 V		20	40	-	MHz

[1] The typical values of the propagation delay and transition times are calculated from the extrapolation formulas shown (C_L in pF).

Table 8. Dynamic power dissipation P_D

P_D can be calculated from the formulas shown. V_{SS} = 0 V; $t_r = t_f \leq 20$ ns; T_{amb} = 25 °C.

Symbol	Parameter	V_{DD}	Typical formula for P_D (μW)	Where:
P_D	dynamic power dissipation	5 V	$P_D = 850 \times f_i + \Sigma(f_o \times C_L) \times V_{DD}^2$	f_i = input frequency in MHz, f_o = output frequency in MHz, C_L = output load capacitance in pF, V_{DD} = supply voltage in V, $\Sigma(f_o \times C_L)$ = sum of the outputs.
		10 V	$P_D = 3800 \times f_i + \Sigma(f_o \times C_L) \times V_{DD}^2$	
		15 V	$P_D = 10200 \times f_i + \Sigma(f_o \times C_L) \times V_{DD}^2$	

All information provided in this document is subject to legal disclaimers.

© NXP Semiconductors N.V. 2016. All rights reserved.

11. Waveforms

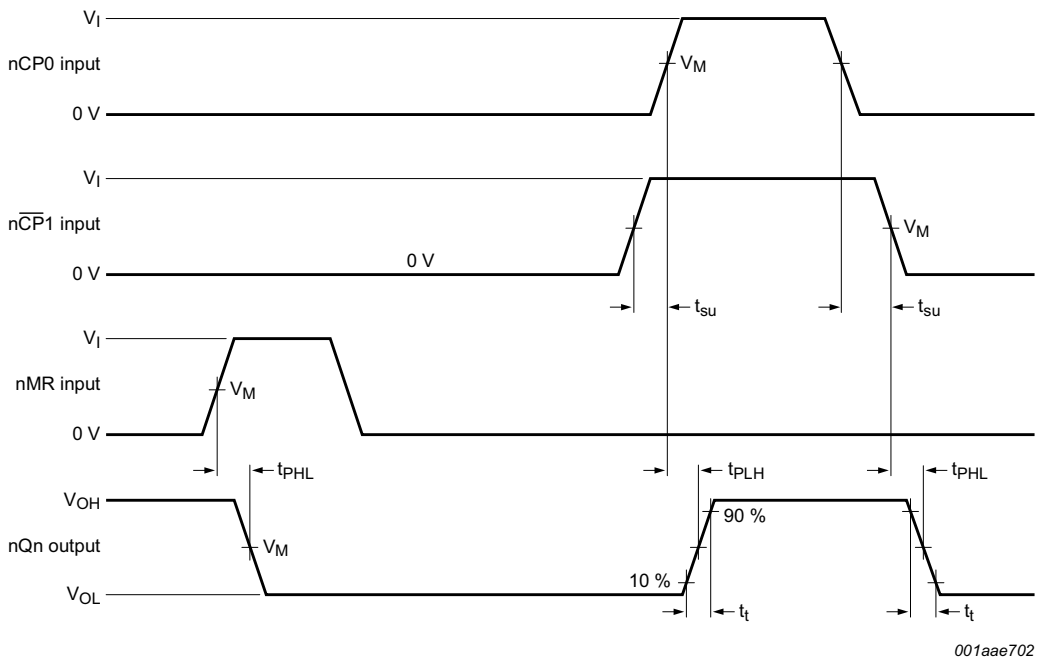

a. nCP0 and nCP1 set-up times, propagation delays and output transition times

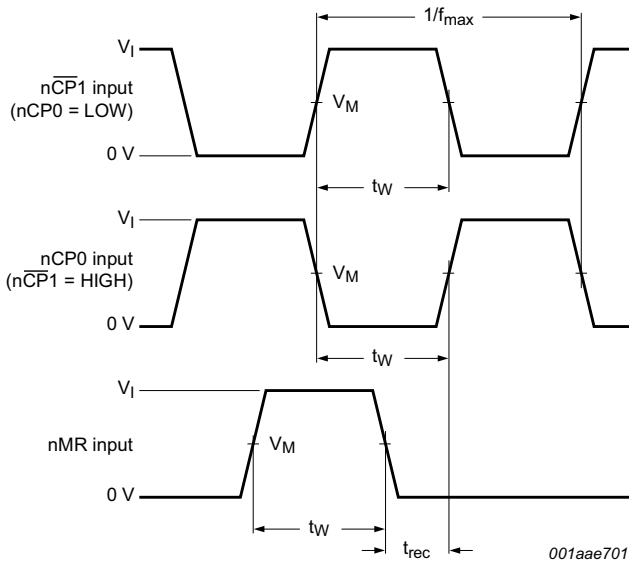

b. nMR recovery time, minimum nCP0, nCP1, and nMR pulse widths and maximum frequency

Measurement points are given in Table 9.

The logic levels V_{OH} and V_{OL} are typical output voltage levels that occur with the output load.

Fig 5. Waveforms showing measurements for switching times

All information provided in this document is subject to legal disclaimers.

© NXP Semiconductors N.V. 2016. All rights reserved.

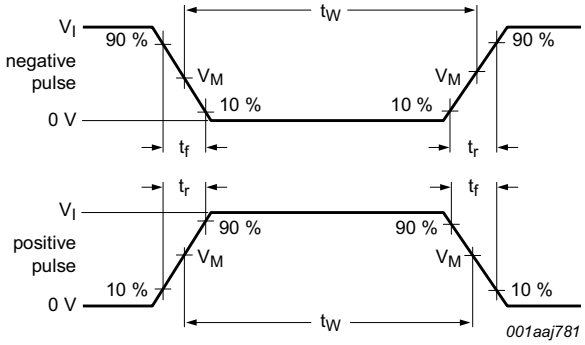

a. Input waveforms

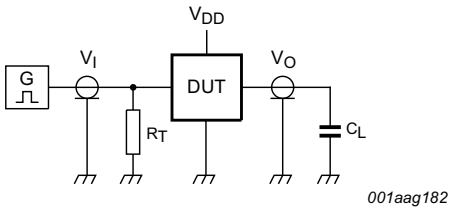

b. Test circuit

Test data is given in Table 9.

Definitions for test circuit:

DUT = Device Under Test;

C_L = Load capacitance including jig and probe capacitance;

R_T = Termination resistance should be equal to output impedance Z_o of the pulse generator.

Fig 6. Test circuit for measuring switching times

Table 9. Measurement points and test data

Supply voltage	Input			Load
V_{DD}	V_I	V_M	t_r, t_f	C_L
5 V to 15 V	V_{DD}	$0.5V_I$	≤ 20 ns	50 pF

All information provided in this document is subject to legal disclaimers.

© NXP Semiconductors N.V. 2016. All rights reserved.

12. Package outline

SO16: plastic small outline package; 16 leads; body width 3.9 mm **SOT109-1**

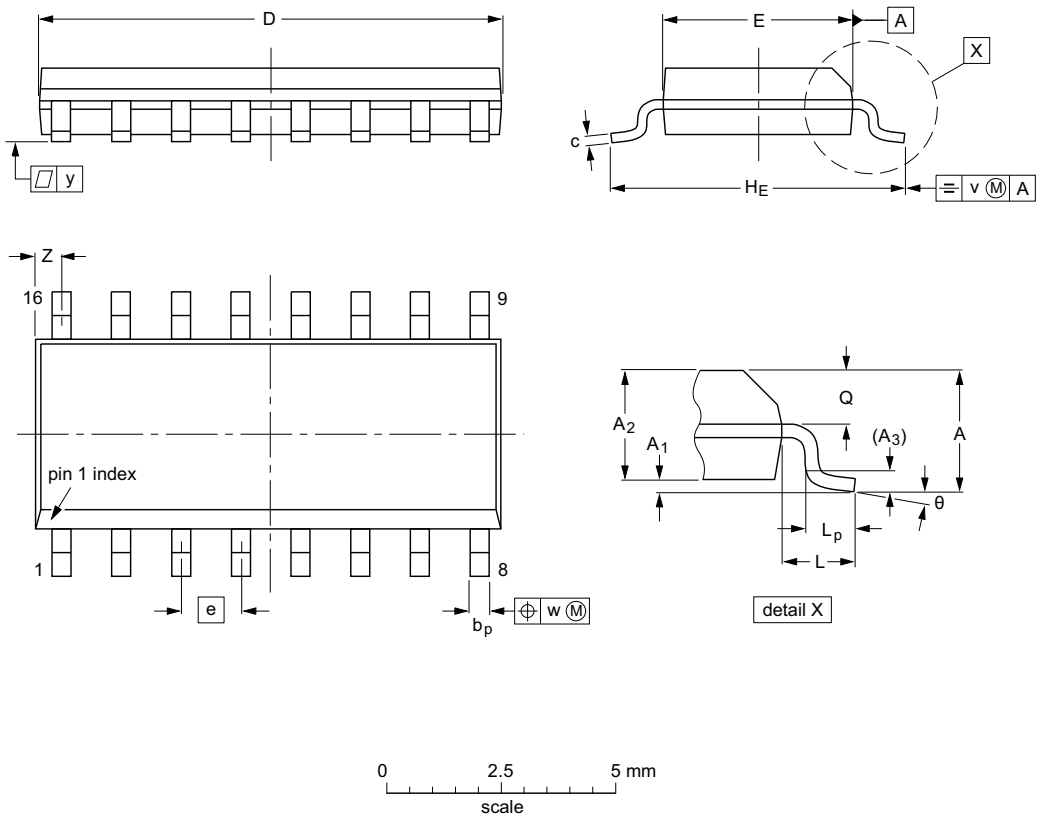

DIMENSIONS (inch dimensions are derived from the original mm dimensions)

UNIT	A max.	A_1	A_2	A_3	b_p	c	D(1)	E(1)	e	H_E	L	L_p	Q	v	w	y	Z(1)	θ
mm	1.75	0.25 0.10	1.45 1.25	0.25	0.49 0.36	0.25 0.19	10.0 9.8	4.0 3.8	1.27	6.2 5.8	1.05	1.0 0.4	0.7 0.6	0.25	0.25	0.1	0.7 0.3	8° 0°
inches	0.069	0.010 0.004	0.057 0.049	0.01	0.019 0.014	0.0100 0.0075	0.39 0.38	0.16 0.15	0.05	0.244 0.228	0.041	0.039 0.016	0.028 0.020	0.01	0.01	0.004	0.028 0.012	

Note

1. Plastic or metal protrusions of 0.15 mm (0.006 inch) maximum per side are not included.

OUTLINE VERSION	REFERENCES				EUROPEAN PROJECTION	ISSUE DATE
	IEC	JEDEC	JEITA			
SOT109-1	076E07	MS-012				~~99-12-27~~ 03-02-19

Fig 7. Package outline SOT109-1 (SO16)

All information provided in this document is subject to legal disclaimers.

© NXP Semiconductors N.V. 2016. All rights reserved.

13. Revision history

Table 10. Revision history

Document ID	Release date	Data sheet status	Change notice	Supersedes
HEF4520B v.7	20160330	Product data sheet	-	HEF4520B v.6
Modifications:	• Type number HEF4520BP (SOT38-4) removed.			
HEF4520B v.6	20111118	Product data sheet	-	HEF4520B v.5
Modifications:	• Section Applications removed • Table 6: I_{OH} minimum values changed to maximum			
HEF4520B v.5	20091210	Product data sheet	-	HEF4520B v.4
HEF4520B v.4	20090828	Product data sheet	-	HEF4520B_CNV v.3
HEF4520B_CNV v.3	19950101	Product specification	-	HEF4520B_CNV v.2
HEF4520B_CNV v.2	19950101	Product specification	-	-

All information provided in this document is subject to legal disclaimers.

© NXP Semiconductors N.V. 2016. All rights reserved.

14. Legal information

14.1 Data sheet status

Document status[1][2]	Product status[3]	Definition
Objective [short] data sheet	Development	This document contains data from the objective specification for product development.
Preliminary [short] data sheet	Qualification	This document contains data from the preliminary specification.
Product [short] data sheet	Production	This document contains the product specification.

[1] Please consult the most recently issued document before initiating or completing a design.

[2] The term 'short data sheet' is explained in section "Definitions".

[3] The product status of device(s) described in this document may have changed since this document was published and may differ in case of multiple devices. The latest product status information is available on the Internet at URL http://www.nxp.com.

14.2 Definitions

Draft — The document is a draft version only. The content is still under internal review and subject to formal approval, which may result in modifications or additions. NXP Semiconductors does not give any representations or warranties as to the accuracy or completeness of information included herein and shall have no liability for the consequences of use of such information.

Short data sheet — A short data sheet is an extract from a full data sheet with the same product type number(s) and title. A short data sheet is intended for quick reference only and should not be relied upon to contain detailed and full information. For detailed and full information see the relevant full data sheet, which is available on request via the local NXP Semiconductors sales office. In case of any inconsistency or conflict with the short data sheet, the full data sheet shall prevail.

Product specification — The information and data provided in a Product data sheet shall define the specification of the product as agreed between NXP Semiconductors and its customer, unless NXP Semiconductors and customer have explicitly agreed otherwise in writing. In no event however, shall an agreement be valid in which the NXP Semiconductors product is deemed to offer functions and qualities beyond those described in the Product data sheet.

14.3 Disclaimers

Limited warranty and liability — Information in this document is believed to be accurate and reliable. However, NXP Semiconductors does not give any representations or warranties, expressed or implied, as to the accuracy or completeness of such information and shall have no liability for the consequences of use of such information. NXP Semiconductors takes no responsibility for the content in this document if provided by an information source outside of NXP Semiconductors.

In no event shall NXP Semiconductors be liable for any indirect, incidental, punitive, special or consequential damages (including - without limitation - lost profits, lost savings, business interruption, costs related to the removal or replacement of any products or rework charges) whether or not such damages are based on tort (including negligence), warranty, breach of contract or any other legal theory.

Notwithstanding any damages that customer might incur for any reason whatsoever, NXP Semiconductors' aggregate and cumulative liability towards customer for the products described herein shall be limited in accordance with the *Terms and conditions of commercial sale* of NXP Semiconductors.

Right to make changes — NXP Semiconductors reserves the right to make changes to information published in this document, including without limitation specifications and product descriptions, at any time and without notice. This document supersedes and replaces all information supplied prior to the publication hereof.

Suitability for use — NXP Semiconductors products are not designed, authorized or warranted to be suitable for use in life support, life-critical or safety-critical systems or equipment, nor in applications where failure or malfunction of an NXP Semiconductors product can reasonably be expected to result in personal injury, death or severe property or environmental damage. NXP Semiconductors and its suppliers accept no liability for inclusion and/or use of NXP Semiconductors products in such equipment or applications and therefore such inclusion and/or use is at the customer's own risk.

Applications — Applications that are described herein for any of these products are for illustrative purposes only. NXP Semiconductors makes no representation or warranty that such applications will be suitable for the specified use without further testing or modification.

Customers are responsible for the design and operation of their applications and products using NXP Semiconductors products, and NXP Semiconductors accepts no liability for any assistance with applications or customer product design. It is customer's sole responsibility to determine whether the NXP Semiconductors product is suitable and fit for the customer's applications and products planned, as well as for the planned application and use of customer's third party customer(s). Customers should provide appropriate design and operating safeguards to minimize the risks associated with their applications and products.

NXP Semiconductors does not accept any liability related to any default, damage, costs or problem which is based on any weakness or default in the customer's applications or products, or the application or use by customer's third party customer(s). Customer is responsible for doing all necessary testing for the customer's applications and products using NXP Semiconductors products in order to avoid a default of the applications and the products or of the application or use by customer's third party customer(s). NXP does not accept any liability in this respect.

Limiting values — Stress above one or more limiting values (as defined in the Absolute Maximum Ratings System of IEC 60134) will cause permanent damage to the device. Limiting values are stress ratings only and (proper) operation of the device at these or any other conditions above those given in the Recommended operating conditions section (if present) or the Characteristics sections of this document is not warranted. Constant or repeated exposure to limiting values will permanently and irreversibly affect the quality and reliability of the device.

Terms and conditions of commercial sale — NXP Semiconductors products are sold subject to the general terms and conditions of commercial sale, as published at http://www.nxp.com/profile/terms, unless otherwise agreed in a valid written individual agreement. In case an individual agreement is concluded only the terms and conditions of the respective agreement shall apply. NXP Semiconductors hereby expressly objects to applying the customer's general terms and conditions with regard to the purchase of NXP Semiconductors products by customer.

No offer to sell or license — Nothing in this document may be interpreted or construed as an offer to sell products that is open for acceptance or the grant, conveyance or implication of any license under any copyrights, patents or other industrial or intellectual property rights.

All information provided in this document is subject to legal disclaimers.

© NXP Semiconductors N.V. 2016. All rights reserved.

Export control — This document as well as the item(s) described herein may be subject to export control regulations. Export might require a prior authorization from competent authorities.

Non-automotive qualified products — Unless this data sheet expressly states that this specific NXP Semiconductors product is automotive qualified, the product is not suitable for automotive use. It is neither qualified nor tested in accordance with automotive testing or application requirements. NXP Semiconductors accepts no liability for inclusion and/or use of non-automotive qualified products in automotive equipment or applications.

In the event that customer uses the product for design-in and use in automotive applications to automotive specifications and standards, customer (a) shall use the product without NXP Semiconductors' warranty of the product for such automotive applications, use and specifications, and (b) whenever customer uses the product for automotive applications beyond NXP Semiconductors' specifications such use shall be solely at customer's own risk, and (c) customer fully indemnifies NXP Semiconductors for any liability, damages or failed product claims resulting from customer design and use of the product for automotive applications beyond NXP Semiconductors' standard warranty and NXP Semiconductors' product specifications.

Translations — A non-English (translated) version of a document is for reference only. The English version shall prevail in case of any discrepancy between the translated and English versions.

14.4 Trademarks

Notice: All referenced brands, product names, service names and trademarks are the property of their respective owners.

15. Contact information

For more information, please visit: **http://www.nxp.com**

For sales office addresses, please send an email to: **salesaddresses@nxp.com**

All information provided in this document is subject to legal disclaimers.

© NXP Semiconductors N.V. 2016. All rights reserved.

16. Contents

1 General description 1
2 Features and benefits 1
3 Ordering information 1
4 Functional diagram 2
5 Pinning information 3
5.1 Pinning 3
5.2 Pin description 3
6 Functional description 3
7 Limiting values 4
8 Recommended operating conditions 4
9 Static characteristics 5
10 Dynamic characteristics 5
11 Waveforms 7
12 Package outline 9
13 Revision history 10
14 Legal information 11
14.1 Data sheet status 11
14.2 Definitions 11
14.3 Disclaimers 11
14.4 Trademarks 12
15 Contact information 12
16 Contents 13

Please be aware that important notices concerning this document and the product(s) described herein, have been included in section 'Legal information'.

© NXP Semiconductors N.V. 2016. All rights reserved.

For more information, please visit: http://www.nxp.com
For sales office addresses, please send an email to: salesaddresses@nxp.com

Date of release: 30 March 2016
Document identifier: HEF4520B