THIS DRAWING IS A CONTROLLED DOCUMENT.

REVISIONS

P	LTR	DESCRIPTION	DATE	DWN	APVD
	BA2	ECR-17-013465	13SEP2017	RK	TN

NOTES:

1. FOR FURTHER INFORMATION SEE DATA SHEET FOR C SERIES-HIGH POWER RESISTORS.

2. WEIGHT 0.600 Kg PER 100 PIECES.

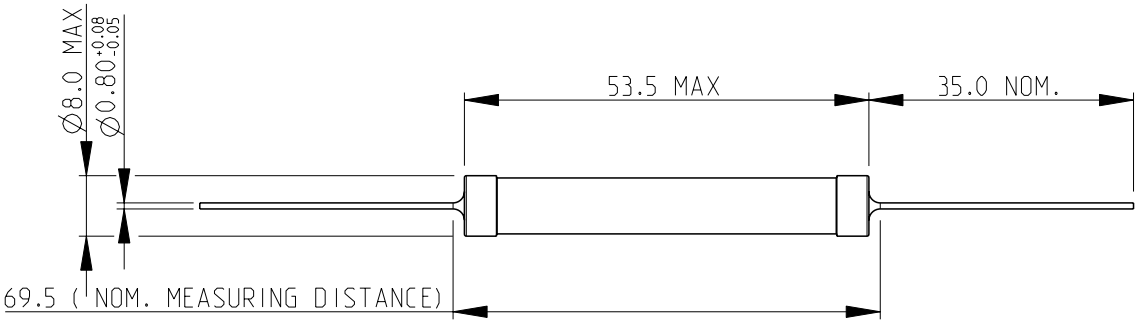

RoHS Compliant

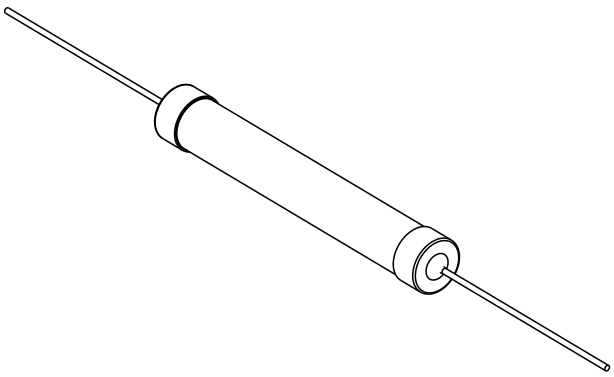

THIS DRAWING IS UNPUBLISHED. © COPYRIGHT 2008 BY - ALL RIGHTS RESERVED. RELEASED FOR PUBLICATION 2008

DIMENSIONS: mm

TOLERANCES UNLESS OTHERWISE SPECIFIED:

0 PLC	±0.2
1 PLC	±0.1
2 PLC	±
3 PLC	±
4 PLC	±
ANGLES	±5°

DWN	SUBHASH.M	16-Sep-08
CHK	PRAKASH.S	16-Sep-08
APVD	STEPHEN.P	16-Sep-08

PRODUCT SPEC: -

APPLICATION SPEC: -

WEIGHT: -

MATERIAL: -

FINISH: -

TE Connectivity

NAME: HIGH POWER RESISTORS SERIES C14

SIZE	CAGE CODE	DRAWING NO	RESTRICTED TO
A4	00779	C-1623774	-

CUSTOMER DRAWING

SCALE 1:1 | SHEET 1 OF 1 | REV BA2

1469-35 (3/13)